iJRASET
International Journal For Research in
Applied Science and Engineering Technology

INTERNATIONAL JOURNAL FOR RESEARCH

IN APPLIED SCIENCE & ENGINEERING TECHNOLOGY

Volume: 5 **Issue:** V **Month of publication:** May 2017

DOI:

www.ijraset.com

Call: 08813907089 | E-mail ID: ijraset@gmail.com

Volume 5 Issue V, May 2017
ISSN: 2321-9653
International Journal for Research in Applied Science & Engineering Technology (IJRASET)

Modification for Ductile Detailing of Beam Column Joints

Soumya. A. T[1], Bini. B[2], Athira. P. S[3]
[1,2]PG Student, Department of Civil Engineering, APJ Abdul Kalam Technological University

Abstract: Earthquake resistant buildings are necessary to reduce the damage caused to structures during devastating earthquakes. One of the characteristics of earthquake resistant buildings is having an adequate design on the beam-column joint. Generally, when large forces occur during earthquakes, joints are severely damaged which endangers the entire structure. Seismic design focuses on the ductility of a frame as the main structure to resist the lateral force.

The beam–column joints with inadequate or no transverse shear reinforcement have proved deficient and are likely to experience brittle shear failure during earthquake motions. So ductile detailing of a beam column joint is very important for its better performance under the seismic loads.

But it is noted that the anchorage requirements for the beam longitudinal reinforcement bar and the joint confinement are having main issues related to problems of congestion of reinforcement in the beam–column connections. There are lots of practical difficulties in the execution of such conventional designs. With the development of new technologies and materials alternatives for these conventional types of joint reinforcement is possible. The project focuses in the design and analysis using the software ANSYS 15, for an alternative joint reinforcement with better or equivalent performance. An attempt has been made to evaluate the performance of the exterior beam– Column joint by replacing the 90° standard bent bar anchorages By T-type mechanical anchorage.

Keywords— headed bars; beam column joint

I. INTRODUCTION

Earthquake resistant buildings are necessary to reduce the damage caused to structures during devastating earthquakes. One of the characteristics of earthquake resistant buildings is having an adequate design on the beam-column joint.In the analysis of reinforced concrete moment resisting frames the joints are generally assumed as rigid. In Indian practice, the joint is usually neglected for specific design with attention being restricted to provision of sufficient anchorage for beam longitudinal reinforcement. This may be acceptable when the frame is not subjected to lateral loads like earthquake. There have been many catastrophic failures reported in the past earthquakes, in particular with Turkey and Taiwan earthquakes occurred in 1999, which have been attributed to beam-column joints. Generally, when large forces occur during earthquakes, joints are severely damaged. Unsafe design and detailing within the joint region endangers the entire structure. The beam-column joints must be designed to resist earthquake effects. Hence the adjoining flexural members (beams and columns) could develop their inelastic capacities to dissipate high seismic energy. Seismic design focuses on the ductility of a frame as the main structure to resist the lateral force. This condition is determined by the structural members, especially beams and columns. Therefore, the joint must be sufficiently ductile till beams and columns achieve their load capacity. During the inelastic deformation of the beams and columns outside the elastic range, large deformation will be involved resulting in clearly visible damage. These force effects are called plastic hinges. The inelastic rotation spreads at certain areas. When the joint suffers inelastic rotation, the ductility capacity of all members is transferred to the joint so that the damage at the joint is will be substantial and should be avoided. The formation of a plastic hinge is expected, where permitted structural damage occurs. Thus, it is very important in seismic design that the damage of a plastic hinges occurs in the beam, rather than in the column.

During horizontal earthquakes, moments and shear forces acting on the beams and columns of the frame building are resulting in internal-vertical and horizontal forces on the face of the joint core. The internal forces produce a resultant acting in the joint core, either a diagonal tensile or compression stress. Diagonal tensile stresses and compressive forces result in cracking and crushing of the concrete core. If the shear resistance at the joint core is insufficient, there will be failures along the diagonal of the joint core. The beam–column joints with inadequate or no transverse shear reinforcement have proved deficient and are likely to experience brittle shear failure during earthquake motions. So ductile detailing of a beam column joint is very important for its better performance under the seismic loads.

But it is noted that the anchorage requirements for the beam longitudinal reinforcement bar and the joint confinement are having

©IJRASET: All Rights are Reserved

Volume 5 Issue V, May 2017
ISSN: 2321-9653

main issues related to problems of congestion of reinforcement in the beam–column connections. There are lot of practical difficulties in the execution of such conventional designs. Various researches are carried out still to solve this problem of congestion. Here an attempt has been made to replace it with a combination of headed bar and steel fibers.

A. Headed bars

Headed reinforcing bars are standard lengths of reinforcement with heads (rectangular steel plates) attached at one or both ends, generally by means of friction welding. The size of the plate is chosen so that the bar is fully anchored by bearing of the plate on the surrounding concrete rather than by bond. This provides a very stiff form of anchorage, without the slip that may be associated with a conventional hook or bend on the end of the bar. The use of headed reinforcement obviously avoids the need to provide the usual hook or bend, thus significantly reducing congestion in the anchorage zone.

Fig 1**:** Headed bars

B. Steel fibers

When steel fibers are added to mortar, Portland cement concrete or refractory concrete, the flexural strength of the composite is increased from 25% to 100% - depending on the proportion of fibers added and the mix design. Steel fiber technology actually transforms a brittle material into a more ductile one.

Primary effects include

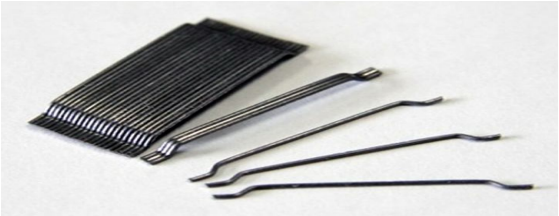

Fig 2**:** Steel fibers

II. LITERATURE REVIEW

S Rajagopal[1](2013)gave a solution to reduce the congestion at beam column joint. By replacing the standard 90° bent up bars by headed bar ,inclined cross bars and additional hair pin bars. The main aim of the study was to provide an alternative capable of improving the ductility and stiffness without compressing the strength. A comparative experimental study was done between specimens with conventional design and the proposed alternative. As per ACI-ASCE committee the joints are of two types type -1 and type -2 in which type-1 there is no inelastic deformations but type-2 has to be designed for the inelastic ranges that is the seismic beam column joints. The study was able to conclude that the proposed alternative was a viable replacement for conventional design

Xing-wen Liang [2](2016)studied the feasibility of using fiber reinforced concrete as a replacement for the normal concrete at the joint core zone. Under the seismic force one side of the joint core is in tension on one diagonal direction and compression on the other diagonal direction, hence they fail easily under shear. The numerical study was carried using Open Sees. Fiber reinforced concrete was provided at the joint ,beam ends and column ends. Fiber used was poly vinyl alcohol fiber. The study concluded that the FRC can effectively restrain crack widening and the damage caused by spalling of concrete. They were also found to improve the ultimate deformation capabilities

©IJRASET: All Rights are Reserved

Volume 5 Issue V, May 2017
ISSN: 2321-9653
International Journal for Research in Applied Science & Engineering Technology (IJRASET)

III. ANALYSIS

Finite element analysis (FEA) is a computerized method for predicting how a product reacts to real-world forces, vibration, heat, fluid flow, and other physical effects. Finite element analysis shows whether a product will break, wear out, or work the way it was designed. It is called analysis, but in the product development process, it is used to predict what is going to happen when the product is used.FEA software ANSYS has been used in this study.

A. Methodology

A column beam joint of geometry in the fig:3 is
selected based on various literature surveys. Then using the analytical FEA software ANSYS WORKBENCH the joint is modeled and analysed for the various cases under consideration as explained below. The study can be divided to 3 sections.

1) Joint with detailing as per the IS codes
2) The combination of headed bars combined with different percentages of fibers.

The performance of each cases are compared with the performance of joint as per the codes (section 1) under the quasi static cyclic loads. Then the most effective joint with equivalent performance is selected based on certain parameters such as load carrying capacity, stiffness, energy dissipation and ductility.

B. Material properties

1) Concrete-M30 concrete, Elastic Modulus=5000√fc, Poisson ratio=0.2
2) Steel- Elastic Modulus=20000MPa,Fe 415, Poisson ratio=.3

Headed bars- Headed reinforcing bars are standard lengths of reinforcement with heads (rectangular steel plates) attached at one or both ends, generally by means of friction welding. The size of the plate is chosen so that the bar is fully anchored by bearing of the plate on the surrounding concrete rather than by bond. This provides a very stiff form of anchorage, without the slip that may be associated with a conventional hook or bend on the end of the bar.Fe 540 bars are used for headed bars. Head size 80 x 45 x 20 mm is used for headed bar.

Steel fibers-When steel fibres are added to mortar, Portland cement concrete or refractory concrete, the flexural strength of the composite is increased from 25% to 100% - depending on the proportion of fibres added and the mix design. Steel fibre technology actually transforms a brittle material into a more ductile one you use in an equation. Double hooked steel fibers are used by modifying the properties of plain concrete with stress strain behavior calculated using following equation. [3]

$$\frac{\sigma}{f_{cf}} = \frac{\beta\left(\frac{\varepsilon}{\varepsilon_{pf}}\right)}{\beta - 1 + \left(\frac{\varepsilon}{\varepsilon_{pf}}\right)^{\beta}}$$

The stress strain curve is as shown in fig:3 for different percentage 1%,1.5%,2%,2.5%,3.5%

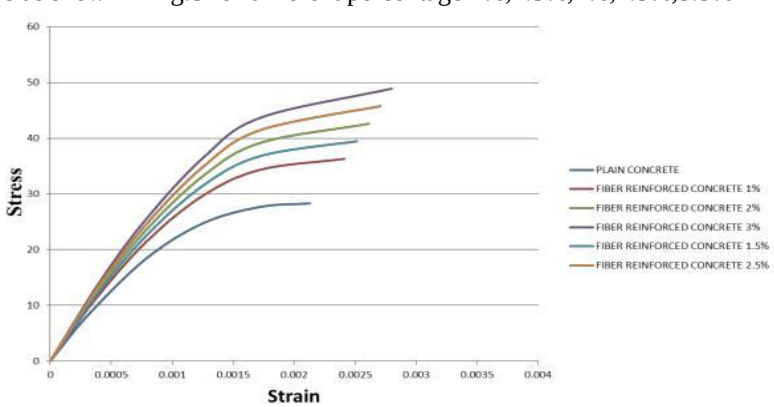

Fig 3**:** Steel fibers stress strain behaviouR

©IJRASET: All Rights are Reserved

Volume 5 Issue V, May 2017
ISSN: 2321-9653
International Journal for Research in Applied Science & Engineering Technology (IJRASET)

C. Elements used

The suitable elements are selected from the ANSYS library. Concrete and steel fiber reinforced concrete is modeled using Solid 65.steel bars are modeled using Link 180.

D. Geometry

The geometry of joint as in fig 3 is modeled using ANSYS software.

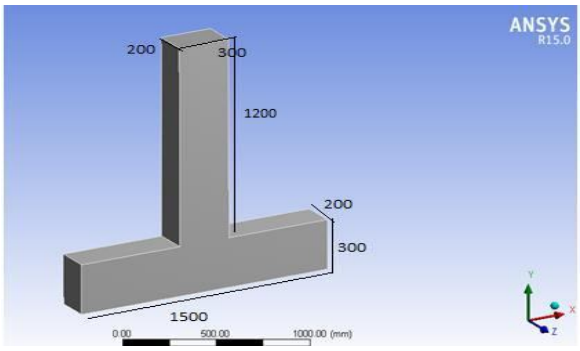

Fig 4**:** Geometry

The reinforcement model for section one of the study i.e., as per is13920 includes special reinforcements at closer spacing as given in fig 4.,which is then replaced in section 2 and 3 using headed bar and combination of headed bar and steel fibers respectively.

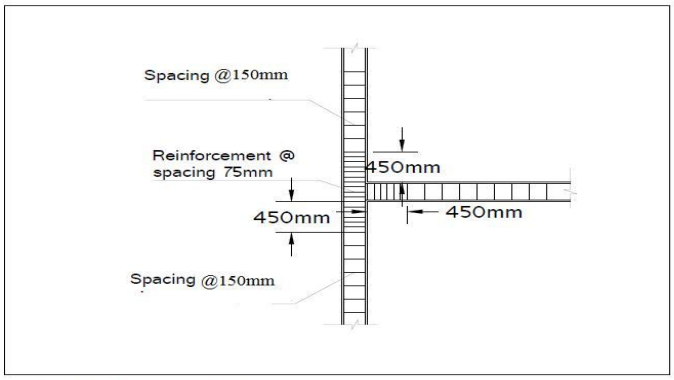

Fig 5: Reinforcement Geometry

For section two with headed bars and steel fiber reinforced concrete the geometry is as follows

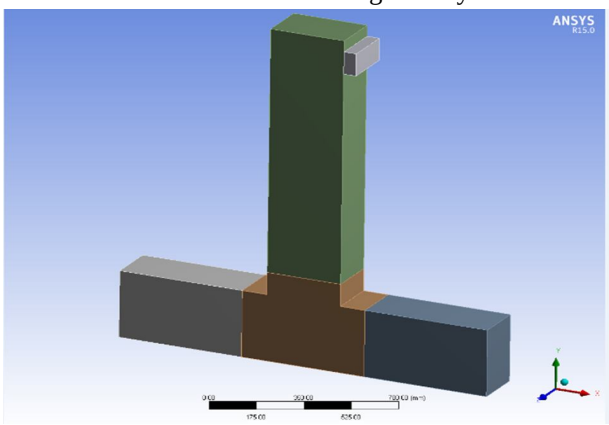

Fig 6: Geometry with SFRC

©IJRASET: All Rights are Reserved

Volume 5 Issue V, May 2017
ISSN: 2321-9653

E. Boundary and load conditions

During analysis, both ends of column are fixed. Modelling of the boundary conditions is often the most critical aspect in achieving sensible, reliable data from a finite element model. Quasi static cyclic loading with increasing amplitude up to 150kN applied as given in fig 6.it represents the nature of high seismic or wind loads.

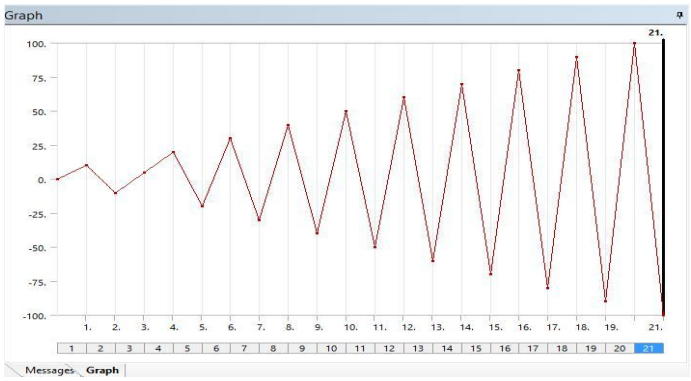

Fig 6: Load Applied

F. Results and discussions

The fig7 shows the stress developed in the joint after the analysing.

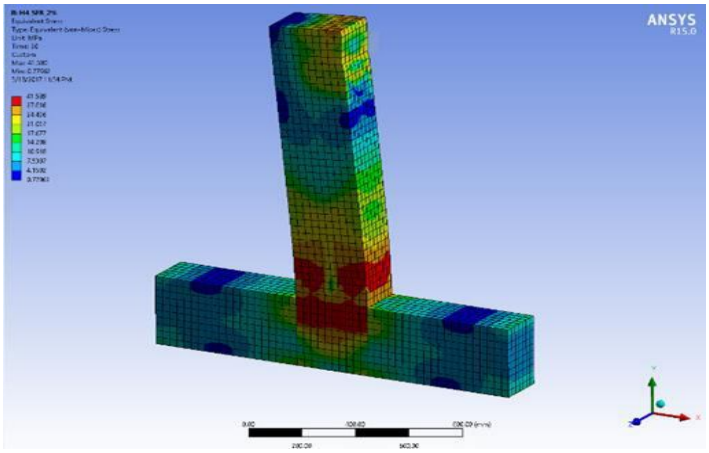

Fig 7: Stress at the joint

The results for the section one of study is as given in the table 1. The load deformation curve of the ductile joint in section 1 gives that the load carrying capacity is 81.84Kn. the stiffness of the joint is computed as the ratio of ultimate load and ultimate displacement. Ductility is the ratio of the ultimate displacement to yield displacement. And energy dissipation is calculated as the hysteresis curve area. This result serves as a benchmark for the further studies.

Tab 1: Result of Ductile Joint

Ultimate load	Ultimate displace-ment	stiffness	Energy dissi-pation	ductility
81.84	34.228	2.4	38009	5.1

©IJRASET: All Rights are Reserved

Volume 5 Issue V, May 2017
ISSN: 2321-9653

In section 2 of study the head of size 85 x 45 x20 mm is combined with 5 percentages of steel fibers the results are summarized in table 3.from the results it is observed that the optimum fiber percentage is 2%. As the load carrying capacity has little effect after that.All the other parameters of headed bar with 2% fiber reinforcement shows comparable results to that of the ductile detailed joint.

Tab2: Results Of Head Bar With Steel Fiber

Ultimate load	Ultimate displace-ment	stiffness	Energy dissi-pation	ductility
112.418	39.24	2.86	61854	4.9
114.8	38.8	2.95	64583	5.06
118.52	41.3	2.87	68492	5.16
118.76	40.6	2.8	71258	5.1
119	42.3	2.83	74568	5.2

IV. CONCLUSIONS

A. The load carrying capacity is increased by 45% with the proposed alternative. The load deformation curve of the ductile detailed and headed bar + 2% fiber is shown in fig.7

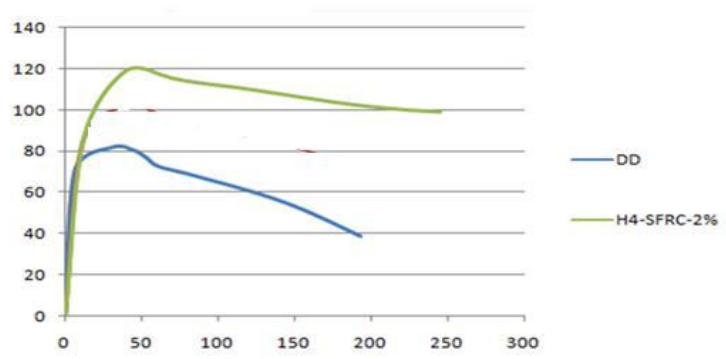

Fig 8**:** Load Deformation Curves

B. Various parameters of seismic response such as ductility, stiffness, energy dissipation, are well comparable to the ordinary ductile joint

C. The rate of stiffness degradation as given in fig 8 ,is similar for both ductile detailed and proposed alternative

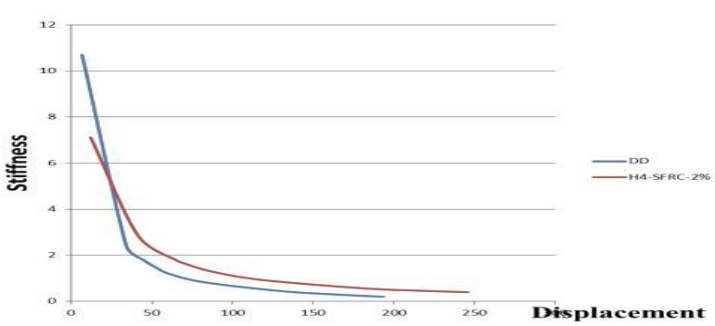

Fig 9: Stiffness Degradation

REFERENCES

[1] Is 13920
[2] S. Rajagopal , S. Prabavathy,, "Investigation on the seismic behavior of exterior beam–column joint using T-type mechanical anchorage with hair-clip

©IJRASET: All Rights are Reserved

Volume 5 Issue V, May 2017
ISSN: 2321-9653

bar",Elsevier

[3] Francesco Bencardino1; Lidia Rizzuti2; Giuseppe Spadea3; and Ramnath N. Swamy,,"Stress-Strain Behavior of Steel Fiber-Reinforced Concrete in Compression"ASCE

[4] Junichiro Niwa; Kabir Shakya; Koji Matsumoto; and Ken Watanabe,, "Experimental Study on the Possibility of Using Steel Fiber–Reinforced Concrete to Reduce Conventional Rebars in Beam-Column Joints",,,ASCE,,journal of material in civil engineerin

[5] Thomas H.-K. Kang, NilanjanMitra, San Luis Obispo,, "Headed Reinforcement Applications for Reinforced Concrete Beam- Column Connections",,ASCE structure congress

[6] Xing-wen Liang , Ying-jun Wang, Yi Tao, Ming-ke Deng,, "Seismic performance of fiber-reinforced concrete interior beam-column joints",,elsevie

[7] Bing Li,, "Seismic Vulnerability of Gravity-Load-Designed Beam-Column Connections",,ASCE Structural congress

[8] Nilanjan Mitra and Laura N. Lowes,, "Evaluation, Calibration, and Verification of a Reinforced Concrete Beam–Column Joint Model",,ASCE Structural journal

©IJRASET: All Rights are Reserved

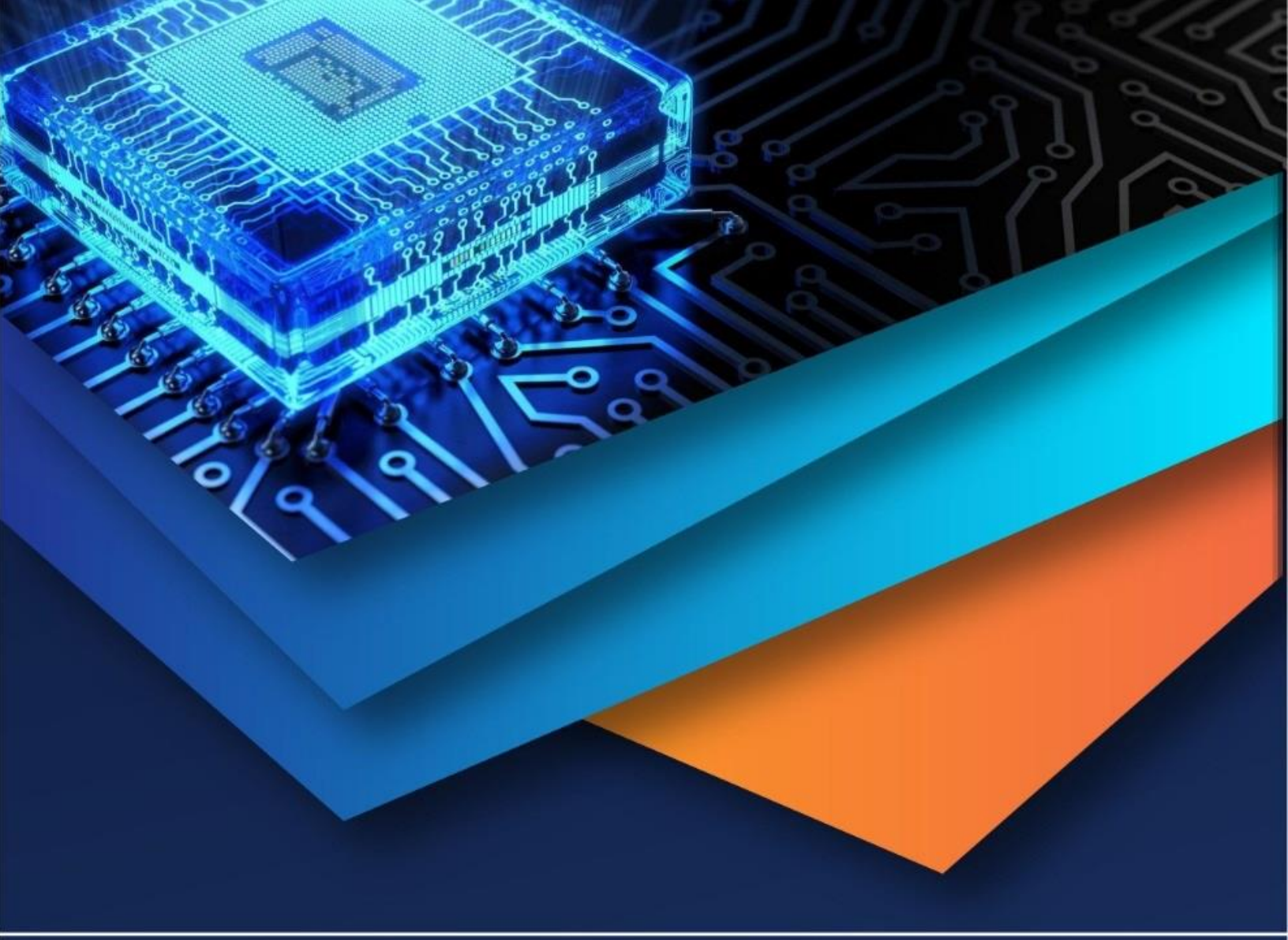

10.22214/IJRASET

45.98

IMPACT FACTOR: 7.129

IMPACT FACTOR: 7.429

INTERNATIONAL JOURNAL FOR RESEARCH

IN APPLIED SCIENCE & ENGINEERING TECHNOLOGY

Call : 08813907089 (24*7 Support on Whatsapp)