iJRASET
International Journal For Research in
Applied Science and Engineering Technology

INTERNATIONAL JOURNAL FOR RESEARCH

IN APPLIED SCIENCE & ENGINEERING TECHNOLOGY

Volume: 5 **Issue:** V **Month of publication:** May 2017

DOI:

www.ijraset.com

Call: 08813907089 | E-mail ID: ijraset@gmail.com

Volume 5 Issue V, May 2017
ISSN: 2321-9653
International Journal for Research in Applied Science & Engineering Technology (IJRASET)

Automatic Door Locking System Using Bluetooth Module

Lubhansh Kumar Bhute[1], Gagandeep Singh[2], Avinash Singh[3], Vikram Kansary[4], Preetam Rao Kale [5], Shailendra Singh[6]
UG Students[12345],Department of Electronics & Telecommuincation Emgineering,GDRCET,Bhilai,Chhattisgarh,India.
Asst.Professor[6] , Department of Electronics & Telecommuincation Emgineering,GDRCET,Bhilai,Chhattisgarh,India.

Abstract- Smart home automation system playes a major role which helps in reducing a work by using some technologies. The proposed work is to send a signal to door from a tablet or mobile devices by using bluetooth system. This allows the user to lock and unlock a door from inside or outside a house with a Bluetooth device available. The ideal purpose of the work is, if the door is not locked in first floor or in any other floor, The user from ground floor can open the door or unlock the door from mobile phone or laptop, which makes a person to reduce its energy or save time. The major components of the system are latest arduino board, Servo motor and a bluetooth module standard protocol for wireless communication.

I. INTRODUCTION

Smart home technology is the technologies that are used in homes with various apparatus converse over a local network. According to the Smart Homes Association, The best definition of smart home technology is: The combination of technology and services through home networking for a better value of living. This technology can be used to monitor, alert and execute according to the desired functions. Smart home technology makes automatic connection with the environment via Internet, telephone or regular fixed phones.

The main goal of this project is to develop a smart door lock system where an administrator or owner of an apartment or building can manage and send digital signal to other persons in order to allow them to access an apartment, building, or specific room in a building by using their NFC equipped smartphone or a NFC smartcard. The door microcontroller is controlled using the Android App. Android App interface with door microcontroller through Bluetooth. The Bluetooth technology operate over unlicensed 2.4GHz frequency, it can link digital devices within a range of 10m to 100m at the speed of up to 3Mbps but it depending on the Bluetooth device class. Home networking can also offer peace of mind. Whether you're at job or on holiday, the smart home will aware you to what's going on, and security system can be built to offer some help in emergency situations. For example, not only would a house owner be woken with warning of a fire alarm, the smart home would also release doors, call the fire department and light the pathway to safety.

II. DESIGN AND IMPLEMENTATION

A. There are several step in hardware design, i.e.

1) The implementation of Arduino Uno circuit
2) The implementation of Bluetooth circuit
3) The design of Solenoid door lock circuit
4) The design of power supply circuit
5) The design of driver relay circuit

Arduino microcontroller serves as the brain of the whole system. The Arduino microcontroller uses IC ATMega328P-PU and works by entering the program that has been created and ready for instant use. Bluetooth module used in this circuit is the type of HC-05, which requires a 3.3 V dc power drawn from the Arduino microcontroller circuit pin 3.3 V, Pin (TX 1) is a pathway transmit / send data on the Bluetooth module HC-05 with microcontroller and Pin (Rx 0) as the receive path / receiver data on the HC-05 Bluetooth module with microcontroller while the path GND (Ground) is a path connecting the data between HC-05 Bluetooth module with microcontroller circuit.

©IJRASET: All Rights are Reserved

Volume 5 Issue V, May 2017
ISSN: 2321-9653
International Journal for Research in Applied Science & Engineering Technology (IJRASET)

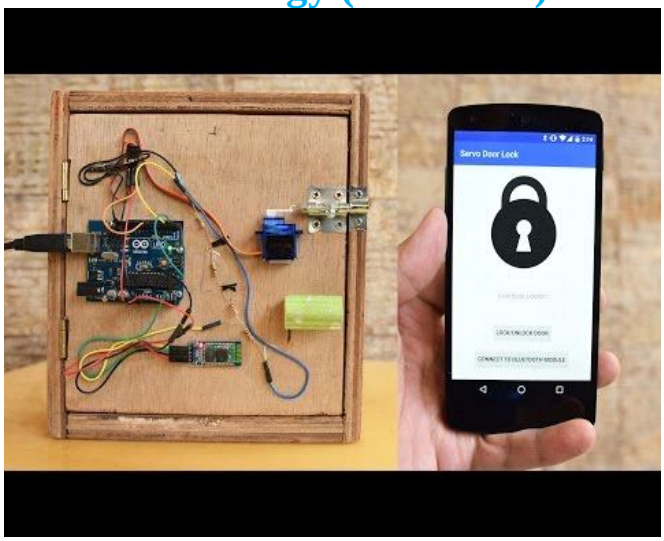

Programming language is used for the arduino microcontroller is C language. To run the program and incorporate the program to the microcontroller a software is used i.e. Arduino. The mechanism of device is give a digital keypad as input on the software on android smartphone first, if there is a command which is controlled by the user, the data will be instantly sent via a Bluetooth network then the input received by the Hc-05 Bluetooth module that connected to Arduino microcontroller. Arduino microcontroller circuit serves as a data processor that controls the solenoid that previously connected to a relay that functions as an on / off switch. Microcontroller arduino has been equipped with an internal EEPROM, Flash memory etc. This section will examine the input password, and give orders to the LED and relay, to fill out his program with the principle of ISP (In System Programming) so that the program can be done without removing control. Power supply circuit is used to supply power throughout the system. The power needed for the whole system is equal to 12 Volts dc. Capacitors are used as filters. And the last is the type LM7812 regulator IC that functions as a regulator of the power output by 12 Volt.

1) Connect the Arduino, Bluetooth Module and servo as shown in the circuit diagram.

2) Upload the Arduino Sketch code into the, Arduino of course. Make sure to unplug the RX pin first before uploading the code or else you will get an error.

3) Install the apk file on your Android phone. For those of you who are interested in the Android App code, you can see the app's source code in the Android Studio Project file.

4) Open the app and establish a connection with the bluetooth module by pressing the "Connect to Bluetooth Module" button on the app.

5) The bluetooth module's light should stop blinking once connection has been established.

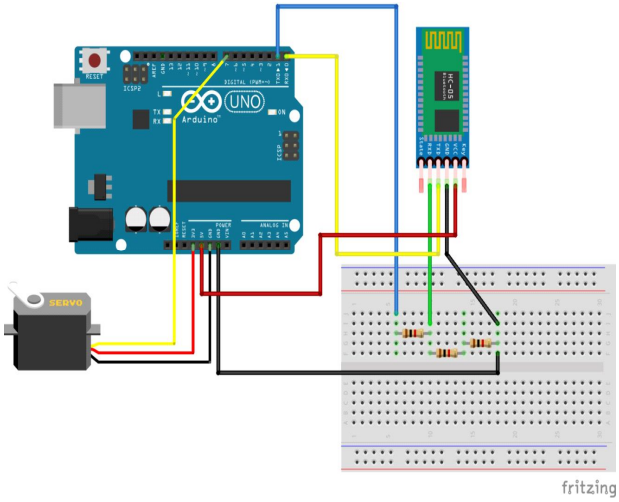

Figure: - Circuit diagram of the whole system

©IJRASET: All Rights Reserved

Volume 5 Issue V, May 2017
ISSN: 2321-9653
International Journal for Research in Applied Science & Engineering Technology (IJRASET)

III. METHODOLOGY

A. Measurement Set-up of Different Location

There are three different types of measurements - (i) Indoor, (ii) Outdoor with non-obstacle area, (iii) Indoor with obstacle area. It is found that, for indoor (obstacle and non-obstacle area), the maximum distance that the receiver can detect the signal from the Smartphone is around 10 meters in house while for outdoor area, the maximum distance is 20 meters. In this case, it can be said that for non-obstacle area, the system can communicate between input and output at a distance of at least 20 m.

B. Bluetooth Power Strength Measurement

Bluetooth power strength measurement has been done in Electromagnetic Compatibility Center (EMC), UTHM. Based on the data, three different types of analysis can be analyzed in terms of (i) Frequency range, (ii) Power strength for two different distances and Frequency Hoping Spread Spectrum (FHSS).

Frequency range. Theoretically, Bluetooth is a wireless technology standard for exchanging data over short distances from fixed and mobile devices, and building personal area networks (PANs) . From the measurement set-up, it is proved that the frequency range is still in the range of Bluetooth frequency even in a different distance and condition.

Power strength. The reading of the graph are converted from dB (µV/m) to the dBm to calculate the value of transmitted power of Bluetooth using Eq. 1.

$Pr = [(\mu\, Vm)] - 104.7 + (20\log d)$ ..... (1)

Where; Pr is power strength in dB E is level in dB (µV/m) d is distance between Bluetooth module and antenna Basically, the received power from Bluetooth module (Blue Bee) is ≥4dBm which is Class 2 radio.

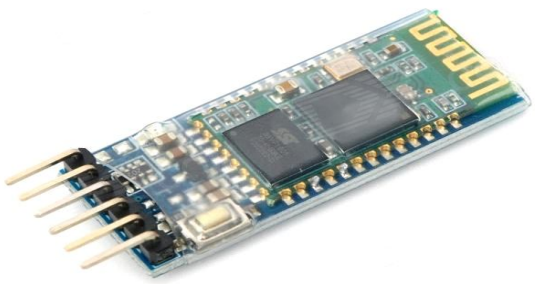

Figure: - Bluetooth Module

FHSS. Its primary responsibility is to receive the data signal input to be transmitted and modulate it with a carrier signal such that the modulated signal hops from one frequency to another at the different time slots and is spread over a wide band of frequencies. Spreads spectrums spread a signal's power over a wider band of frequencies, for example, there is a band width trade-off in order to gain signal-to-noise performance.

This contradicts the normal approach to conserve frequency bandwidth, but the spreading process makes the data signal much less susceptible to electrical noise and other interference than conventional radio modulation technique. Other transmission and electrical noise, typically narrow in bandwidth, will only interference with a small portion of the spread spectrum signal, resulting in a much less interference and less errors when the receiver demodulates the signal.

EM lock for door consists of a magnet bar, a steel plate and mounting accessories. When current flow, they will be bonded together strongly until the current is cut off. The relationship between the magnetic field contribution and its source current element is called the Biot-Savart law as written. According to Biot-Savart's Law, when the signal "Lock" from the Smartphone is transmitted to the Bluetooth module, the current will flow to trigger the relay. In this condition, Magnetic Door Lock will bind together. When the signal "Unlock" is transmitted from the Smartphone, it will trigger back the relay and the relay in a normally open condition, so the Magnetic Door Lock will release because no more the current flow.

©IJRASET: All Rights are Reserved

Volume 5 Issue V, May 2017
ISSN: 2321-9653

IV. RESULT

The results of the test series shows the minimum system of the Arduino microcontroller circuit system has a minimum value 9600 Bits per second, with 8 data bits and 1 Stop Bits. The whole system in this project operates in the power of 12 volts. A function of this IC is to make the input voltage 220 volts of electricity into the main 12 volt DC, so it is safe and does not damage the circuit.

Testing was conducted to determine the changes or differences in voltage. Further testing is to examine the connectivity between Bluetooth on android Smartphone with Bluetooth module series HC-05 and the connection between keypad with Microcontroller. All of these tests show that all goes according to design connections. Final testing is testing the connection System to lock/unlock the door automatically. The test is performed to test the Arduino output in giving output on the LED and Relay for opening and closing the systems.

V. CONCLUSION

The goal of this thesis is to propose a system that can help disabled people to open a door wireless using any android smartphone. The range and security aspects were considered through the use of Bluetooth technology that is embedded in the mobile device. The system was able to actuate a pin to lock or unlock the door from a short distance away by pressing a button on a smartphone. The status of the door has also been created to make the system complete. In future, the LockIt door apps should offer assistance in controlling doors, windows and basic home electronic appliances.

VI. ACKNOWLEDGMENT

We would like to thank our project guide Mr. Sailendra Kumar Singh, Department of Electronics and Telecommunication Engineering for his immense support and enlightened guidance for our project which we have developed as a bachelor of engineering student. We also take this opportunity to express a deep sense of gratitude to Mr. Sandeep R. Somkuwar, Assistant Professor and Head of Department of Electronics and Telecommunication Engineering for his cordial support, valuable information and guidance, which helped us in completing this task through various stages.We are also very grateful for the inspiring discussions with all our faculties especially Mr. Shailendra Kumar Singh, Assistant Professor and project coordinator. Their valuable support and path-guiding suggestions have helped us to develop this project.

REFERENCES

[1] Raj Kamal, "Embedded Systems - Introductions", Publications:McGraw-HillEducation.Wi-Fitechnology, Technology Tracking Department ,2003 http://arduino.cc/en/Guide/HomePage
[2] Servo Motor control and Arduino, Future Electronics Ltd, Egypt.
[3] Potts. J and Sukittanon. S," Exploiting Bluetooth on Android mobile devices for home security application", IEEE Conference on Automation and Appliances, vol.22, pp 94-97, 2012.
[4] Alecsandru.R,Prueshner.W.andEnderle.J.D,"Remote door lock controller [for disabled persons]", IEEE Conference on Bioengineering, vol 22, pp 47-48, 1999.
[5] Lia Kamelia, Alfin Noorhassan S.R, Mada Sanjaya.W.S, and Edi Mulyana, "Door Automation System using Bluetooth-based Android for Mobile phone," vol. 9, no. 10, October 2014.
[6] Shiu Kumar,"Ubiquitous Smart Home System Using Android Application", International Journal of Computer Networks &Communications, vol. 6(1), pp. 33-43, 2014.
[7] Priyare.R, Suva, and Tazil. M,"Bluetooth based home automation system using cell phone", IEEE 15th International Symposium on Consumer Electronics (ISCE), 2011
[8] S. Kanagamalliga, Dr. S. Vasuki, A.Vishnu Priya, and V. Viji," A Zigbee and Embedded based security monitoring and control system", International Journal of Information Sciences and Techniques (IJIST) Vol.4, No.3, May 2014 . http://arduino.cc/en/main/software

©IJRASET: All Rights are Reserved

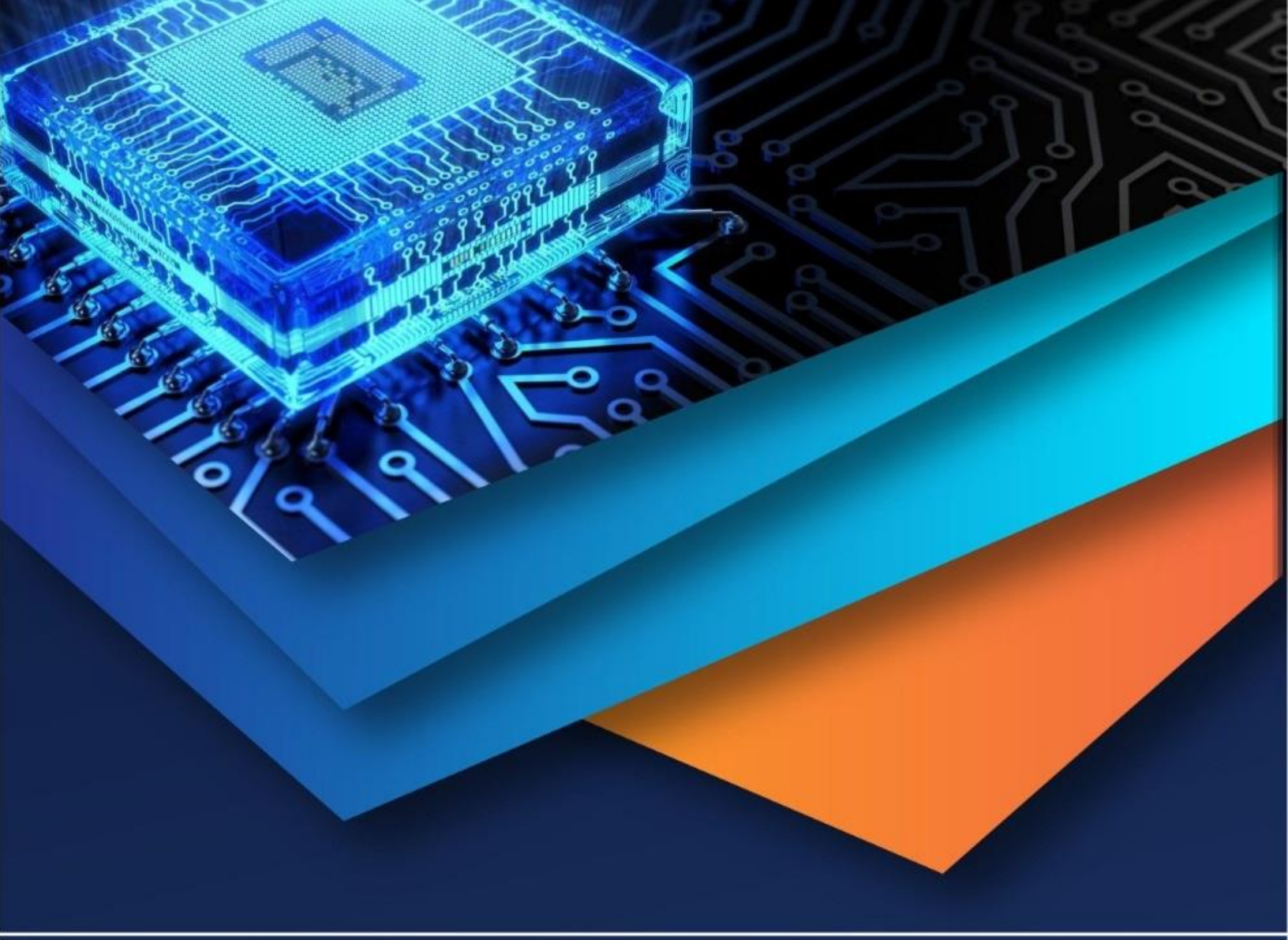

10.22214/IJRASET

45.98

IMPACT FACTOR: 7.129

IMPACT FACTOR: 7.429

INTERNATIONAL JOURNAL FOR RESEARCH

IN APPLIED SCIENCE & ENGINEERING TECHNOLOGY

Call : 08813907089 (24*7 Support on Whatsapp)