iJRASET
International Journal For Research in Applied Science and Engineering Technology

INTERNATIONAL JOURNAL FOR RESEARCH

IN APPLIED SCIENCE & ENGINEERING TECHNOLOGY

Volume: 5 **Issue:** VIII **Month of publication:** August 2017

DOI: http://doi.org/10.22214/ijraset.2017.8032

www.ijraset.com

Call: 08813907089 | E-mail ID: ijraset@gmail.com

International Journal for Research in Applied Science & Engineering Technology (IJRASET)
ISSN: 2321-9653; IC Value: 45.98; SJ Impact Factor:6.887
Volume 5 Issue VIII, August 2017- Available at www.ijraset.com

Home Automation System using Artificial Intelligence

Prof. Garima Tripathi[1], Melnita Dabre[2], Lyzanne Dsouza[3], Tansy Fernandes [4]
[1,2,34] Department of Information Technology Engineering, FRCRCE

Abstract- With the introduction of AI to home automation, the living space of the user can be controlled without the touch of a button either centrally or remotely. The necessary software tools should present a comfortable user interface. In the proposed system it is assumed that the home system adapts itself to the occupants lifestyle. The proposed Intelligent System continuously learns and adapts to the users preferences. By using Natural Language Processing, the Intelligent System will execute the commands issued by the user. The AI system will infer the changes and implement them with the help of the Raspberry Pi. This project aims at controlling, managing and coordinating the day-to-day home appliances in a comfortable, effective and secure way. The design of the system is based on Master-Slave communication between the Raspberry Pi and Arduino to control the appliances. On issuing a command to the system, the Raspberry Pi will map the command to the Arduino device in the specific rooms. In addition, the Intelligent System also performs the work of a Personal Assistant and has additional modules such as News, Shopping etc. to let the user access data remotely.

I. INTRODUCTION

The general goal of the home automation is to use networking technology to integrate the devices, appliances and services found in homes so that the entire domestic living space can be controlled centrally or remotely. "Home automation is a very promising area. Its main benefits range from increased comfort and greater safety and security, to a more rational use of energy and other resources, allowing for significant savings. It also offers powerful means for helping and supporting the special needs of people with disabilities and, in particular, the elderly. This application domain is very important and will steadily increase in the future [1]."

With rapid economic growth, living standard are also rising day by day. The modern society wants safe, economic, comfortable and convenient life which is ideal for every family. By using off the shelf components to reduce the cost and open source software to get around licensing requirements of software, we can develop an economical smart home system without increasing the complexity. In [2], the authors present an Artificially Intelligent Home Automation System Based on Arduino as the Master Controller. The sensors are controlled with the help of Arduino, and the voice command part has been developed on Visual Basic, both of which are FOSS (Free Open Source Software) and the security system GUI is designed with the help of MATLAB 2013. Arduino is an open-source prototyping platform that provides easy-to-use hardware and programming environments. It is relatively inexpensive compared to other microcontroller-based platforms like Beagle Bone. Thus creating an economic and energy efficient system development.

If we talk home automation, the main issue is how to connect home appliances to the Intelligent System. With the help of Raspberry Pi and Arduino, we can build a home automation system that is capable of operating these home devices automatically. The Raspberry Pi will serve as a master device through which the AI will communicate and control the home appliances.

A home automation system provides a large number of services which can broadly be classified into following four categories:

A. Comfortable Management of appliances
B. Remote controlling of appliances
C. Efficient utilization of home resources
D. Enhancing home security

Comfortable management includes automatic adjustment of AC(air conditioning) setting, fan regulation setting etc. Remote controlling services include accessing devices from remote location and setting them ON/OFF. Efficient utilization includes running the home appliances at their optimal setting (setting at which we get the required output at minimum cost). Last category of service includes all those services which are used for securing the home environment.[3]

E. Artificial Intelligence Systems (AI)

AI is the collection of powerful and rigorous programming techniques studying the nature of intelligence by building computer systems, and the application of these concepts in solving real-world problems. The growth in the areas of AI has been increased

©IJRASET (UGC Approved Journal): All Rights are Reserved

significantly from the last decade. There exist a number of AI tools that make an automation system more sophisticated. The AI system proposed in this project is capable controlling home appliances on the instruction of the users.[4]

F. Application of AI in Home Automation:

1) *Use of AI in Comfortable Systems:* In these systems the application of AI is limited as most of the part can be easily implemented using some electronic circuitry. Here the only part where the AI is effective is the knowledge based database which should be learnable (as discussed previously) for system to be truly comfortable. Since AI tools are little bit costly it will increase the cost of the system but will make the system more comfortable, flexible, easy updatable etc.
2) *Use of AI in Remote Controlling Systems:* In these systems AI can be applied in the authorizer as well decision maker stage. Applying AI at the authorizer will increase the responsiveness and security and is more applicable when the environment under consideration is an industry where security is a major concern (e.g. Banks). On the other hand, Decision making part can utilize the case based reasoning of AI for effective and efficient management as it has to decide that which of the target device is corresponding to this particular instruction.
3) *Use of AI in Optimizing the Resource Performance:* In this system AI can used to implement knowledge base as discussed for previous systems and for Analyzer as it makes it more efficient in deciding the particular action. Moreover, if analyzer is learnable from its experience then it will make the system more optimized.
4) *Use of AI in Secure Systems* The biggest use of AI is in these systems. Here we can apply following tools of AI for various applications:

a) Video Processing for security threat analysis
b) Image Processing for security threat analysis
c) Audio processing for security threat analysis
d) Knowledge base system for Security system database
e) Case based reasoning for analyzer and synthesizer
f) Decision Making in Security Checking and Decision making

G. Natural language processing (NLP)

Natural language processing (NLP) is a field of computer science, artificial intelligence, and computational linguistics concerned with the interactions between computers and human (natural) languages and, in particular, concerned with programming computers to fruitfully process large natural language corpora. Challenges in natural language processing frequently involve natural language understanding, natural language generation (frequently from formal, machine-readable logical forms), connecting language and machine perception, managing human-computer dialog systems, or some combination thereof.

II. PROPOSED SYSTEM

Home Automation System is an emerging technology and also a need of today. The main objectives of home automation are controlling, management and coordination of home appliances in a comfortable, effective and secure way either centrally or remotely. On the other hand, Artificial Intelligence is evolving as a technology for developing automatic systems that can perceive the environment, learn from environment, and can make decision using case based reasoning. With the introduction of AI to home automation, the living space of the user can be controlled without the touch of a button.

Assistance system for older people and those losing independence is a social issue residing at the heart of a society in which the ratio between older and younger people is on the increase. Due to the growth in the number of elderly people, it is predicted that in 2050 there will be no more than 1.4 people in the workforce for every one person outside of the workforce. Thus the system proposed is to cater for people in such diverse domains as home automation and health. The aim is to conceive a system that understand their environment and, without being invasive, are capable of self-adaptation.

With the rising cost of energy and the ever-increasing demand, the need for energy management system has risen to keep bills down. Energy saving potential has also been identified. The energy consumption can be reduced significantly by optimizing the environment when the system is aware of the users presence and preferences.

We have smart cars, smart phones and even smart T.V's. It's time to bring smart homes to the future.

A. Need

1) Better comfort and stress-free control over the home appliances.

©IJRASET (UGC Approved Journal): All Rights are Reserved

2) The system will prove beneficial for older users and also provide them with the optimum environment in their home space.
3) Effective tool for bedridden patients as well as the sick to control the surrounding atmosphere with speech.
4) With the depletion of energy and increase in the energy consumption, efficient and energy saving smart homes are the need of the hour.

B. *Objective*

1) To create a comfortable and hands-free environment in homes.
2) To adapt the proposed AI to the occupants lifestyle.
3) To analyze the methods of home automation.
4) To allow remote communication with home appliances.
5) Save energy.

C. *Project Description*

The aim of the project is to create a convenient and user friendly environment for the home occupants. It also aims to intelligently coordinate all appliances communicating together, thereby ensuring greater comfort. One suitable programming method for home automation systems is the definition of linguistic rules that can be processed by a fuzzy system.In our approach, using Natural Language Processing(NLP) the home system adapts itself to the occupants lifestyle and carries out the user's tasks.

1) *Configuring the House:* The task involves analyzing the schematics of various rooms and understanding the appliances etc., used in the house. Each room have multiple controllable devices (i.e. Light(s), Fan, Wall Socket(s), etc.), one Passive IR (to detect human presence in the room), one temperature sensor (LM35 to collect room temperature) and LDR (to detect light intensity near room window).Another important task involves, device address mapping and I2C communication between the multiple controllable devices.

2) *Room Configuration:* Now considering room scenario, an Arduino Due will control devices and read sensor data. Periodically, Raspberry Pi requests for the sensor data collected by Arduino Due. The figure below depicts how the Arduino Due will connect with the devices and sensors. Each room has multiple controllable devices(i.e. Light(s), Fan, Wall Socket(s), etc.) which will be controlled with the help of the Relay Module.

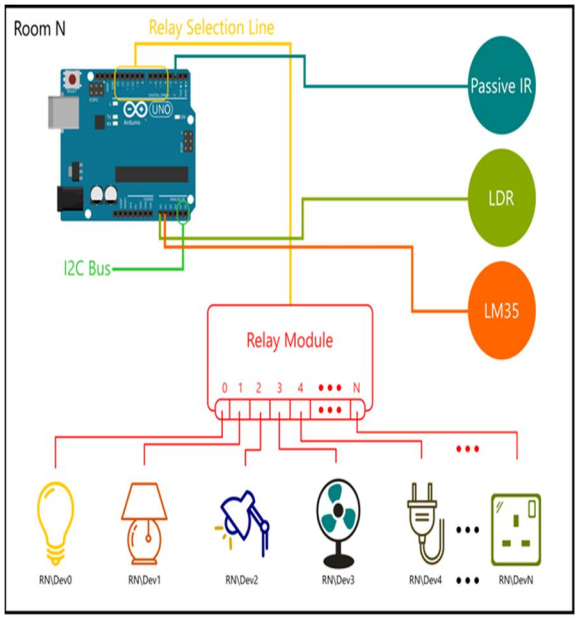

Figure 2.1 Room Configuration

3) *Overall Hardware Configuration:* A Raspberry Pi 3 will serve as a master device. For each room we want to automate, an Arduino Due is needed. The Arduino Due will act as a secondary controller, which takes command from the Raspberry Pi 3 and operates a specific device. Here, the Raspberry Pi 3 and all the Arduino Dues are connected together on a I2C bus. All Arduino Dues act as slaves. Each Arduino Due has unique I2C slave address on the bus.[5]

©IJRASET (UGC Approved Journal): All Rights are Reserved

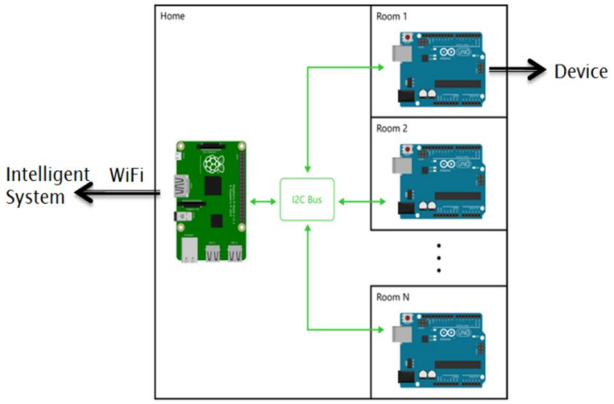

Figure 2.1.1. - Overall Hardware Configuration

4) *Natural Language Processing:* One suitable programming method for home automation systems is the definition of linguistic rules that can be processed by a system using Natural Language Processing. In our approach it is assumed that the home system adapts itself to the occupants lifestyle and executes the desired instructions. Based on this idea, we present an appropriate Intelligent System.

Thus the objectives are

a) Configuring the house.
b) Device address mapping.
c) Communication between multiple controllable devices.
d) Building the appropriate neuro fuzzy controller.

D. Project Modules

1) *Raspberry Pi - Arduino Communication:* With Raspberry Pi and I2C communication, we can connect the Pi with single or multiple Arduino boards. The Raspberry Pi has only 8 GPIOs, so it would be really useful to have additional Inputs and outputs by combining the Raspberry Pi and Arduino.

There are many ways of Linking them such as using USB cable and Serial Connection. Why do we choose to use I2C? One reason could be it does not use your serial, USB on the Pi. Given the fact that there are only 4 USB ports, this is definitely a big advantage. Secondly, flexibility. You can easily connect up to 128 slaves with the Pi.

The Raspberry Pi is running at 3.3 Volts while the Arduino is running at 5 Volts.

The reason it works is because the Arduino does not have any pull-ups resistors installed, but the P1 header on the Raspberry Pi has 1k8 ohms resistors to the 3.3 volts power rail. Data is transmitted by pulling the lines to 0v, for a "high" logic signal. For "low" logic signal, it's pulled up to the supply rail voltage level. Because there is no pull-up resistors in the Arduino and because 3.3 volts is within the "low" logic level range for the Arduino everything works as it should.

Figure 2.2.1 - RaspberryPi - Arduino Communication

2) *Relay-Switch Module:* What is a relay? We know that most of the high end industrial application devices have relays for

©IJRASET (UGC Approved Journal): All Rights are Reserved

their effective working. Relays are simple switches which are operated both electrically and mechanically. Relays consist of a n electromagnet and also a set of contacts. The switching mechanism is carried out with the help of the electromagnet. There are also other operating principles for its working. But they differ according to their applications. Most of the devices have the application of relays.Why is a relay used? The main operation of a relay comes in places where only a low-power signal can be used to control a circuit. It is also used in places where only one signal can be used to control a lot of circuits. The application of relays started during the invention of telephones. They played an important role in switching calls in telephone exchanges. They were also used in long distance telegraphy. They were used to switch the signal coming from one source to another destination. After the invention of computers they were also used to perform Boolean and other logical operations. The high end applications of relays require high power to be driven by electric motors and so on. Such relays are called contactors.

3) *Jasper Module* Jasper is an open source platform for developing always-on, voice-controlled applications. Jasper makes it really easy to install personal assistant on Raspberry Pi and use it for custom voice commands, information retrieval and so on. Jasper is written in Python and can be extended through the API. More importantly, Jasper uses CMUSphinx for offline speech recognition, so much waited capability for assistant developers. [6]

III. IMPLEMENTATION

A. *Hardware Implementation*

1) *Relay and Switch Control;* The electromagnetic switch on the relay board is used to control the light dimmer circuit which in turn controls the light intensity of the electric bulb. The code is used to turn on, turn off or dim the lights by toggling the relay pins between HIGH and LOW. The LightOn.py, LightOff.py and DimLight.py codes serially write a character each to the slave controller that executes a command to control the relay board.

B. *Software Implementation*

1) *Jasper Configuration:* Jasper is a framework designed for easy Speech-to-Text (STT) and Text-to-Speech (TTS) configuration. It initializes all the parameters needed such as the TTS engine, STT engine, Mic etc. Jasper needs a configuration file that is called “profile”. In order for Jasper to accurately report the time, send you text messages, and more, you first need to generate a user profile. Using the support documentation for Jasper, an open source platform for developing always-on, voice-controlled applications, the specific modules for the project were developed. [7]

C. Modules configured in jasper

1) Light Module: The Light Module is a custom Jasper module capable of recognizing the trigger words such as "SWITCH", "LIGHT", "ON", "BRIGHTER", "TOO", "DIM", "DARK". It consists of 3 Python files : LightOn.py, LightOff.py and Dim.py. Once the words are recognized, an appropriate serial character is written to a preconfigured serial port running at 9600 bps.

2) News Module: The NEWS module parses the RSS feed from Google News to show the latest news. It makes use of the feed parser method to get the articles.

3) Joke Module: The joke module consists of 'Knock Knock' jokes that are stored locally on the raspberry pi in a text file. On saying the word 'JOKE' or 'KNOCK', Jasper randomly selects a joke from the text file and awaits the response "Who (word said by user)?" from the user to complete the joke.

4) Shopping Module

IV. CONCLUSION

The Home Automation system provides a centralized control over the home appliances with the addition of low cost devices and an intelligent system. The introduction of a Personal Assistant, in this case Jasper, has eliminated the need of an additional device like a smartphone or a Bluetooth device. The hands-free control over the appliances provides help and assistance to the disabled and elderly.

With the growth in the field of Home Automation, the main aim of the project is to bring about an Intelligent System to make day-to-day household decisions. Using Natural Language Processing, the user’s request is executed and acknowledged by the Intelligent System. The AI developed does not only control the appliances but is also used to retrieve information from the Web depending on the query.

REFERENCES

[1] Renato J. C. Nunes, Jose C. M. Delgado, “An Internet Application for Home Automation”, 10th Mediterranian Electrotechnical Conference, MEleCon 2000,

©IJRASET (UGC Approved Journal): All Rights are Reserved

vol 1, USA: IEEE 2000, pp. 298-301.

[2] Rituparna Halder, Susmit Sengupta, Sudipta Ghosh, Debasish Kundu,"Artificially Intelligent Home Automation System Based on Arduino as the Master Controller," The International Journal Of Engineering And Science (IJES), vol. 5, February 2016.

[3] V. S. Gunge and P. S. Yalagi, "Smart home automation: A literature review," International Journal of Computer Application, 2014.

[4] S. Kumar and M. A. Qadeeri, "Application of AI in home automation," IACSIT International Journal of Engineering and Technology, vol. 4, no. 6, December 2012.

[5] P. B. Rao and S. K. Uma, "Raspberry pi home automation with wireless sensors using Smartphone's," International Journal of Computer Science and mobile computing, vol. 4, May 2015.

[6] Saha, Shubhro, Charles Marsh, and Jan Holthuis. "Jasper | Control Everything With Your Voice". Jasperproject.github.io. N.p., 2014. Web

[7] "Jasper Support Forums". Groups.google.com. Web.

©IJRASET (UGC Approved Journal): All Rights are Reserved

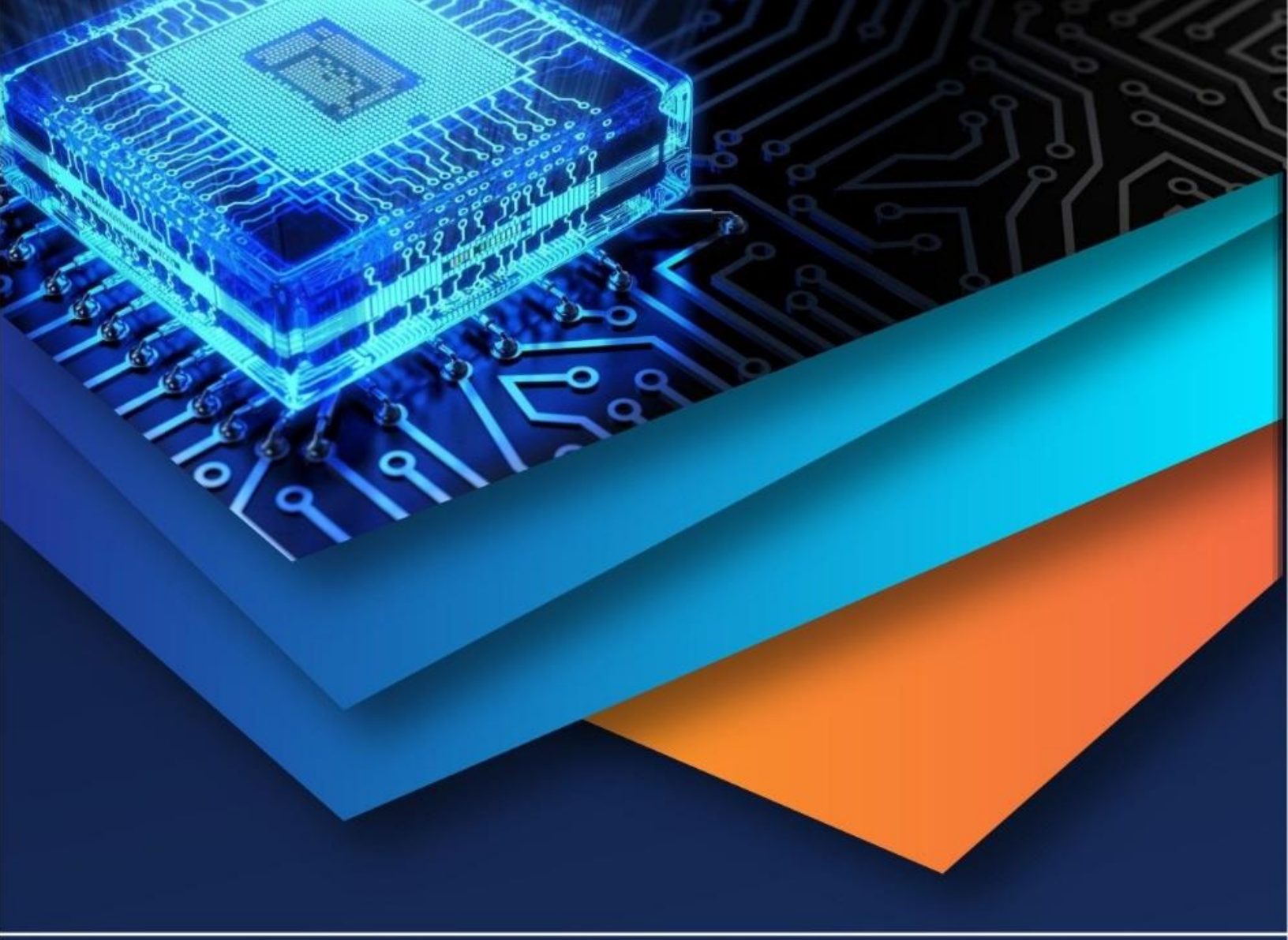

10.22214/IJRASET

45.98

IMPACT FACTOR: 7.129

IMPACT FACTOR: 7.429

INTERNATIONAL JOURNAL FOR RESEARCH

IN APPLIED SCIENCE & ENGINEERING TECHNOLOGY

Call : 08813907089 (24*7 Support on Whatsapp)