iJRASET
International Journal For Research in Applied Science and Engineering Technology



INTERNATIONAL JOURNAL FOR RESEARCH

IN APPLIED SCIENCE & ENGINEERING TECHNOLOGY

Volume: 13 **Issue:** I **Month of publication:** January 2025

DOI: https://doi.org/10.22214/ijraset.2025.64639

www.ijraset.com

Call: 08813907089 | E-mail ID: ijraset@gmail.com

International Journal for Research in Applied Science & Engineering Technology (IJRASET)
ISSN: 2321-9653; IC Value: 45.98; SJ Impact Factor: 7.538
Volume 13 Issue I Jan 2025- Available at www.ijraset.com

Design and Development of Mini-Maize Cob Threshing Machine

A.R. Kinge[1], T. B. Bastewad[2], S. C. Bhangare[3], P. R. Sapkale[4], R. K. Rathod[5], J. K. Khurdal[6], S. M. Nalawade[7]
[1, 6]*Research Scholar Department of Farm Machinery and Power Engineering Dr. A.S.C.A.E.T (MPKV) Rahuri, Maharashtra, India*
[2]*Professor and Principal Investigator Department of FMPE AICRP on FIM Dr. A.S.C.A.E.T (MPKV) Rahuri, Maharashtra, India*
[3, 5]*Assistant Professor Department of FMPE AICRP on FIM Dr. A.S.C.A.E.T (MPKV) Rahuri, Maharashtra, India*
[4]*Principal and Associate Professor, Dept. of FMPE, Dr. Ulhas Patil College of Agricultural Engineering and Technology, Jalgaon. Maharashtra*
[7]*Head of The Division Farm Machinery and Power Engineering Dr. ASCAET MPKV Rahuri*

Abstract: ***Maize is one of the most important cereal crops in the world agricultural economy due to its significance in human and animal diets. The area under maize cultivation and production continuously increases. Traditionally, maize was dehusked-shelled manually, which is very tedious, drudgery, labor-intensive, and time-consuming. The machines available in the market for maize threshing are generally larger (in size) and more costly. But in India, over 75% of farmers belong to the small and marginal category. We developed this compact, economical 'Mini-Maize cob Threshing Machine' for small and marginal farmers to perform dehusking and shelling operations simultaneously. The average grain output obtained by the developed machine was 271 kg per hour with a shelling efficiency of 98.9%, and a 2 HP power source operated the machine.***
Keywords: Maize, dehusking-shelling, labour-intensive, time-consuming, threshing machine, economical, small and marginal farmers

I. INTRODUCTION

Corn, or maize (Zea mays L.), is one of the most significant cereal crops in the global agricultural economy. Because of its significance in the diets of humans as well as animals, maize is referred to as the "King of Fodder" and the "Queen of Cereals." It originates in Mexico. Since the last decade, the area under maize cultivation has been rising to meet the world's rising food demand. Maize ranks first in the world's cereal production, accounting for about 38% of total grain production. The total grain yield of maize is very high because the productivity per unit area of maize is high as compared to other cereals. The United States became the highest maize producer country, sharing about 43% of total world maize production; India's rank is seventh [12] in world maize production, which is about 2.4% of world maize production with 5% area of world maize cultivation [14]. Maharashtra's rank is fourth in India's maize production [12].

India's economy depends primarily on agriculture, which will account for around 20.2% of the country's GDP in 2021. Non-GMO maize is cultivated in India, ranking third in food crop production after rice and wheat. In India, maize has ranked third in food crop production, followed by rice and wheat. Andhra Pradesh is India's highest maize producer state, which is around 20.9 % of India's maize production. Thereafter, Karnataka (16.5%), Rajasthan (9.9%), Maharashtra (9.1%), and Bihar (8.9%). Maize is a diverse crop that can be cultivated in all three seasons, mainly during the kharif season, for various purposes such as fodder, grain, popcorn, sweet corn, and baby corn. Most maize varieties mature in 90 to 95 days, with an average productivity of 2.43 tons per hectare in India [12].

Threshing or shelling is a crucial operation for separating grain from ear heads and preparing it for marketable quality. Before shelling, dehusking is essential to remove the outer cover of the maize cob without damaging it. Manual shelling is labour-intensive, with an output of 9.12 kg per hour [5].

A. Background And Justification Of This Study

The existing machines available for maize threshing are power-operated cylinder-type shellers with pegs on the cylinder and speeds maintained at about 500 to 600 rpm. They are operated by a 5 to 10 HP electric motor, and their output is about 5 to 15 quintals per hour [13]. PAU Ludhiana Department of Farm Machinery and Power Engineering developed maize dehusker cum threshers, which dehusked and shelled maize cobs simultaneously.

©IJRASET: All Rights are Reserved

It is operated by 26.1 KW tractors. The capacity of this sheller is about 15-20 quintals per hour; the shelling efficiency is 100%, and the broken is a maximum of up to 2% [13].

MPUAT Udaipur developed a whole-crop maize thresher, that is tractor-operated. The main objective of this machine is to shell maize and simultaneously convert the stalk into chaff with a significant saving of labour, the threshing efficiency was about 99 percent, the cleaning efficiency was 96.4%, and the capacity of the machine was 710 kg per hour [13].

Many of the farmers of Maharashtra are growing maize crops for livestock fodder in small areas batch-wise, but nowadays farmers separate the cob when it matures, and at the same time the fodder becomes green, so they take the yield of both green fodder as well as feed (grain), as shown in figure 1. These farmers need small machines, but most of the machines that are available in the market are higher in capacity. In India also, more than 75 percent of farmers belong to marginal and small categories that require small machines. From 1950 to 2018-19, the area under maize cultivation increased three times, and during this period, maize production increased from 1.73 million metric tons to 27.8 million metric tons, which was about 16 times increase in production [12].



Figure 1. Cultivation of maize for both fodder and feed (grain)

B. Objectives Of This Study

1) To study the engineering properties of maize cobs and grains.

2) To design and develop mini-maize cob threshing machines for small and marginal farmers.

3) To evaluate the performance of the developed mini-maize cobs threshing machine.

II. LITERATURE REVIEW

Husk and maize grain attained terminal velocities of 1.2 m/s and 15.12 m/s, respectively. An air stream of at least 1.2 m/s and no more than 15.12 m/s was the desired output of the blower [8]. The engineering properties of maize grain, such as equivalent diameter, true density, angle of repose, roundness, geometric mean diameter, sphericity, bulk density, and true density, were studied [3 & 10]. A trapezoidal or rectangular-shaped hopper is generally preferred, and it is made up of an MS sheet having a thickness of not less than 1.6 mm [17]. Concave clearance and peripheral speed of the threshing cylinder for maize threshers are recommended between 20-30 mm and 9-12 m/s, respectively [1]. The energy needed to machine thresh maize crops is about 2-3 tons per kilowatt per hour [11]. The procedure for designing a transmission system was followed according to machine design [2].

III. MATERIALS AND METHODS

The process is briefly described in this section.

A. Engineering Properties of Maize Cobs and Grains:

These properties are useful and necessary in designing various machine components and determining their dimensions, as shown in Figure 2. The maize cobs of a maize variety 'Rajarshi' were acquired from the pulses and cereals improvement project MPKV Rahuri, 413722, Maharashtra.



Figure 2. Determination of length of un-dehusked maize cobs using a vernier calliper

1) Roundness: - It is an assessment of how sharp a solid's corner is.

$$\text{Roundness} = \frac{A_P}{A_C} \quad \text{.... (1)}$$

Where,

Ap = Maximum projected area of grain, mm²

Ac = is the smallest encompassing circle, mm²

2) Arithmetic (D_a) and Geometric Mean Diameter (D_g)**:** - The length, breadth, and thickness of grains were measured using a digital calliper with an accuracy of 0.01mm.

$$D_a = \frac{l + b + t}{3}, mm \quad \text{.... (2)}$$

$$D_g = (lbt)^{1/3}, mm \quad \text{.... (3)}$$

Where,

l = Length, mm

b= Breadth, mm

t = Thickness, mm

3) Sphericity (ϕ): - It is a measure of the grain's surface area to the surface area of a sphere with an identical volume.

$$\psi = \frac{(lbt)^{1/3}}{l} \quad \text{... (4)}$$

4) Bulk density (p_b)**:** - This step includes measuring the grain after it has been evenly poured into a 500 ml container to a height of 150 mm. To calculate the bulk density of grains using following formula [14].

$$p_b = \frac{m}{v}, g/cm^3 \quad \text{... (5)}$$

Where,

m = Mass of the grain sample, gm

v = Volume of jar, cm³

5) True density (p_t): - Add the measured weight of the grain sample into the measuring jar, and measure the change in the toluene level to determine the actual volume of the grains without void space [9]. The following formula has been utilized to determine the grain's true density.

$$p_t = \frac{w}{V}, \quad g.cm^{-3} \quad \text{.... (6)}$$

Where,

w = weight of grain, gm

v = volume of grain without void space, cm³

6) Moisture content (m. c.): Using the oven-drying technique water content of maize grains was determined. The sample was kept in an oven at 105 °C for a whole day; after that period, the moisture content was calculated [3].

$$m.c. = \frac{w_1 - w_2}{w_1}, \quad \text{....(7)}$$

Where,

w_1 = Wet sample weight, gm

w_2 = Dry sample weight, gm

7) Terminal velocity - The air column method was implemented to determine the suspension velocity.

8) Angle of repose (θ) - Angle of repose calculated by the box filled with grains kept on a circular platform and then escapes the box and then measured the height of the heap as shown in Figure 3 [3].

$$\theta = tan^{-1}(h/r) \quad \text{.... (8)}$$

Where,

θ = Angle of repose, degree

h = Height of stack, cm

r = Radius of stack, cm

ISSN: 2321-9653; IC Value: 45.98; SJ Impact Factor: 7.538
Volume 13 Issue I Jan 2025- Available at www.ijraset.com



Figure 3. Determination of angle of repose

B. Design Calculations and Fabrication of Mini-Maize Cobs Threshing Machine

The standard procedure details were presented in this part in the following sections based on the design calculation of the components.

1) Main frame**:** The function of the main frame is to support the assembly. A trapezoidal shape frame was selected from the stability point of view, and their dimensions were height (575mm), front width (415mm), top width at the side (355mm), bottom width at the side (450mm), and it was made up of mild steel angle 40mm × 40mm × 3mm. The main frame assembly is shown in Figure 4.

2) Prime Mower: This machine was designed to operate by a 2 HP electric motor.

Maximum permissible feed rate (q), kg/s

The maximum permissible feed rate was calculated by following the formula [15].

$$Q = \frac{Power\ available\ (kw) \times 1000}{3600 \times Energy\ required (kw\ t/h)} \quad \ldots (9)$$

Where,

Power available = 2 HP = 1.5 Kilowatts

Energy required for threshing maize crops by mechanical means = 2-3 kilowatts tons per hour [11].

$$Q = \frac{1.5 \times 1000}{3600 \times 2} - 0.2083\ kg.s^{-1}$$

or 12.5 kg per minute

or 750 kg per hour

3) Design for Threshing Unit

- Design of cylinder

The axial flow system, commonly used in designs, involves multiple passes through the threshing zone between the cylinder and concave, enhancing retention time for un-dehusked cobs during continuous feeding [14]. The solid-shaped (made by sheet) shelling cylinder was used in the maize sheller [7]. The procedure of development of the raspbar cylinder was followed according to the [4] threshing cylinder shown in Figure 5.

- Number of bars on threshing cylinder

A pair of circular bars of 7 mm diameter at 180º was selected [4]. A circular bar was selected because it causes less damage to grain as compared to a square bar having sharp edges.

- The threshing cylinder's diameter

To attain the desired peripheral speed of the cylinder, which is 9–12 m/s for maize, the threshing cylinder's diameter, including the bar diameter, has been kept at 154 mm [1].

The effective diameter of the threshing cylinder except the bar is;

= designed cylinder diameter, mm – (bar diameter × 2)

= 154 – (7× 2)

= 140 mm

- Length of threshing cylinder

©IJRASET: All Rights are Reserved

$$q = q_a \times l_r \times R_b \quad \text{or} \quad l_r = \frac{q}{q_a \times R_b} \qquad \ldots. (10)$$

Where,

q = feed rate of thresher, kg/s (refer …9)

q_a = allowable feed rate, kg/s/m length of rasp-bar
(Generally, it varies between 0.34 – 0.4 kg/s/m)

l_r = length of rasp bar

R_b = number of rasp bars (2 taken) [4]

$$l_r = \frac{0.2083}{0.34 \times 2} = 0.30\ m = 300\ mm$$

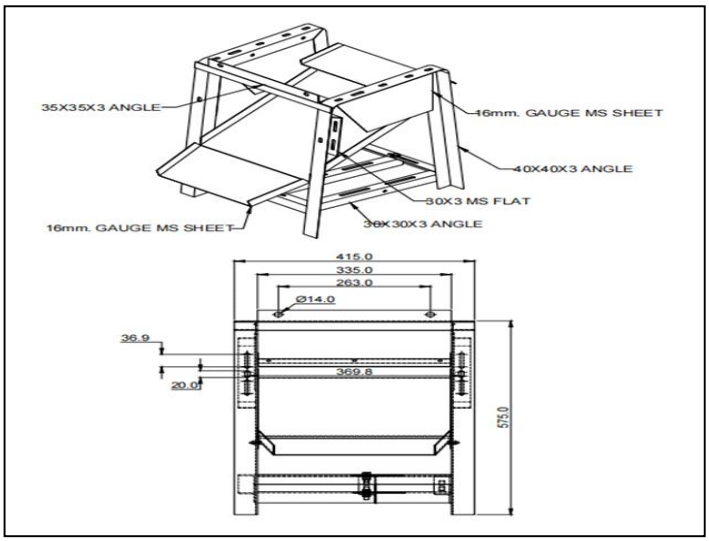

Figure 4. Schematic view of main frame assembly

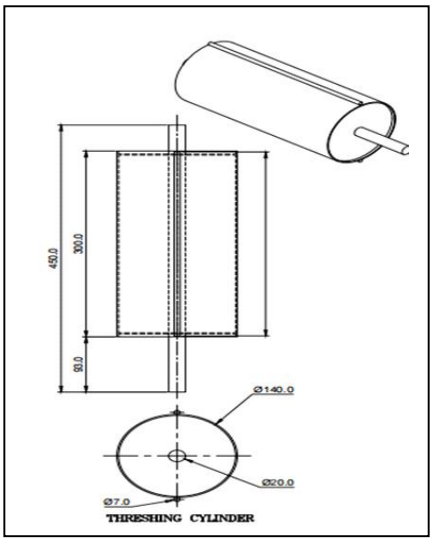

Figure 5 Threshing cylinder

4) Hopper Assembly

This machine was designed to feed through a hopper that has a rectangular shape. The hopper was 390 mm in width, 365 mm in length, 270 mm in height, and had a feed control shutter set 125 mm from the bottom. It was a 1.6 mm thick MS sheet. The hopper does not have any sharp edges [17]. The hopper assembly is shown in Figure 6.

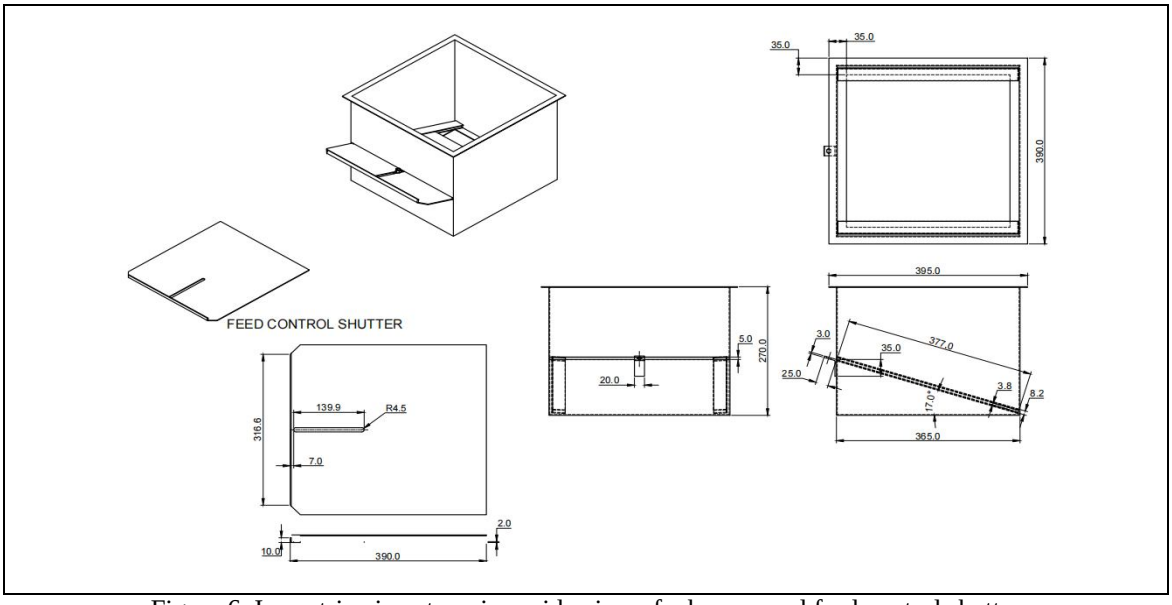

Figure 6. Isometric view, top view, side view of a hopper and feed control shutter

5) Top Cover

For convenient cob feeding to the threshing cylinder, a cover was installed below the hopper. A cylindrical top cover over the threshing cylinder improved the bulk flow of cobs and boosted abrasion. It was formed of a 1.6 mm-thick MS sheet. Since the typical angle of repose for maize cobs was found 36 degrees, a 40-degree slope was designed at the base of the cover to facilitate the cobs' easy feeding into the threshing cylinder. The top cover is shown in Figure 7.

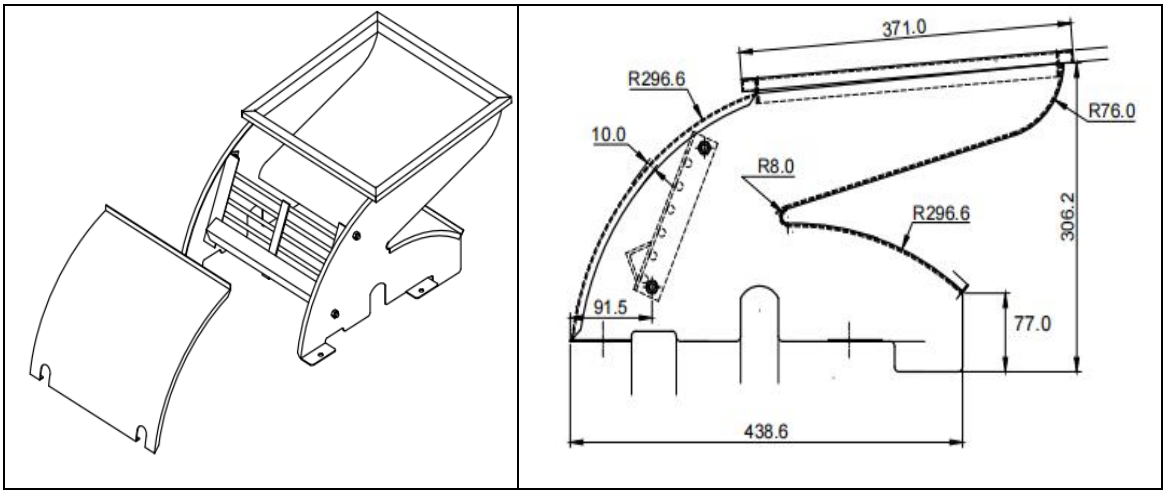

Figure 7. Isometric and side view of Top Cover

6) Concave Assembly

The part at the bottom of the cylinder termed the concave provides space for the dehusking and shelling of maize cobs. To strengthen the frame, it was composed of two MS flats at both top surfaces, circular rods, and three curved (half-circular). In addition to providing adequate rubbing on the cobs, the round rod aided in separating the husk and grain from the cob. For maize thresher, concave clearance was recommended between 20-30 mm [1]. There was considerable variation found in the size of maize cobs, so a spring was provided in this machine concave that spring adjusted concave clearance according to the maize cobs shown in Figure 8.

7) Outlets

There were two outlets in this machine one was a grain outlet and the other was a chaff outlet. The angle of repose of maize grain was found between 30 to 40º [3] so the grain outlet was mounted at 45º from the ground surface. The width of the outlet was 330 mm and it was made up of an MS sheet with a thickness of not less than 1.6 mm so a 1.6 mm thickness was selected [17] Grain outlet is shown in Figure 9.

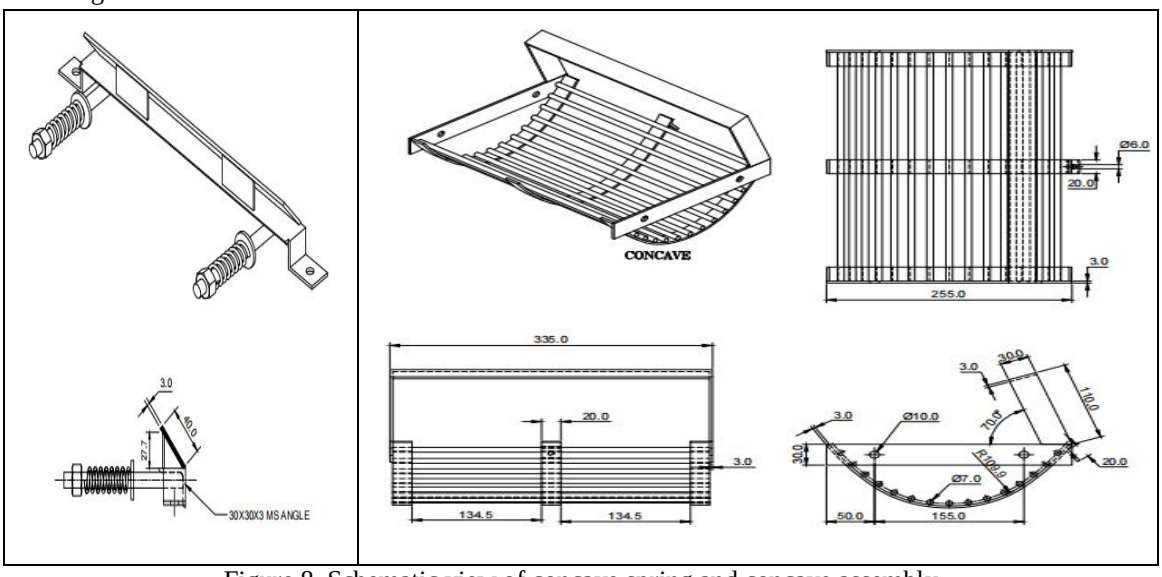

Figure 8. Schematic view of concave spring and concave assembly

ISSN: 2321-9653; IC Value: 45.98; SJ Impact Factor: 7.538
Volume 13 Issue I Jan 2025- Available at www.ijraset.com

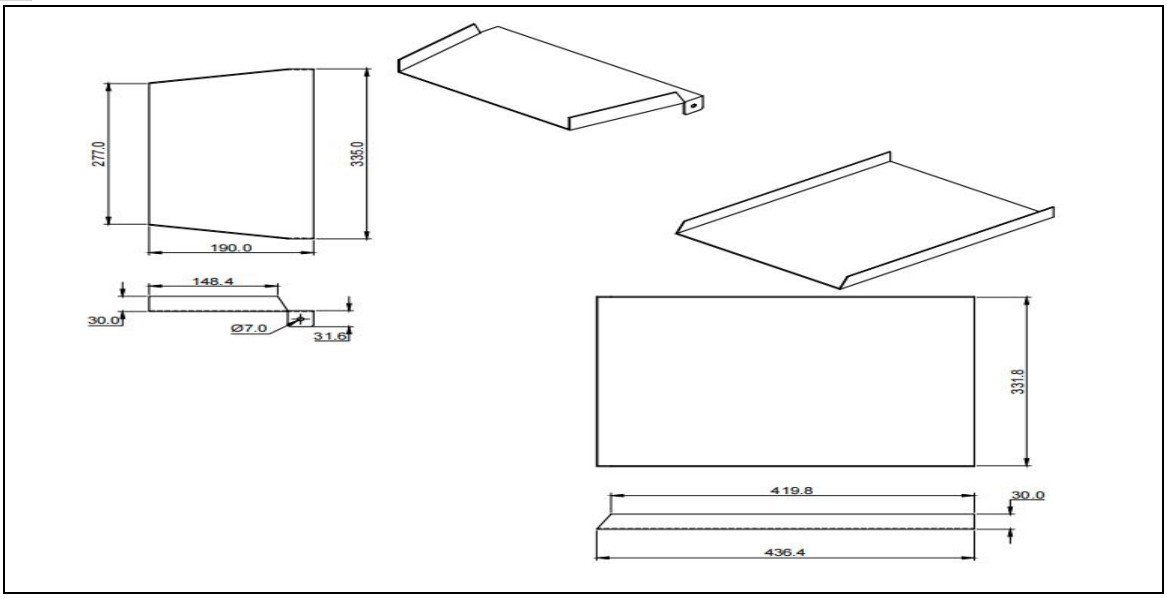

Figure 9. Isometric view, top view of grain outlet

8) Power Transmission System

The peripheral speed of the cylinder affects threshing efficiency, the capacity of the thresher, and grain damage, so some standards were established for every crop for precise operation, such as the peripheral speed of the drum, rpm of the drum, concave clearance, etc. For maize, the peripheral speed of the drum was recommended at 9–12 m/s [1]. Using the following formula, the cylinder shaft's speed was determined; here the tangential velocity was taken as 11 m/s. The power transmission system is shown in Figure 11.

$$\text{Cylinder peripheral speed (m/s)} = \frac{\pi \times D_2 \times N_2}{60} \quad \text{…. (11)}$$

Where,

D_2 = Diameter of cylinder, (0.154 m)

N_2 = speed of cylinder shaft, rpm

$$11 = \frac{\pi \times 0.154 \times N_2}{60}$$

$$N_2 - 1366\ rpm$$

Using this formula, the diameter of the gear (D_2) on the cylinder axis was calculated:

$$\frac{D_2}{D_1} = \frac{N_1}{N_2} \quad \text{…. (12)}$$

Where,

D_2 = Diameter of a pulley on cylinder shaft, mm

D_1 = Diameter of a pulley on motor shaft given by manufacturer), (55 mm)

N_2 = Speed of cylinder shaft, (1366 rpm)

N_1 = Speed of motor (given by manufacturer), (2800 rpm)

$$\frac{D_2}{55} - \frac{2800}{1366}$$

$$D_2 = \frac{2800}{1366} \times 55 = 112\ mm$$

The diameter of the gear (D_3) on the blower axis was taken as 65 mm and the blower was powered by the cylinder shaft pulley (D_2), so the rpm of the blower shaft (N_3) was calculated by

$$\frac{D_2}{D_2} - \frac{N_3}{N_2} \quad \text{…. (13)}$$

Where,

D_2 = Diameter of a pulley on cylinder shaft, mm

D_3 = Diameter of a pulley on blower shaft given by manufacturer), (65 mm)

N_2 = Speed of cylinder shaft, (1366 rpm)

©IJRASET: All Rights are Reserved

N_3 = Speed of blower shaft, (rpm)

$$\frac{112}{65} = \frac{N_3}{1366}$$

$$N_3 = \frac{112 \times 1366}{65} = 2353\ rpm$$

9) Blower

Blowers on the threshers usually consisted of the straight blade type [6]. The amount of air necessary to be discharged through a blower was estimated based on the velocity of the air (V), cleaning thickness (D), and required breadth (W). The flow rate (Q_A) thus gets determined as. The blower assembly is shown in Figure 10.

$$Q_A = V \times D \times W \quad \text{…. (14)}$$

The study found that the grains' and husks' terminal velocities were, respectively, 1.2 and 15.12 m/s. The blower was designed to create a flow of air that could not be lower than 1.2 m/s nor greater than 15.12 m/s. At the straw outlet, the air velocity was found to be 1.77 m/s, which is the required speed for cereals [8].

Therefore, the actual flow rate was calculated by the equation

$$Q_A = 1.77 \times 0.05 \times 0.33 = 0.0292\ m^3 s^{-1}$$

Considering the blower is projected to operate with a 30% efficiency, theoretical outflow (Q_T) can be computed as

$$Q_T = \frac{Q_A}{0.3} = \frac{0.0292}{0.3} = 0.0973\ m^3 s^{-1} \quad \text{…. (15)}$$

The blower's theoretical outflow can also be derived as

$$Q_T = \pi \times d_1 \times b_1 \times v_1 \text{..... (a)}$$

$$Q_T = \pi \times d_2 \times b_2 \times v_2 \text{..... (b)}$$

where v_1 and v_2 are the circumferential components of relative velocities and b_1 and b_2 are the blade widths at diameters d_1 and d_2 of the impeller. For the design, v_2 can be generally calculated as 20% of the impeller tip's peripheral velocity. So,

$$v_2 = \frac{0.2 \times \pi \times d_2 \times N_3}{60}$$

Put the value of v_2 in eqn. (b)

$$Q_T = \pi \times d_2 \times b_2 \times \frac{0.2 \times \pi \times d_2 \times N_3}{60}$$

$$\frac{Q_T}{\pi \times d_2 \times b_2} = \frac{0.2 \times \pi \times d_2 \times N_3}{60}$$

$$(d_2)^2 = \frac{Q_T \times 60}{0.2 \times (\pi)^2 \times b_2 \times N_3}$$

$$(d_2)^2 = \frac{0.0973 \times 60}{0.2 \times (3.14)^2 \times 0.25 \times 2353}$$

$$(d_2)^2 = \frac{5.841}{1158}$$

$$d_2 = 0.0745\ m = 75\ mm$$

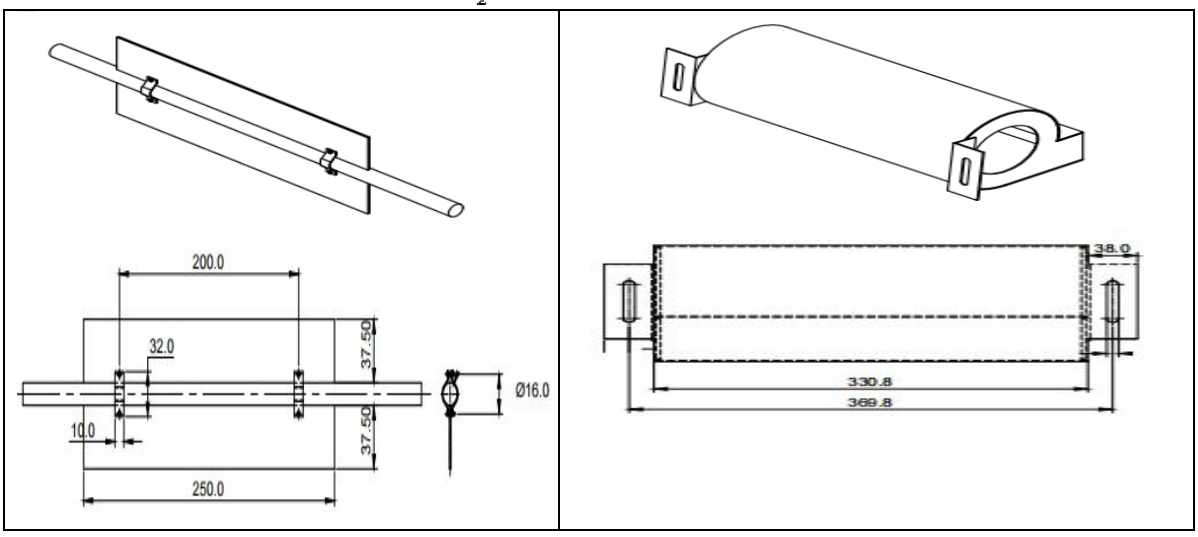

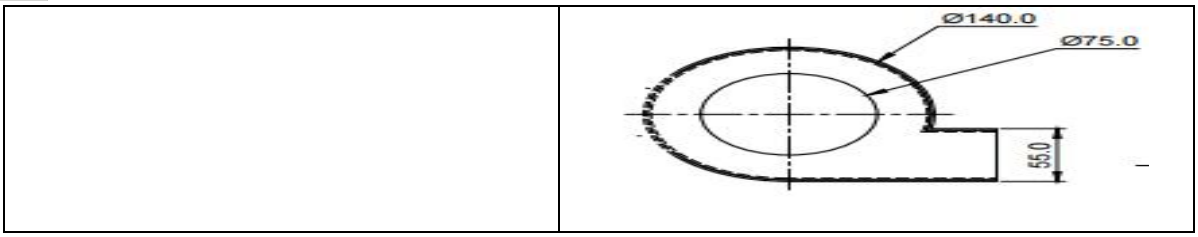

Figure 10. Isometric view, front view, side view of blower and blower fan

10) V- Belt design

Power gets quickly transferred from one shaft to another with the use of a belt. The belt has two sides: a slack side and a tight side. The power transmission system is shown in Figure 11.

The density, sectional area, and permitted tensile load (σ) for a V-belt section are calculated as follows: 1000 kg/m^3, 104 mm², and 2.5 MPa [2]. The rate of friction (μ) between the pulley and belt was calculated using a groove angle (2β) of 35° and a pulley of 0.25 [2].

- The belt's mass in kilograms per unit length (m)

  m = Section area (m^2) × Length (m) × Density (kg/m^3)

$$m = 130 \times 10^{-6} \times 1 \times 1000 = 0.130\ kg\ m^{-1} \quad \text{…. (16)}$$

- The centrifugal tension of the belt (T_C), is in N

$$T_C = m \times V^2 \quad \text{…. (17)}$$

$$T_c = 0.130 \times 9.81 \times (8)^2 = 81.6, N$$

Where,

m is the mass of the belt, N

Belt velocity (V), expressed in m/s, is.

$$\left(v = \frac{\pi D_2 N_2}{60} = \frac{3.14 \times 0.112 \times 1366}{60} = 8\ m\ s^{-1}\right) \quad \text{…. (18)}$$

- Maximum tension in belt (T),

  T = allowable tensile stress (σ) × sector area of belt (A) ….(19)

$$T - 2.5 \times 10^6 \times 130 \times 10^{-6} - 325\ N$$

Where,

σ is in N/mm^2 which is equal to 2.5MPa [2]

A is in mm^2

Therefore,

- Stress on the tight side of belts (T_1) which is in N

$$T_1 = T\text{-}T_C \quad \text{..... (20)}$$

$$T_1 = 325 - 81.6 = 243.4\ N$$

Where,

T is the highest stress in the belt (N/mm^2)

T_C means centrifugal stress in belt (N)

- To find stress at the slack side (T_2) for the open belt drive, the following formula was used

$$2.303 \log (T_1/T_2) = \mu \times \theta \times \text{Cosec}\ (\beta/2) \quad \text{…. (21)}$$

$$2.303 \log \frac{T_1}{T_2} - 0.25 \times 3 \times \text{cosec}\frac{35}{2}$$

$$\log \frac{T_1}{T_2} = \frac{0.25 \times 3 \times 3.32}{2.303}, \quad \frac{T_1}{T_2} = \log(1.07) = 0.0344$$

$$T_2 = T_1 \times 0.0344 = 243.4 \times 0.0344 = 8.37\ N$$

Where,

T_1 refers to the belt's tight side stress (N)

T_2 refers to the stress on the belt's loose side (N).
μ refers to the rate of friction on the belt and pulley as 0.25, [2]
β refers to the pulley's groove angle 17.5º (2β =35º) [2]
θ refers to smaller pulley's (pulley on the motor shaft) angle of contact (rad)

$$\theta = 180 - 2\alpha = 180 - 2 \times 3.89 = 172.2 \times \frac{\pi}{180} = 3.0\ rad \quad \text{…. (22)}$$

Where,
α is the belting angle, degree

$$\sin\alpha = \frac{r_1 - r_2}{x} \quad \text{or} \quad \alpha = \sin^{-1}\frac{(r_1 - r_2)}{x} = \alpha = \sin^{-1}\frac{(56-27.5)}{420} = 3.89^{o} \quad \text{…. (23)}$$

r_1 is the radius of a pulley on the cylinder shaft, (56 mm)
r_2 is the radius of a pulley on a motor, (27.5 mm)
x is the span between two pulleys from centre to centre, (420 mm)

- The power transfer (w) was obtained using

$$w = (T_1 - T_2)\ V \quad \text{…. (24)}$$

$$w = (243.4 - 8.37)8 = 1880.2w = 1.88\ kw$$

- Number of V-belts required calculated by

$$= \frac{maximum\ power\ reqire\ to\ transmitted}{power\ transmitted\ per\ belt} = \frac{1.5}{1.88} = 0.797 = Say\ 1 \quad \text{…. (25)}$$

- Length of a belt of open belt drive, (mm) from the motor to the cylinder shaft was calculated by [2].

$$L = \pi(r_1 + r_2) + 2x + \frac{(r_1 - r_2)^2}{x} \quad \text{…. (26)}$$

$$L = 3.14(56 + 27.5) + 2 \times 420 + \frac{(56-27.5)^2}{420} = 1103.9\ mm$$

Where,
L represents the belt's overall length, mm
r_1 represents the radius of a pulley on the cylinder axis, mm
r_2 represents the radius of a motor axis, mm
x is centre to centre span between pulleys, mm

- Length of a belt of open belt drive, (mm) from cylinder shaft to blower shaft was calculated by [2]

$$L = \pi(r_1 + r_2) + 2x + \frac{(r_1 - r_2)^2}{x}$$

$$L = 3.14(56 + 32.5) + 2 \times 246 + \frac{(56-32.5)^2}{246} = 772.13\ mm$$

Where,
L represents the overall belt's length, mm
r_1 represents the radius of a pulley cylinder axis, mm
r_2 represents the radius of a pulley blower axis, mm
x is centre to centre span between pulleys, mm

11) Design of Shaft

The threshing cylinder was mounted on a shaft and the shaft was supported by bearings on both ends. The shaft was taking power from a motor shaft with the help v-belt drive. The torque or twisting movement was calculated by 'T', [2].

$$T = \frac{p \times 60}{2 \times \pi \times N} \quad \text{or} \quad P = \frac{2 \times \pi \times N \times T}{60} \quad \text{…. (27)}$$

Where,
T is twisting movement (torque) N-m,
P is power transferred by a shaft, w
N is the rpm of the threshing shaft

$$T = \frac{1500 \times 60}{2 \times 3.14 \times 1366} = 10.49\ N-m \quad \text{or} \quad 10490\ N-mm$$

- Shaft subjected to twisting movement (torque) only [2].

$$\frac{T}{J} = \frac{\tau}{r}$$

Where,
T = a torque exerted on the axis, N-m

J = The shaft's axial moment of inertia

$$J = \frac{\pi}{32} \times d^4$$

τ = Torsional stress (42 Mpa for mild steel) [2], and
r = Distance from the central axis to the outermost point
r = d / 2 (where d is shaft diameter).
Substituting value in the above equation can be written as;

$$\frac{T}{\frac{\pi}{32}\times d^4} = \frac{\tau}{\frac{d}{2}} \quad \text{or} \quad T = \frac{\pi}{16} \times \tau \times d^3 \quad \text{or} \quad d^3 = \frac{16T}{\pi\tau}$$

$$d^3 = \frac{16 \times 10490}{3.14 \times 42} \qquad d = 10.8\ mm$$

So, a 10.8 mm diameter shaft is safe, but by considering the safety factor and availability of the shaft 20 mm shaft was selected.

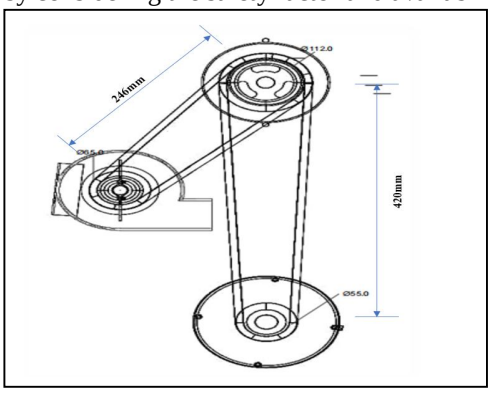

Figure 11. Power transmission system

The machine was built at the All India Coordinated Research Project on Farm Implements and Machinery at Dr. Annasaheb Shinde College of Agricultural Engineering and Technology, MPKV Rahuri. Table 1. shows the materials required for manufacturing and their costs.

TABLE I MATERIAL REQUIRED FOR MANUFACTURING AND THEIR COST

Sr no	Item details	Size specification	Unit price (Rs)	Quantity	Amount (Rs)
1	Ms. angle	40 mm×40 mm×3 mm (5.5 m)	750	2	1500
		30 mm×30 mm×3 mm (5.5 m)	550	2	1100
2	Ms. sheet	1250 mm×2500 mm× 2 m	760	3	2280
3	Ms. Rod (circular)	10 mm	80 Rs/kg	10	800
4	Shaft	20 mm	400	2	800
5	Pulley	180 mm	245	2	490
		60 mm	120	1	120
6	V-belt	130 mm	250	2	500
7	Bearing		225	4	900
8	Nut, bolts and washer		120 Rs/kg	1	120
9	Cutting wheel	102 mm	35	10	350
10	Grinding wheel	102 mm	25	8	200
11	Electric motor	2 HP	10000	1	10000
12	Paint & Painter				1000
13	Welding rods	4 mm	20	30	600
14	Labour charges		400/day	15	6000
15	Cost of electricity (assume 10% of labour charges)				600
	Total Manufacturing cost of the machine (Rs)				27360

The cost required for manufacturing this machine was 27360 Rs.; this cost will be less in mass production than this single unit. The AutoCAD diagram and actual developed machine image are presented in Figures. 12.a and 12.b, respectively.

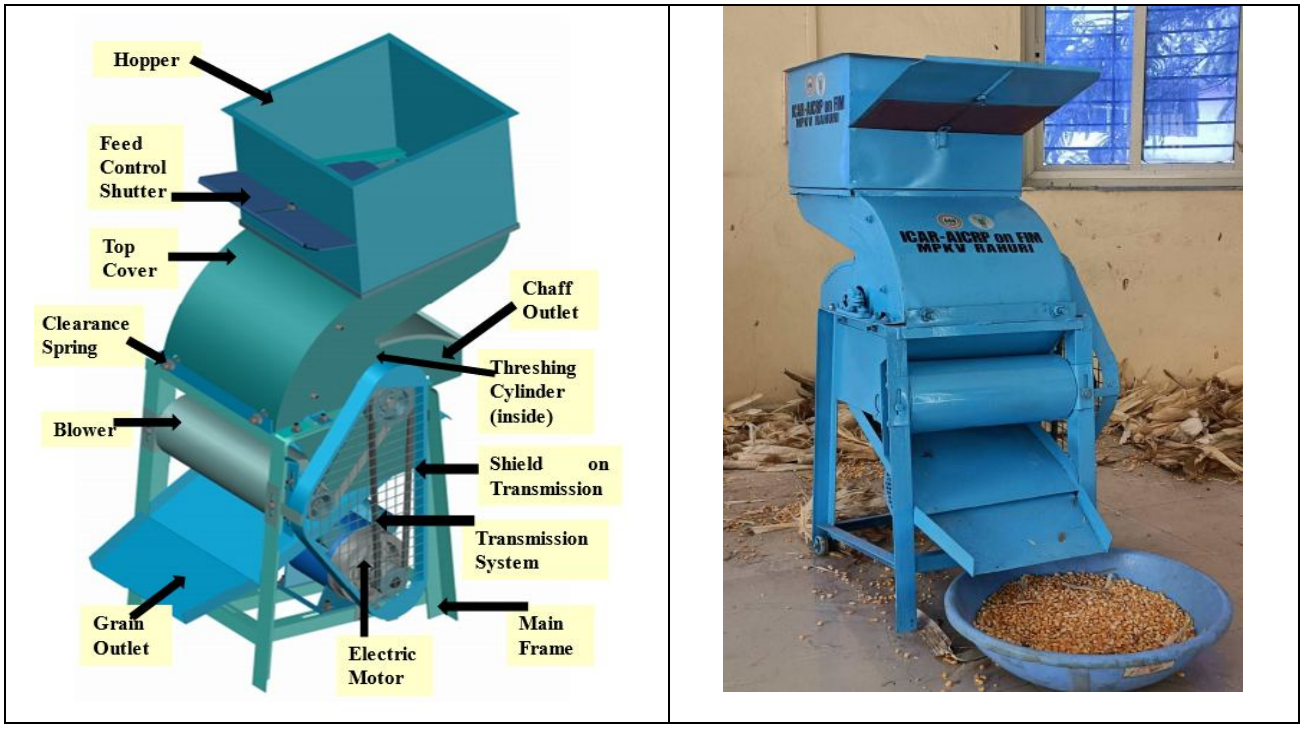

Figure 12a. Diagram of Mini Maize cob Threshing Machine made in AutoCAD. Figure 12b. Actual image of developed Mini Maize cob Threshing Machine

C. Performance Evaluation of Developed Mini Maize Cob Threshing Machine

The designed Mini Maize Cob Threshing Machine's assessment of performance was done at AICRP on FIM MPKV Rahuri on maize variety Rajarshi according to procedure and guidelines prescribed by the BIS codes [18] and [19] for cereals.

Working principles of developed Mini Maize cob Threshing Machine - This maize cob threshing machine works on principles of impact and rubbing action. First, the cobs were fed to the hopper. The hopper supplied cobs to the threshing cylinder, while the feed rate was controlled by the shutter. Then the threshing cylinder performed dehusking and shelling, and here grains and husk were separated. The separated grain and husk came into contact with the blower air stream, and then the husk was removed from the grain. Clean grains were available at the grain outlet. A 2 HP motor provided power to the entire system. Figures 13 and 14, describe the flow diagram of operation and testing.

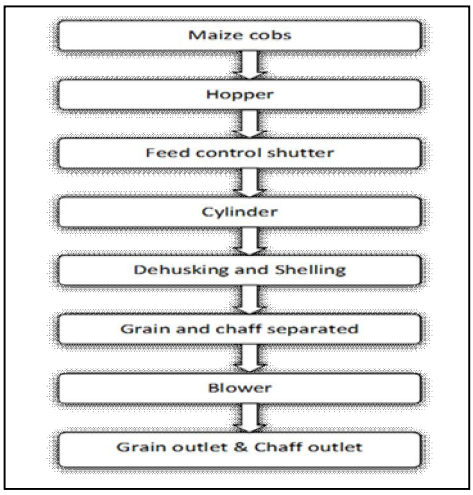

Figure 13. Flow diagram of the working process



Figure 14 Testing of machine

IV. RESULTS AND DISCUSSION

A. Engineering Properties of Maize Cobs and Grains - assessment of maize's different engineering properties at m. c. 15–16% (wet basis).

TABLE II PHYSICAL PROPERTIES OF MAIZE COBS

Sr.no.	Particulars	Rajarshi (Variety of maize)					
		R_1	R_2	R_3	R_4	R_5	Mean value
1	Length of un-dehusked cobs, mm	205.4	197.2	180	173	190	189.12
2	Diameter of un-dehusked cobs, mm	54	51	55	57	49	53.2
3	Number of grain rows in cobs	15	13	14	14	15	14.2
4	Number of grains per row	42	38	39	43	40	40.4
5	Length of shelled cobs, mm	162.4	144	157.3	164	157	156.9
6	Diameter of shelled cobs, mm	26.3	29.7	23.5	22.4	25	25.3
7	Moisture content of maize cobs, (percent)	15.9	15.7	15.8	16	15.3	15.7

R_1, R_2, R_3…. were number of replications.

The average length (un-dehusked), diameter (un-dehusked), length (dehusked), diameter (dehusked), number of grain rows, number of grains per row, angle of repose, and moisture content were found to be 189.12 mm, 53.2 mm, 156.9 mm, 25.3 mm, 14.2, 40.4, 36º, and 15.7%, respectively.

TABLE III ENGINEERING PROPERTIES OF MAIZE GRAIN

Sr. No.	Particulars	Rajarshi (Variety of maize)					
		R_1	R_2	R_3	R_4	R_5	Mean value
1	Length, mm	10.4	10.6	11.1	9.4	10.2	10.34
2	Breadth, mm	7.6	8	7.8	8.2	7.9	7.9
3	Thickness, mm	4.9	5.3	5.2	5.7	5.1	5.24
4	Roundness	0. 285	0.30	0.29	0.28	0.31	0.29
5	Arithmetic mean diameter (D_a), mm	7.63	7.96	8.03	7.76	7.73	7.8
6	Geometric mean diameter (D_g), mm	7.28	7.65	7.66	7.62	7.43	7.5
7	Sphericity (ϕ)	0.7	0.721	0.69	0.81	0.72	0.72
8	Bulk density (p_b), gm/cm^3	0.743	0.745	0.744	0.747	0.742	0.74
9	True density (p_t), gm/cm^3	1.07	1.09	1.08	1.09	1.08	1.08
10	Moisture content (m. c.) percent	15.4	15.2	15.5	15.8	15.6	15.5
11	Terminal velocity (grain), m/s	15.12	15.13	15.15	15.9	15.11	15.28
12	Terminal velocity (husk), m/s	1.22	1.21	1.23	1.24	1.20	1.22
13	Angle of repose (degrees)	29.8	31	30.2	30.4	31.3	30.54

The average length, breadth, thickness, roundness, arithmetic mean diameter, geometric mean diameter, sphericity, angle of repose, bulk density, true density terminal velocity of grain and husk were found to be 10.34 mm, 7.9 mm, 5.24 mm, 0.29, 7.8 mm, 7.5 mm, 0.72, 30.54 degrees, 0.74 gm/cm^3, 1.08 gm/cm^3, 15.28 m/s, and 1.22 m/s, respectively.

B. Design Calculations and Fabrication of Mini-Maize Cobs Threshing achine

The trapezoidal shape frame used in this machine was well-stable and suitable for supporting the assembly. The maximum permissible feed rate for this machine was 12.5 per minute, or 750 kg per hour. With a solid-shaped cylinder made of sheet metal, this machine obtained good dehusking and shelling efficiency with minimum damage to the grain. The designed hopper and outlet were successfully able to convey cobs and grain. At 30 mm concave clearance, this machine worked very well and obtained good shelling efficiency. The spring provided in the concave assembly was adjusted concave clearance according to the size of maize cobs. The designed blower was able to remove most of the trash from the grain and power transmission system successfully to transmit power. All the rotating components were covered by a shield. The overall machine worked safely and satisfactorily.

©IJRASET: All Rights are Reserved | SJ Impact Factor 7.538 | ISRA Journal Impact Factor 7.894 |

C. Performance Evaluation of Developed Mini Maize Cob Threshing Machine

The average feed rate (maize cobs) obtained at the fully open feed control shutter was 400 kg per hour. At a feed rate of 400 kg per hour, the total grain input, dehusking efficiency, shelling efficiency, cleaning efficiency, unthreshed grain, broken grain, blower loss, and total losses in percent were 271 kg per hour, 99.66 percent, 98.9 percent, 98.2 percent, 1.06 percent, 0.29 percent, 2.8 percent, and 4.15 percent, respectively.

TABLE IV TEST RESULTS

Sr. no	Particulars	Feed rate (Maize Cobs) = 400 kg/hour			
		R_1	R_2	R_3	**Mean**
1	Total grain input, (kg/hour)	270.4	262.6	280.4	**271.1**
2	Dehusking efficiency, (percent)	99	100	100	**99.66**
3	Shelling efficiency, (percent)	98.9	99.2	98.7	**98.9**
4	Cleaning efficiency, (percent)	98.3	97.8	98.6	**98.2**
5	Unthreshed grain, (percent)	1.1	0.8	1.3	**1.06**
6	Broken grain, (percent)	0.29	0.304	0.287	**0.29**
7	Blower loss, (percent)	2.5	3.1	2.8	**2.8**
8	Total losses, (percent)	3.89	4.2	4.38	**4.15**

Replication R_1, R_2, R_3 each was of 1-hour duration.

V. SUMMARY AND CONCLUSION

1) The machine was able to perform dehusking and shelling simultaneously.
2) The developed Mini Maize Cob Threshing Machine worked reliably, and the result obtained was satisfactory.
3) It was found that at the full opening of the feed control shutter, the feed rate was 400 kg per hour and the grain output capacity was 271 kg per hour, so this machine will be suitable for small and marginal farmers.
4) The developed machine was very compact and economical.
5) This machine separates only grain with minimum disturbance to cob (body), so it was found very energy efficient (271 kg per hour of grain output obtained from 2 HP power).
6) Easy to operate and maneuverable from one place to another.

VI. FUTURE SCOPE

1) In this machine, open-type concave was used, and due to that, the blower loss became higher, so there needs to be work on reducing blower loss.
2) Due to the wedging effect between maize cobs, it may get stuck sometimes, so conveying-type feeding systems need to reduce effort.
3) Due to the impact of cobs inside the system, it produces high noise, so we need to take measures for noise reduction.
4) Some modifications in this machine can help to develop a multi-crop thresher for small and marginal farmers.

VII. ACKNOWLEDGMENT

I consider myself to be extremely fortunate for an opportunity to do research work under the guidance of my research guide and chairman of my advisory committee, Dr. T. B. Bastewad, Professor and Principal Investigator, AICRP on FIM MPKV Rahuri. I am also thankful to the Advisory Committee Members, Dr. S. C. Bhangare and Dr. P. R. Sapkale. My heartfelt gratitude goes to Dr. S. M. Nalawade, Head of the Department of FMPE, Dr. A.S.C.A.E.T. (MPKV) Rahuri for their valuable guidance and support. I am also thankful to my batchmates Shivam Naik, Harshal Bagul, Saurav Shinde, and Bhushan Hukare for their support during the research work.

REFERENCES

[1] Jain, S. C. & Grace, Phillips (2019). Farm Machinery and Approach 'Harvesting and Threshing equipment'. Standard ISBN-13:818014030, 1, 85-115.

[2] Khurmi, R. S., & Gupta, J. K. (2005). A textbook of machine design (14th ed.). Eurasia Publishing House. (pp. 765-780).
[3] Sahay, K. M., & Singh, K. K. (1994). Unit operations of agricultural processing. Vikas Publishing House Private Limited, 45-65.
[4] Sharma, D. N., & Jain, M. (2008). Farm machinery design: Principles and problems. Jain Brothers 309-338.
[5] Gritlahare, B., Kumar, S., Dewangan, & Kolhe. (2020). Performance evaluation of solar-operated maize sheller. Pantnagar Journal of Research, 18(2), 175.
[6] Bosoi, E. S., Vershnev, O. V., Smirnov II, and Sultan Shake, E. G. Theory, Construction and Calculations of Agricultural Machines. Vol. II, Oxonin Press Private Limited, 1990, 469-469.
[7] Win, H., & Thar, M. T. H. (2020)., Design and structural analysis of shelling cylinder for maize sheller Corpus ID: 203080651,1-9
[8] Klenin, N. I., Popov, I. F., & Sakun, V. A. (1985). Agricultural machines. Amerind Publishing Co. Pvt. Ltd. 100-120.
[9] Mohsenin, N. N. (1970). Physical properties of plant and animal materials (2nd ed.). Golden and Breach Science Publishers. 56-91.
[10] Rudragouda, C., & Sushilendra. (2016). Investigation on engineering properties of maize for development of maize dehusker cum sheller. International Journal of Agriculture Sciences, 8(31), (1661-1665).
[11] Varshney, A. C., Tiwari, P. S., Narang, S., & Mehta, C. R. (2004). Data book for agricultural machinery. Central Institute of Agricultural Machinery, 150-175.
[12] ICAR-Indian Institute of Maize. India Maize Scenario (2023), https://iimr.icar.gov.in/?page_id=51.
[13] Maize sheller: Types, components, and working principles. eCourses., from https://ecoursesonline.iasri.res.in/mod/page/view.fm&e_2:lesson14.
[14] Chaudhary, S. (2016). Development and performance evaluation of modified maize dehusker cum sheller (Ph.D thesis, Allahabad Agricultural University) 1-91.
[15] Shinde, A. V. (2019). Design, Development, and Performance Evaluation of a Mobile Solar Powered Maize Dehusker Cum Sheller (Master's thesis, Odisha University of Agricultural & technology 1-40.
[16] Maize Vision 2022 (India Maize Summit 2022), a knowledge report: Achieving sustainable, ministry of agriculture 1-10.
[17] IS: 9020 – 2002: Power Thresher Safety Requirements (FAD 21: Farm Implements and Machinery), Indian Standard Institution, 4-31.
[18] IS: 6284 - 1985: Test code for power thresher for cereals (second revision), Indian Standard Institution 1-28.
[19] IS: 7051 - 1973: Specifications for maize sheller, Indian Standard Institution, 1-7.

©IJRASET: All Rights are Reserved | SJ Impact Factor 7.538 | ISRA Journal Impact Factor 7.894 |

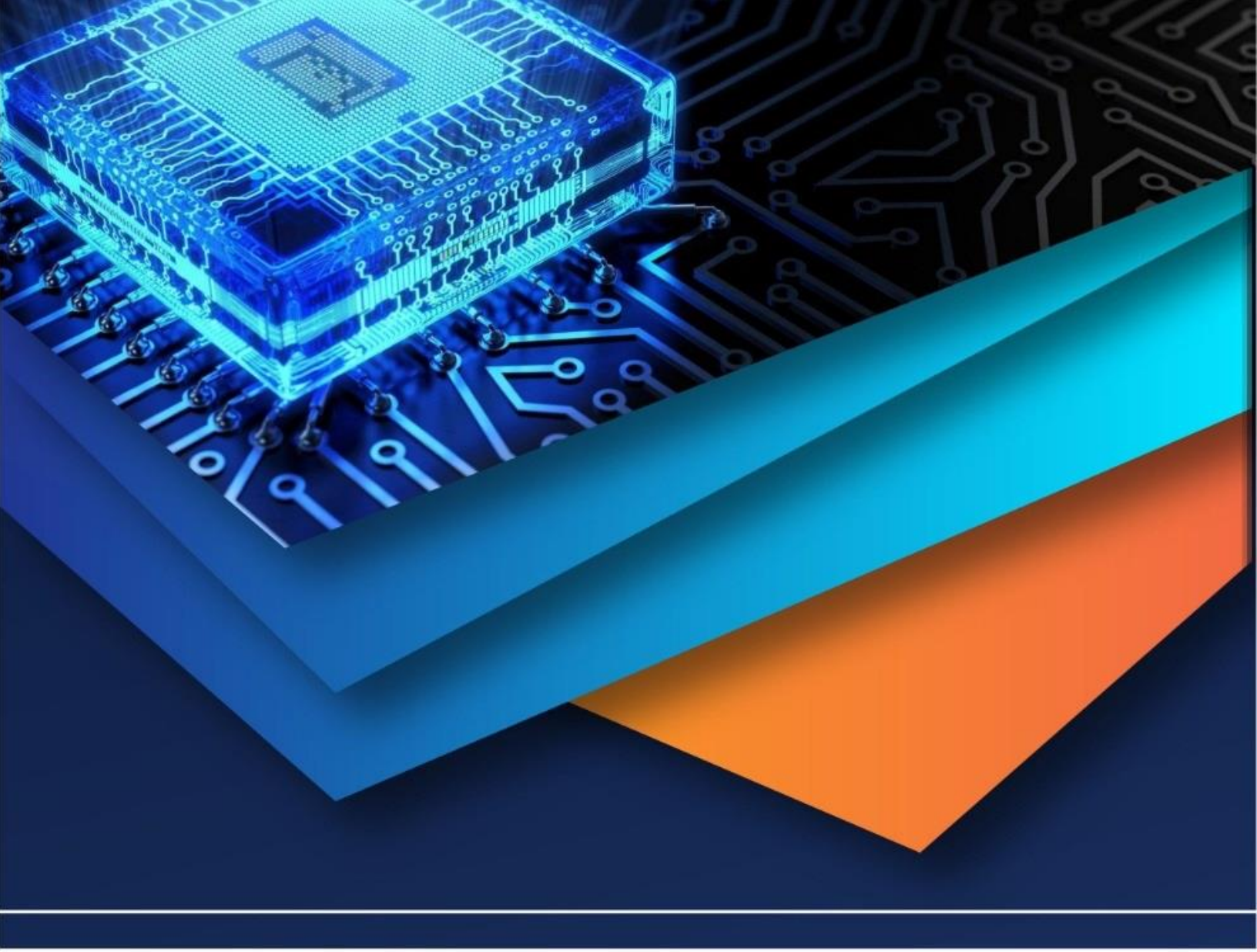

10.22214/IJRASET

45.98

IMPACT FACTOR: 7.129

IMPACT FACTOR: 7.429

INTERNATIONAL JOURNAL FOR RESEARCH

IN APPLIED SCIENCE & ENGINEERING TECHNOLOGY

Call : 08813907089 (24*7 Support on Whatsapp)