iJRASET
International Journal For Research in
Applied Science and Engineering Technology

INTERNATIONAL JOURNAL FOR RESEARCH

IN APPLIED SCIENCE & ENGINEERING TECHNOLOGY

Volume: 10 **Issue:** XII **Month of publication:** December 2022

DOI: https://doi.org/10.22214/ijraset.2022.48228

www.ijraset.com

Call: 08813907089 | E-mail ID: ijraset@gmail.com

International Journal for Research in Applied Science & Engineering Technology (IJRASET)
ISSN: 2321-9653; IC Value: 45.98; SJ Impact Factor: 7.538
Volume 10 Issue XII Dec 2022- Available at www.ijraset.com

Analysis of Steady State Availability of a Series–Parallel Repairable System with Hot Standbys, Three Units and Vacation

Sonam Bansal[1], Dr. Sharon Moses[2]
[1]*PhD Scholar,* [2]*Associate Professor, Department of Mathematics, St. John'S College, Agra , Dr. Bhim rao Ambedkar University, Agra*

Abstract: ***In this paper we analyze the steady state availability of a series-parallel repairable system. In this system, the first unit is master control unit and other two are slave units and one single repairman who operates single vacation. Under that assumption each unit has arbitrary repair time distribution & a constant failure rate. Also, it is noted that to calculate the availability of the system it is required to obtain the explicit expression and for obtaining steady-state probabilities it is necessary to use "the supplementary variable" method as well as "Markov process theory".***
Keywords: Availability, steady-state probability, vacation, series- parallel system, repairman.

I. INTRODUCTION

The study of a repairable system is one of the basic concept in reliability. A repairman in that system is epicenter who can affect the cost advantage of the system & influence towards performing of the system. To save time & cost an idle repairman takes a vacation for alternative job unless there is failed unit involved the system for repair. A system which can be repaired for operating normally in the event of any failure is known as repairable system.

Many researchers have presented three unit-repairable systems where the repairman always remain idle until the failed unit present. The reliability of a system with three units in a changing environment was studied by Song and Deny [1]. Kovalenenko [2] purposed a three-unit system consisting of one master control unit and two slave units with priority serving by a single repair facility. Stochastic analysis of a repairable system with three units and two different repair facilities was analyzed by Li. et al [3] and calculated the steady state reliability of the system. Hu et al. [4] found reliability of a system with three units, n failure modes and priority and derived the explicit expressions of the steady-state probabilities of the system. L.M. Hu et al. [5] gave reliability analysis of a three unit series parallel repairable system with priority and vacation.

In this paper there is one repairman and three-dissimilar units in which unit 1 is master control unit and units 2 and 3 are slave units. Unit 1 is considered as operative and one of slave unit remains operative while other slave unit is considered as hot stand by. We will analyze steady state availability and mean- up time of a series- parallel repairable system with a single vacation. Each unit has two binary modes either operating or in repair after failure when repairman is idle. When the first slave unit fails the hot standby is become operative and the failure unit is sent for repair. Repairman will be idle until the first failed unit appears.

II. ASSUMPTION AND DESCRIPTION OF SYSTEM MODEL

There are three dissimilar units called 1,2,3 in our system and one repairman with single vacation. When repairman returns from a vacation if he finds any failed units in the system then he starts to repair them and he does not take a vacation again until the first failed unit apprears.

1) The system is operating iff unit 1 and at least one of slave units (2 and 3) are working.
2) The system will be temporarily halted after failure; the up-time of units will be accumulated after the system re-operates.
3) A repaired unit works as good as new one.
4) The repair time distributions are general continuous and failure time distributions are exponential. The following relationship between the probability density function $f_k(x)$ and distribution function of repair time $F_k(x)$ is :

$$F_k(x) = \int_0^x f_k(t)dt = 1 - \exp\left(-\int_0^x \mu_k(t)\,dt\right)$$

Where r_k denote the mean time to repair unit k , $r_k = \int_0^\infty x\, dF_k(x)$

Similarly the relationship between the probability density function and distribution function of vacation time is: $V(x) = \int_0^x v(t)\,dt = 1 - \exp\left(-\int_0^x \eta(t)dt\right)$

The mean vacation time $(\theta) = \int_0^\infty x\,dV(x)$

the vacation rate function is denoted by $\eta(x)$

5) All random variables are mutually independent.

III. SYSTEM STATE EQUATIONS

State 0 : unit 1 and 2 are working, unit 3 is hot standby and repairman is on vacation.
State 1 : unit 1 is waiting for repair , unit 2 is working and unit 3 is hot standby.
State 2 : unit 1 is working and unit 2 is waiting for repair and unit 3 is hot standby.
State 3 : unit 1 and 2 are working and unit 3 is waiting for repair.
State 4 : unit 1 and 2 are waiting for repair, unit 3 is hot standby.
State 5 : unit 1 and 3 are waiting for repair and unit 2 is working.
State 6 : unit 2 and 3 are waiting for repair, unit 1 is working.
State 7 : unit 1 , 2 , 3 are waiting for repair.
State 8 : unit 1 and 2 are working and unit 3 is hot standby and repairman is idle.
State 9 : unit 1 being repaired, unit 2 working and unit 3 is hot standby.
State 10 : unit 1 is working, unit 2 being repaired, and unit 3 is hot standby.
State 11 : unit 1 and 2 are working, unit 3 being repaired.
State 12 : unist 1 being repaired, unit 2 is waiting for repair, unit 3 is hot standby.
State 13 : unit 1 being repaired, unit 2 is working, unit 3 is waiting for repair.
State14 : unit 1 is working, unit 2 being repaired, unit 3 is waiting for repair.
State 15 : unit 1 being repaired, unit 2 and 3 are waiting for repairs.
States 0, 2, 3, 8, 10, 11 are operable states and 1, 4, 5, 6, 7, 9, 12, 13, 14, 15 are inoperable states.
Define a stochastic process S(t) that takes values from state space :
J = { (0), (1), … , (15) }
S(t) is not a Markov process. For the repairman and each unit k (k = 1, 2, 3), by introducing the elapsed vacation time X(t) and the elapsed repair time $Y_k(t)$ at time t as the supplementary variables.
{ S(t), X(t), $Y_1(t), Y_2(t), Y_3(t)$} forms a vector markov process with state space :
$j^* = \{[(0),u],[(1),u],\dots,[(7),u],(8),[(9),x],[(10),y]$,[(11), z], [(12), x, y], [(13), x, z], [(14), y, z], [(15), x, y, z]}
Where u, x, y and z are the values taken by X(t), $Y_1(t), Y_2(t)$ *and* $Y_3(t)$ respectively.

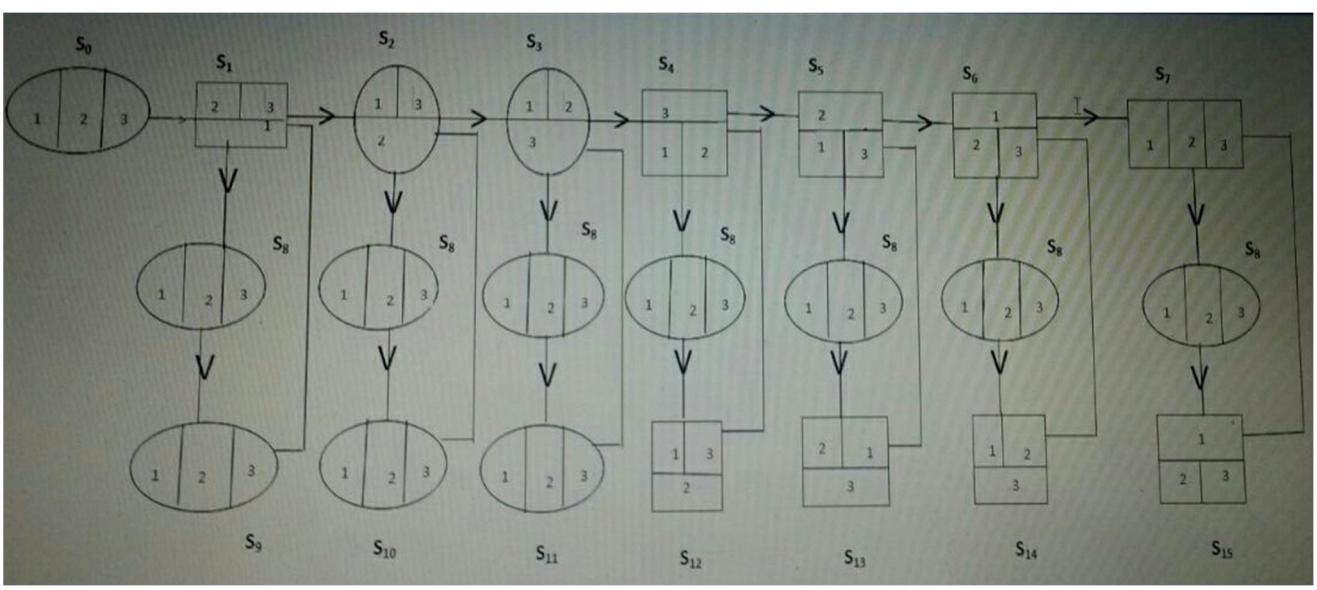

We introduce the following distribution functions :

$$Q_0(u,t) = P\{S(t) = (0), X(t) \le u\}$$
$$Q_1(u,t) = P\{S(t) = (1), X(t) \le u\}$$
$$Q_2(u,t) = P\{S(t) = (2), X(t) \le u\}$$
$$Q_3(u,t) = P\{S(t) = (3), X(t) \le u\}$$
$$Q_4(u,t) = P\{S(t) = (4), X(t) \le u\}$$
$$Q_5(u,t) = P\{S(t) = (5), X(t) \le u\}$$
$$Q_6(u,t) = P\{S(t) = (6), X(t) \le u\}$$
$$Q_7(u,t) = P\{S(t) = (7), X(t) \le u\}$$
$$Q_8(t) = P\{S(t) = (8)\}$$
$$Q_9(x,t) = P\{S(t) = (8), Y_1(t) \le x\}$$
$$Q_{10}(y,t) = P\{S(t) = (9), Y_2(t) \le y\}$$
$$Q_{11}(z,t) = P\{S(t) = (10), Y_3(t) \le z\}$$
$$Q_{12}(x,y,t) = P\{S(t) = (11),\ Y_1(t) \le x,\ Y_2(t) \le y\}$$
$$Q_{13}(x,z,t) = P\{S(t) = (12),\ Y_1(t) \le x,\ Y_3(t) \le z\}$$
$$Q_{14}(y,z,t) = P\{S(t) = (13),\ Y_2(t) \le y,\ Y_3(t) \le z\}$$
$$Q_{15}(x,y,z,t) = P\{S(t) = (14),\ Y_1(t) \le x,\ Y_2(t) \le y, Y_3 \le z\}$$

These distribution functions satisfy the following relations,

$$Q_{12}(0,y,t) = Q_{13}(0,z,t) = Q_{14}(0,z,t) = Q_{15}(0,y,z,t) = 0$$
$$Q_{12}(x,0,t) \ne 0,\ Q_{13}(x,0,t) \ne 0,\ Q_{14}(y,0,t) \ne 0$$

Density functions are :

$$q_0(u,t) = \frac{\partial}{\partial u} Q_0(u,t)$$
$$q_1(u,t) = \frac{\partial}{\partial u} Q_1(u,t)$$
$$q_2(u,t) = \frac{\partial}{\partial u} Q_2(u,t)$$
$$q_3(u,t) = \frac{\partial}{\partial u} Q_3(u,t)$$
$$q_4(u,t) = \frac{\partial}{\partial u} Q_4(u,t)$$
$$q_5(u,t) = \frac{\partial}{\partial u} Q_5(u,t)$$
$$q_6(u,t) = \frac{\partial}{\partial u} Q_6(u,t)$$
$$q_7(u,t) = \frac{\partial}{\partial u} Q_7(u,t)$$
$$q_9(x,t) = \frac{\partial}{\partial x} Q_9(x,t)$$
$$q_{10}(y,t) = \frac{\partial}{\partial y} Q_{10}(y,t)$$
$$q_{11}(z,t) = \frac{\partial}{\partial z} Q_{11}(z,t)$$
$$q_{12}(x,y,t) = \frac{\partial^2}{\partial x\, \partial y} Q_{12}(x,y,t)$$
$$q_{13}(x,z,t) = \frac{\partial^2}{\partial x\, \partial z} Q_{13}(x,z,t)$$
$$q_{14}(y,z,t) = \frac{\partial^2}{\partial y\, \partial z} Q_{14}(y,z,t)$$
$$q_{15}(x,t) = \frac{\partial}{\partial x} Q_{12}(x,0,t)$$
$$q_{16}(x,t) = \frac{\partial}{\partial x} Q_{13}(x,0,t)$$
$$q_{17}(y,t) = \frac{\partial}{\partial y} Q_{14}(y,0,t)$$

IV. RELATIONSHIP BETWEEN PROBABILITY AND DISTRIBUTION FUNCTIONS

$$P_0(t) = Q_0(\infty, t) = \int_0^\infty q_0(u,t)du$$
$$P_1(t) = Q_1(\infty, t) = \int_0^\infty q_1(u,t)du$$
$$P_2(t) = Q_2(\infty, t) = \int_0^\infty q_2(u,t)du$$
$$P_3(t) = Q_3(\infty, t) = \int_0^\infty q_3(u,t)du$$
$$P_4(t) = Q_0(\infty, t) = \int_0^\infty q_4(u,t)du$$
$$P_5(t) = Q_5(\infty, t) = \int_0^\infty q_5(u,t)du$$
$$P_6(t) = Q_6(\infty, t) = \int_0^\infty q_6(u,t)du$$
$$P_7(t) = Q_7(\infty, t) = \int_0^\infty q_7(u,t)du$$
$$P_9(t) = Q_9(\infty, t) = \int_0^\infty q_9(x,t)dx$$
$$P_{10}(t) = Q_{10}(\infty, t) = \int_0^\infty q_{10}(y,t)dy$$
$$P_{11}(t) = Q_{11}(\infty, t) = \int_0^\infty q_{11}(z,t)dz$$
$$P_{12}(t) = Q_{12}(\infty, \infty, t) = \int_0^\infty \int_0^\infty q_{12}(x,y,t)\,dx\,dy + \int_0^\infty q_{15}(x,t)dx$$
$$P_{13}(t) = Q_{13}(\infty, \infty, t) = \int_0^\infty \int_0^\infty q_{13}(x,z,t)\,dx\,dz + \int_0^\infty q_{16}(x,t)dx$$
$$P_{14}(t) = Q_{14}(\infty, \infty, t) = \int_0^\infty \int_0^\infty q_{14}(y,z,t)\,dydz + \int_0^\infty q_{17}(y,t)dy$$
$$P_{15}(t) = Q_{15}(\infty, \infty, t) = \int_0^\infty \int_0^\infty \int_0^\infty q_{15}(x,y,z,t)\,dxdydz.$$

integro-differential equations are :

The transitions occurring in t and $t + \Delta t$ time interval. The state of the system at time t and $t + \Delta t$ are ,

$$q_0(u + \Delta t, t + \Delta t) = q_0(u,t)[1 - (\lambda_1 + \lambda_2 + \lambda_3 + \eta(u)\,\Delta t)] + 0(\Delta t),$$
$$q_0(u + \Delta t, t + \Delta t) - q_0(u,t) = -q_0(u,t)[\lambda_1 + \lambda_2 + \lambda_3 + \eta(u)\,\Delta t] + 0(\Delta t)$$
$$\frac{q_0(u + \Delta t, t + \Delta t) - q_0(u,t)}{\Delta t} = -q_0(u,t)[\lambda_1 + \lambda_2 + \lambda_3 + \eta(u)] + \frac{0(\Delta t)}{\Delta t}$$

Taking $\Delta t \to 0$

$$\frac{\partial}{\partial t}[q_0(u,t)] + \frac{\partial}{\partial u}[q_0(u,t)] + [\lambda_1 + \lambda_2 + \lambda_3 + \eta(u)]\,q_0(u,t)$$
$$q_0(u,t)\left[\frac{\partial}{\partial t} + \frac{\partial}{\partial u} + \lambda_1 + \lambda_2 + \lambda_3 + \eta(u)\right] = 0 \qquad \dots (1)$$

For state 1 :

$$q_1(u + \Delta t, t + \Delta t) = q_1(u,t)[1 - (\eta(u)\,\Delta t)] + q_0(u,t)\lambda_1\Delta t + 0(\Delta t),$$

$$\frac{q_1(u + \Delta t, t + \Delta t) - q_1(u,t)}{\Delta t} = -\eta(u)q_1(u,t) + \lambda_1 q_0(u,t) + \frac{0(\Delta t)}{\Delta t}$$

Taking $\Delta t \to 0$

$$q_1(u,t)\left[\frac{\partial}{\partial t}+\frac{\partial}{\partial u}+\eta(u)\right]=\lambda_1 q_0(u,t) \qquad \dots(2)$$

Similarly for all states, we have following integro-differential equations:

$$q_2(u,t)\left[\frac{\partial}{\partial t}+\frac{\partial}{\partial u}+\lambda_1+\lambda_3+\eta(u)\right]=\lambda_2 q_0(u,t) \qquad \dots(3)$$

$$q_3(u,t)\left[\frac{\partial}{\partial t}+\frac{\partial}{\partial u}+\lambda_1+\lambda_2+\eta(u)\right]=\lambda_3 q_0(u,t) \qquad \dots(4)$$

$$q_4(u,t)\left[\frac{\partial}{\partial t}+\frac{\partial}{\partial u}+\eta(u)\right]=\lambda_1 q_2(u,t) \qquad \dots(5)$$

$$q_5(u,t)\left[\frac{\partial}{\partial t}+\frac{\partial}{\partial u}+\eta(u)\right]=\lambda_1 q_3(u,t) \qquad \dots(6)$$

$$q_6(u,t)\left[\frac{\partial}{\partial t}+\frac{\partial}{\partial u}+\eta(u)\right]=\lambda_2 q_3(u,t)+\lambda_3 q_2(u,t) \qquad \dots(7)$$

$$q_7(u,t)\left[\frac{\partial}{\partial t}+\frac{\partial}{\partial u}+\eta(u)\right]=\lambda_1 q_3(u,t)+\lambda_2 q_3(u,t)+\lambda_3 q_2(u,t) \qquad \dots(8)$$

$$\left[\frac{d}{dt}+\lambda_1+\lambda_2+\lambda_3\right]p_8(t)=\int_0^\infty \eta(u)\,q_0(u,t)\,du \qquad \dots(9)$$

$$\left[\frac{\partial}{\partial t}+\frac{\partial}{\partial x}+\mu_1(x)\right]q_9(x,t)=0 \qquad \dots(10)$$

$$\left[\frac{\partial}{\partial t}+\frac{\partial}{\partial y}+\lambda_1+\lambda_3+\mu_2(y)\right]q_{10}(y,t)=\int_0^\infty \mu_1(x)\,q_{12}(x,y,t)\,dx \qquad \dots(11)$$

$$\left[\frac{\partial}{\partial t}+\frac{\partial}{\partial z}+\lambda_1+\lambda_2+\mu_3(z)\right]q_{11}=q_{13}(x,z,t)\,dx + \int_0^\infty \mu_2(y)\,q_{14}(y,z,t)\,dy \qquad \dots(12)$$

$$\left[\frac{\partial}{\partial t}+\frac{\partial}{\partial x}+\mu_1(x)\right]q_{12}(x,y,t)=0 \qquad \dots(13)$$

$$\left[\frac{\partial}{\partial t}+\frac{\partial}{\partial x}+\mu_1(x)\right]q_{16}(x,t)=0 \qquad \dots(14)$$

$$\left[\frac{\partial}{\partial t}+\frac{\partial}{\partial x}+\mu_1(x)\right]q_{13}(x,z,t)=0 \qquad \dots(15)$$

$$\left[\frac{\partial}{\partial t}+\frac{\partial}{\partial x}+\mu_1(x)\right]q_{17}(x,t)=0 \qquad \dots(16)$$

$$\left[\frac{\partial}{\partial t}+\frac{\partial}{\partial x}+\mu_2(y)\right]q_{14}(y,z,t)=0 \qquad \dots(17)$$

$$\left[\frac{\partial}{\partial t}+\frac{\partial}{\partial x}+\mu_2(y)\right]q_{18}(y,t)=\lambda_3 q_{10}(y,t) \qquad \dots(18)$$

$$\left[\frac{\partial}{\partial t}+\frac{\partial}{\partial x}+\mu_1(x)\right]q_{15}(x,y,z,t)=0 \qquad \dots(19)$$

$$\left[\frac{\partial}{\partial t}+\frac{\partial}{\partial x}+\mu_1(x)\right]q_{19}(x,t)=\lambda_3 q_{10}(y,t)+\lambda_2 q_{11}(z,t) \qquad \dots(20)$$

boundary conditions are given :

$$q_0(0,t)=\int_0^\infty \mu_1(x)q_9(x,t)\,dx+\int_0^\infty \mu_2(y)q_{10}(y,t)dy+\int_0^\infty \mu_3(z)\,q_{11}(z,t)dz+\delta(t) \qquad \dots(21)$$

$$q_i(0,t)=0 \qquad (i=1,2,3,\dots,6,7) \qquad \dots(22)$$

$$q_9(0,t)=\lambda_1 p_8(t)+\int_0^\infty \eta(u)q_1(u,t)\,du \qquad \dots(23)$$

$$q_{10}(0,t)=\lambda_2 p_8(t)+\int_0^\infty \eta(u)q_2(u,t)\,du+\int_0^\infty \mu_1(x)\,q_{16}(x,t)dx \qquad \dots(24)$$

$$q_{11}(0,t) = \lambda_3 p_8(t) + \int_0^\infty \eta(u) q_3(u,t)\, du + \int_0^\infty \mu_1(x)\, q_{17}(x,t)\, dx + \int_0^\infty \mu_2(y)\, q_{18}(y,t)\, dy \quad \text{... (25)}$$

$$q_{12}(0,y,t) = \lambda_1 q_{10}(y,t) \quad \text{... (26)}$$

$$q_{13}(0,z,t) = \lambda_1 q_{11}(z,t) \quad \text{... (27)}$$

$$q_{14}(0,z,t) = \lambda_2 q_{11}(z,t) \quad \text{... (28)}$$

$$q_{15}(0,y,z,t) = \lambda_1 q_{10}(y,t) + \lambda_2 q_{11}(z,t) \quad \text{... (26)}$$

$$q_j(0,t) = \int_0^\infty \eta(u) q_{j-11}(u,t) du \ ,$$

$$(j = 16,17,18,19) \quad \text{...(27)}$$

And the only nonzero initial condition $q_0(u,0) = \delta(u)$ is the Dirac delta function.

Calculation of steady-state characteristics equations

The ergodicity of the investigated process ensures the existence of the following steady-state probability :

$$p_i = \lim_{t\to\infty} p_i(t) \qquad (i = 0,1,\dots,15)$$

$$q_i(u) = \lim_{t\to\infty} q_i(u,t) \qquad (i = 0,1,\dots,7,9,10,11,16,17,18)$$

$$q_j(u,v) = \lim_{t\to\infty} q_j(u,v,t) \qquad (j = 12,13,14,19)$$

$$q_k(u,v,w) = \lim_{t\to\infty} q_i(u,v,w,t) \qquad (k = 15)$$

Which obey the following relations :

$$p_i = \int_0^\infty q_i(u) du \qquad (i = 0,1,\dots,7,9,10,11) \quad \text{...(28)}$$

$$p_j = \int_0^\infty \int_0^\infty q_j(u,v) du\, dv + \int_0^\infty q_{j+4}(u) du \ (j = 12,13,14,15) \quad \text{... (29)}$$

By taking the limit $t \to \infty$ in equations (1) – (27), we can obtain:

$$\frac{d}{du} q_0(u) + [\lambda_1 + \lambda_2 + \lambda_3 + \eta(u)]\, q_0(u) = 0 \quad \text{... (30)}$$

$$\frac{d}{du} q_1(u) + \eta(u)\, q_1(u) = \lambda_1 q_0(u) \quad \text{... (31)}$$

$$\frac{d}{du} q_2(u) + [\lambda_1 + \lambda_3 + \eta(u)]\, q_2(u) = \lambda_2 q_0(u) \quad \text{... (32)}$$

$$\frac{d}{du} q_3(u) + [\lambda_1 + \lambda_2 + \eta(u)]\, q_3(u) = \lambda_3 q_0(u) \quad \text{... (33)}$$

$$\frac{d}{du} q_4(u) + \eta(u)\, q_4(u) = \lambda_1 q_2(u) \quad \text{... (34)}$$

$$\frac{d}{du} q_5(u) + \eta(u)\, q_5(u) = \lambda_1 q_3(u) \quad \text{... (35)}$$

$$\frac{d}{du} q_6(u) + \eta(u)\, q_6(u) = \lambda_2 q_3(u) + \lambda_3 q_2(u) \quad \text{... (36)}$$

$$\frac{d}{du} q_7(u) + \eta(u)\, q_7(u) = \lambda_1 q_3(u) + \lambda_2 q_3(u) + \lambda_3 q_3(u) \quad \text{... (37)}$$

$$(\lambda_1 + \lambda_2 + \lambda_3)\, p_8 = \int_0^\infty \eta(u)\, q_0(u)\, du \quad \text{... (38)}$$

$$\frac{d}{dx} q_9(x) + \mu_1(x) q_9(x) = 0 \quad \text{... (39)}$$

$$\frac{d}{dy} q_{10}(x) + [\lambda_1 + \lambda_3 + \mu_2(y)]\, q_{10}(y) = \int_0^\infty \mu_1(x)\, q_{12}(x,y) dx \quad \text{... (40)}$$

$$\frac{d}{dz} q_{11}(z) + [\lambda_1 + \lambda_2 + \mu_3(z)] q_{11}(z) = \int_0^\infty \mu_1(x)\, q_{13}(x,z) dx + \int_0^\infty \mu_2(y)\, q_{14}(y,z) dy \quad \text{... (41)}$$

$$\frac{\partial}{\partial x} q_{12}(x,y) + \mu_1(x) q_{12}(x,y) = 0, \qquad \frac{d}{dx} q_{16}(x) + \mu_1(x) q_{16}(x) = 0 \qquad \dots (42)$$

$$\frac{\partial}{\partial x} q_{13}(x,z) + \mu_1(x) q_{13}(x,z) = 0, \qquad \frac{d}{dx} q_{17}(x) + \mu_1(x) q_{17}(x) = 0 \qquad \dots (43)$$

$$\frac{\partial}{\partial y} q_{14}(y,z) + \mu_2(y) q_{14}(y,z) = 0, \qquad \frac{d}{dy} q_{18}(y) + \mu_2(y) q_{18}(y) = \lambda_3 q_{10}(y) \qquad \dots (44)$$

$$q_0(0) = \int_0^\infty \mu_1(x) q_9(x) dx + \int_0^\infty \mu_2(y) q_{10}(y) dy + \int_0^\infty \mu_3(z) q_{11}(z) dz \qquad \dots (45)$$

$$q_i(0) = 0 \quad (i = 1, 2, \dots, 7), \qquad q_9(0) = \lambda_1 p_8 + \int_0^\infty \eta(u) q_1(u) du \qquad \dots (46)$$

$$q_{10}(0) = \lambda_2 p_8 + \int_0^\infty \eta(u) q_2(u) du + \int_0^\infty \mu_1(x) q_{16}(x) dx \qquad \dots (47)$$

$$q_{11}(0) = \lambda_3 p_8 + \int_0^\infty \eta(u) q_3(u) du + \int_0^\infty \mu_1(x) q_{17}(x) dx + \int_0^\infty \mu_2(y) q_{18}(y) dy \qquad \dots (48)$$

$$q_{12}(0,y) = \lambda_1 q_{10}(y), \qquad q_{13}(0,z) = \lambda_1 q_{11}(z), \qquad \dots (49)$$

$$q_{14}(0,z) = \lambda_2 q_{11}(z), \qquad \dots (50)$$

$$q_{15}(0,y,z) = \lambda_1 q_{10}(y) + \lambda_2 q_{11}(z) \qquad \dots (51)$$

$$q_j(0) = \int_0^\infty \eta(u) q_{j-11}(u) du, \qquad \dots (52)$$

$$(j = 16, 17, 18, 19)$$

By using the theory of first – order , linear, ordinary differential equations. We can obtain the solution of the above equations (30) – (52). Moreover we obtain the steady state probabilities p_k (k = 0, 1, …, 15) .

1) *Steady- State Availability*

$$A = p_0 + p_2 + p_3 + p_8 + p_{10} + p_{11}$$

2) *Mean up-time*

$$MUT = \frac{A}{M},$$

Where M is the rate of failures of this system,

$$M = \lambda_1 p_0 + (\lambda_1 + \lambda_3)(p_2 + p_{10}) + (\lambda_1 + \lambda_2)(p_3 + p_{11}) + \lambda_1 p_8 .$$

REFERENCES

[1] S.B. Song, Y.L. Deng (1993) : Reliability analysis of a three-unit system in a changing environment, Micro electron. Reliability, Vol. 33, pp. 637-640 .
[2] B.H. Su, D.H. Shi (1995) : Reliability analysis of n-unit series systems with multiple vacations of a repairman, Math. Stat. Appl. Probab. Vol. 10, pp. 78-82.
[3] W. Li. A.S. Alfa, Y.Q. Zhao (1998) : Stochastic analysis of a repairable system with units and two repair facilities, Microelectron. Reliab. Vol. 38, pp. 585-595.
[4] A.I. Kovalenko (2001) : Analysis of the reliability of a three component system with renewal, J.Math. sci. vol. 103, pp. 273-277.
[5] L.M. Hu, D.Q. Yue, R.L. Tian (2009) : Reliability analysis of a three-unit system with n failure modes and priority, J. Computer information system, vol. 5, pp. 253-258.
[6] L.M. Hu, J.D. L (2009) : Reliability analysis of a three- unit system with vacation and priority, ICIC Exp. Lett. Vol. 3, pp. 171-176.

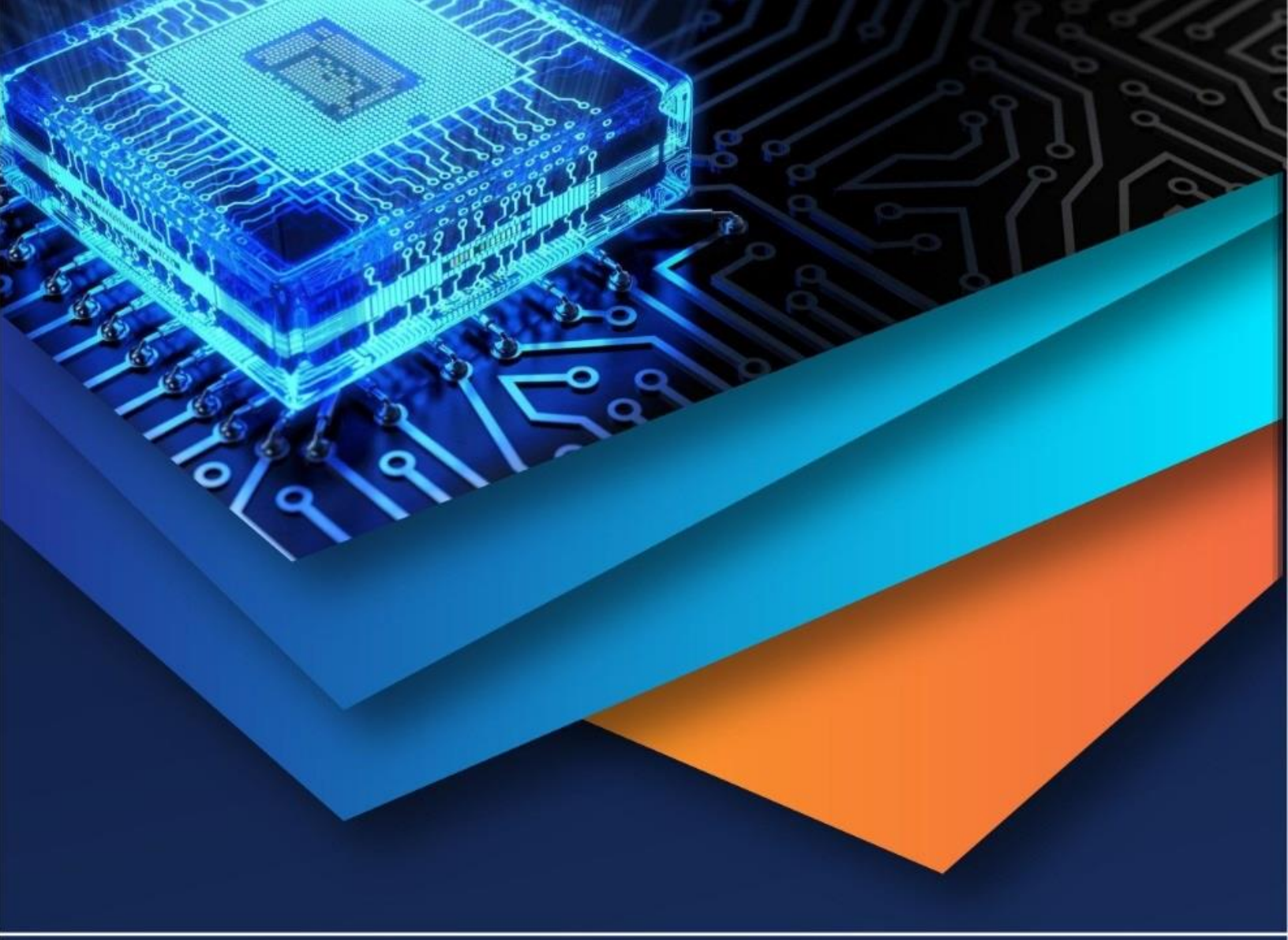

10.22214/IJRASET

45.98

IMPACT FACTOR: 7.129

IMPACT FACTOR: 7.429

INTERNATIONAL JOURNAL FOR RESEARCH

IN APPLIED SCIENCE & ENGINEERING TECHNOLOGY