iJRASET
International Journal For Research in Applied Science and Engineering Technology

INTERNATIONAL JOURNAL FOR RESEARCH

IN APPLIED SCIENCE & ENGINEERING TECHNOLOGY

Volume: 11 **Issue:** V **Month of publication:** May 2023

DOI: https://doi.org/10.22214/ijraset.2023.51382

www.ijraset.com

Call: 08813907089 | E-mail ID: ijraset@gmail.com

International Journal for Research in Applied Science & Engineering Technology (IJRASET)
ISSN: 2321-9653; IC Value: 45.98; SJ Impact Factor: 7.538
Volume 11 Issue V May 2023- Available at www.ijraset.com

Automatic Restaurant Ordering System

Rutuja Chandekar[1], Nancy Sawant[2], Shahzeen Budye[3], Sahil Nagvekar[4], Prof. A. R. Sutar[5]
Department Of Electronics and Telecommunication Engineering, Finolex Academy of Management and Technology, Ratnagiri, India

Abstract: Automation is a technology concerned with the application of mechanical, electronic and computer systems. This article provides an overview of the various methods and techniques used for restaurant automation. In restaurants, menus are available on every table. The customer can refer it and order through the waiter. The customer has to wait for the waiter. Even a restaurant manager finds it difficult to keep up with changing menu prices. At the same time, adding a new menu to the same card becomes a tedious job for whoever is responsible for this work, as changing the menu within a short period of time can lead to an increase in costs.

Keywords: STM32, Bluetooth, LCD, Keypad, Menu, Order

.

I. INTRODUCTION

Dining is enjoyed by everyone on vacations, holidays and other activities. Customer always appreciate the quality of service provided by restaurants if restaurant serve as per customer's needs and this all depends on the dining and the quality of service provided by them to the customers. But sometimes there is a delay in this service and the customers get irritated. It is not the fault of either the hotel staff due to the workload of taking continuous orders and customers are also in a jiffy to move ahead in their routine work.

The adoption of the restaurant ordering system has changed the old, established system. Most customers utilize restaurants for their new, more effective ordering systems. The typical ordering process is inconvenient for both staff and clients because it involves a lot of human labor. The crews' labor will result in certain human blunders, such erroneous orders, handing customers the wrong bills, and unattractive waiters' handwriting. The restaurant's unhappy customers are to blame for all of these human faults. Consequently, a restaurant ordering system can aid in better management. This ordering system decreased the amount of time needed to enter orders. Customers do not have to wait long to be served when dining out. With this ordering system, more customers will be pleased.

The literature overview and review will be covered in the first section of this paper. The proposed system will be explained together with the simulation results.

II. OVERVIEW OF LITERATURE SURVEY WITH REVIEW DISCUSSION:

In [1] they developed a menu for automatic ordering of meals in a restaurant. The order information from the table is transferred and then given to the manager or cashier and displayed on the LCD screen in the food preparation kitchen. This would reduce the need to print many copies of the menu. The menu should be quickly updated and processed by the restaurant staff as in the case of written menus. Order items are frequently updated in the system, which will also reduce confusion between customer and waiter if something new is served or fake orders are eliminated. Their model recommends that the restaurant use a digital menu instead of regular menus, which would have a number of advantages over the traditional system. This system will reduce the time a waiter needs to take an order. It will also increase the accuracy of the system.

In [2] it makes the whole process in the restaurant to be done automatically starting from welcoming the customer to payment of the bill. The proposed system consists of three main blocks. The first block deals with the ordering process through which the customer can order the food item without the need of the server. The customer table is provided with a keypad and LCD display using which the customer can type the item code and can see the ordered food item along with the cost respectively. The second block is to serve the ordered food to the customer. It is done by using the food serving robot. It will modify the real-time problem of time delay and delivery of incorrect food items. It consists of the vehicle which moves according to the sensor output. The robot consists of a proximity sensor to count the wheel rotation and an IR sensor for obstacle detection. The third block is for payment of the bill amount. The cost of the ordered food item will be displayed to the customer at the time of ordering itself and if the customer finished ordering, the total amount of the ordered food item will be calculated and the entire bill amount will be displayed to the

customer. The other technique in this paper includes the common display of available food items with their code so that the customer can be aware of the menu. There will be a helping technique available at each customer table which is used by the customer to order the food item. In this technique, the instruction for the entire process will be played at the time of ordering the food item. The use of robots is a good option to reduce manpower but it also increases the cost of the project.

In [3], advanced technology such as touch screen menu display and IoT are adopted into system. The tendency of this system is to elevate the service of the dining table. This system has a touch-sensitive menu on the table and the customer gives the order to the restaurant server using their fingers. Therefore, this project aims to support the processes needed by restaurant staff and allow them to focus on the important part friendly customer service. By tailoring this goal to customers, this project enhances the overall experience on their next trip to the restaurant. The project is focused on the ordering process; kitchen organization and customer business processes such as invoice management. It provides a digital control system for each of these processes.

The touch screen will facilitate the ordering process and will be suitable for every customer.

Wireless data access to servers is implemented in [4]. The user's mobile Android app will have all the information regarding the offer. The central database is wirelessly updated with the customer's mobile phone's order information, which is subsequently transmitted to the kitchen and cashier. Menu changes can be readily managed by a restaurant owner. The cashier department and the culinary department are the two distinct departments found in restaurants. The order is seen on the kitchen screen in the cooking department. The second and third servers are in contact with the first server to process payments and transfer orders to the restaurant for processing. The JAVA programming language is used to create the system. The user interface of this technology is created using the Android operating system, which is based on Linux. On his laptop or desktop, the system administrator will use the Ubuntu operating system. Information is sent from the customer to the kitchen and reception using Wi-Fi (Wireless Fidelity).

This approach works well for Android users, but it will be problematic for diners who do not have an Android device.

In [5,] a robot performs the entire process in restaurants; with this application, the customer simply orders through his mobile phone and does not have to wait for the waiter. Robotic waiters will lessen the issues that human waiters cause, and a smart menu rather than a paper menu will promote the "go green" movement. The kitchen area will immediately interface with this application. The table number (from which the order originated) and the food items requested at that specific table are the criteria that the kitchen side requires. With only a few clicks, customers can explore and place orders from an online menu that is managed quickly and easily by the system. Customers must go to robot hotels or restaurants to place orders. A bookmark that is already on the table or a customer's phone can be used to place an order. In addition to serving robots, this research focuses on intelligent ordering systems that will be implemented in restaurants. The system's block diagram is displayed in Fig. 1.

The cost of the project will go up for small restaurants in rural areas due to the use of robots.

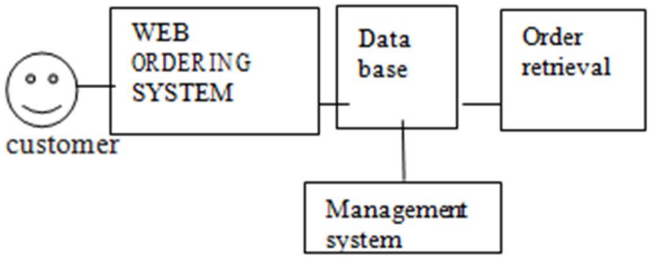

Fig 1. Block diagram of [5]

It shows the entire system connection

The method through which Zig-bee delivers data from the transmitter to the receiver was developed in [6]. At the transmitter (the customer table) and receiver (the kitchen), there are two ARM microcontrollers. When a customer arrives at the table, they can use the provided graphic LCD touch screen to choose their order. The consumer has the opportunity to choose the MENU item with the image by seeing it on the GLCD, which shows products with related photos or pictures. The item will be shown on the LCD in the receiver portion once the consumer has made their selection. If the transmitter has a microphone, a user may also choose an item by speaking their choice. The usage of voice is a novel option in this system.

It's a good idea to use the microphone to select the menu.

But poor pronunciation can be problematic.

The goal of [7] is to provide a user-friendly interface, service navigation, and low cost while also extending the wireless communication system's service range, speeding up order processing, and reducing paperwork and human error. This system suggests a restaurant with a touch- technology system as an alternative to the conventional systems. The customer notices the card with the categories on the table. The server enters the orders into the portable Android device. Wi-Fi is used to transmit the orders to the kitchen. If the food is available or not, the kitchen staff will send a notification. The waiter in the kitchen serves the food at the appropriate table after receiving a notification from the kitchen staff that it has been prepared. If the food menu needs to be changed, the manager makes the necessary changes. The database contains changes to the menu. The waiter's android device is then updated with the new menu.

The system is pricey because it requires use of an android device.

The planned Paperless restaurant system in [8] was created, and it functions well on android phones. User, Kitchen, and Admin modules are among its three components. Here, Admin has the option to manage the restaurant's entire system. The system will become more popular as a result of the elimination of wired connectivity. The Wi-Fi network will be used to transfer the consumer orders. The administrator has the ability to add products, make offers, view user feedback, and view the bill. After the food is served, users can offer feedback. The customer will be notified whether the Kitchener accepts or rejects the offer. Customers enjoy a wonderful dining experience because to this system's cost-effective convenience for both them and the business. The solution enables us to receive client feedback in real-time and makes it simple for the admin to update and make various offers known at various times.

The use of an Android phone to place a meal order will make it difficult for individuals without one to do so.

A model is developed in [9]; it is split into two sections, the kitchen section and the table section. A signal is conveyed to the table, and communication is one-way. There are seven buttons, each with a specific purpose. The menu button comes first; when pressed, the accessible menu appears on the LCD. When the customer uses the select button to choose breakfast, the sub-options are displayed, and an increment is made by pushing the increment button. After that, the customer can choose the menu. By pressing the amount button, the number of the menu will grow if the consumer wishes to order one meal in various quantities. The customer then sends the order to the kitchen using the send button. If a consumer wants to cancel an order, they can do so simply clicking the cancel button, which will cancel the order quickly. Computer display - The following format will appear on the screen after the computer receives the command via USB. a paneer kurma65/-Number: 4 This is how the automatic one-way menu ordering system method is carried out. It has a controller, character ROM, data RAM, and K7805 (regulator) resistor-capacitor for the display, transmitter, and receiver. The block diagram is shown in Figure 2.

This method is incredibly effective, simple to use, and provides comprehensive information on the ordering process directly on the LCD screen.

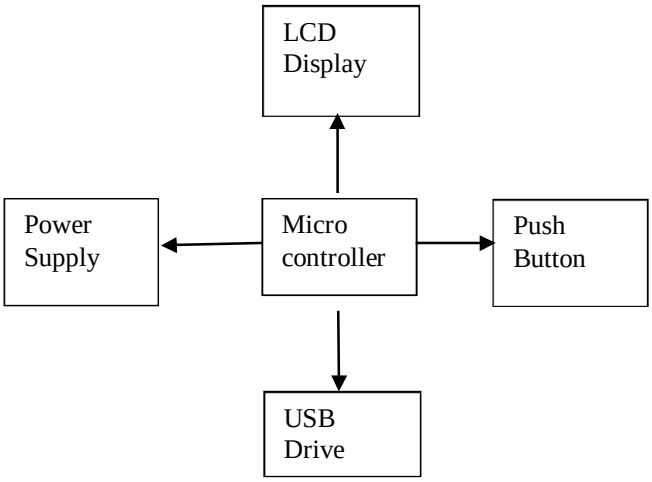

Fig 2. Block Diagram of [9]

Shows how the controller will connect to the other components.

III. PROPOSED SYSTEM

The customer's table is where the system begins. The system is initialized and shows the name of the system when the customer is seated at the table. The several menus are displayed on an LCD screen; the consumer must choose the quantity of a specific food item by hitting the designated key on the keypad. The whole food item bill is displayed on the screen after picking quantities. Now, Bluetooth is being used to send this order to the kitchen side. On the receiver section, the given order will be visible. The proposed system's block diagram is shown below:

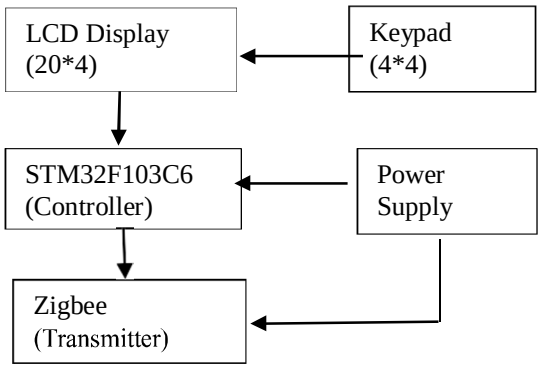

Fig 3. Block Diagram of Customer Table (Transmitter Section)

It shows how the LCD display will connect to controller and also the components used in connection.

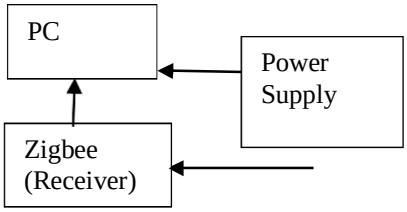

Fig4. Block Diagram of Counter (Receiver Section)

It shows the connection of receiver section where the order will be accepted.

IV.RESULT

Softwares such as Proteus and STM32CubeIDE are used to simulate the suggested system. The restaurant's name and a welcome screen will appear on the first screen, as seen in figure 5. The menus and quantity will then be displayed after a set amount of time (figure 6). After a pause, a screen for entering the choice and quantity of food items will appear, as illustrated in figure 7. Following menu selection, the total cost of the chosen items is displayed (Figure 8). The customer will have a set amount of time to cancel the order; beyond that, the cancellation will not be possible. Below are a few of the final hardware results:

Figure 5. depicts the system's initial display.

Following a brief delay, the next input will display after it has been shown for a while

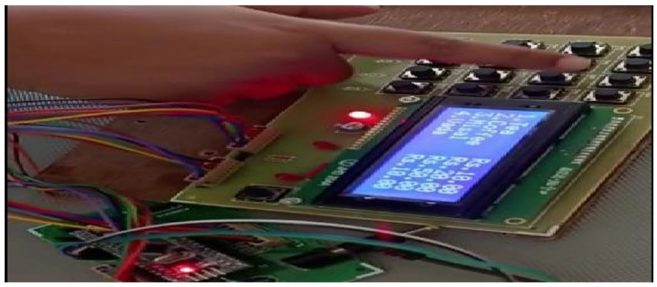

Figure 6 displays the prices and menus.

The information about the menus and the appropriate dish number will be provided to the customer.

Figure 7 illustrates the possibility to give the order.

The customer must enter both the quantity and the appropriate number for each food item they are ordering.

Figure 8. Shows the total bill of selected menus.

Customers can continue to add menus up until they click the "OK" button, at which point further menus will be added and the final total will be shown.

Figure 9. Bluetooth-received order displayed on computer

The table below was created to compare the suggested system using a literature review. It provides the remark and comments on both the suggested system and the literature review.

TABLE I

Sr No.	Comparison of review and proposed system		
	Literature review	*Proposed system*	*remark*
1.	[1] HMI display and RF transceiver	LCD and Zigbee is used	LCD and Zigbee will Reduce the cost
2.	[2] Robot are used instead of self service.	Option waiter available for is	The use of robots is a good option to reduce manpower but it also increases the cost of the project
3.	[3] Android phone and Raspberry Pi is used	LCD and keypad are used for input	Android Phone Is required so it will become costly
4.	[4] Customer can order through the own mobile.	LCD keypad and used are ordering for	It will create a problem for those people who are not using android in this type of restaurant.
5.	[6] Microphone is used to give the input	keypad is used for ordering	Selecting the menu using microphone is a good option. But incorrect pronunciation can cause a problem

V. CONCLUSION

Technology has advanced greatly because of its benefits, including low cost and simplicity of use. The idea of restaurant automation is novel and will undoubtedly astonish many. This approach enhances the performance of the restaurant personnel by being simple, effective, and convenient. Additionally, it will deliver high- quality services that satisfy customers. It will unquestionably alter how people eat and their eating patterns. Increased sales, better understanding of the customer's food preferences, and a positive customer experience would all result from this.

REFERENCES

[1] M.Kousalya,E. Lakshi, R.K.Mukesh Kanna, G. Pravin,T.Prabhu, “Automatic Restaurant Food Ordering Menu Card”,ICARD, Volume 03 Issue 03S March 2021.
[2] Shiny.J.S, Ashok Kumar M, Nanthagopal. V, Raguram. R,“Automation of Restaurant (Ordering, Serving, Billing”, IJAREEIE, Vol. 6, Issue 3, March 2017.
[3] PATIVANDANA, M. RAMBABU, M. VENKATESH, “eRestaurant Management System Using IOT”, IJCRT, Volume 6, Issue 2 April 2018.
[4] Patel Krishna M., Patel Palak P., Raj Nirali R., Patel Lalit A, “Automated Food Ordering System”, RTEECE,17th-18th- April2015.
[5] Neelima Mishra, Dr. Dinesh Goyal, Dr. Ashish Dutt Sharma, “Automation in Restaurants: Ordering to Robots in Restaurant via Smart Ordering System “International Journal of Converging Technologies and Management (IJCTM) Volume 4, Issue 1, 2018.
[6] Dr. Shaik Meeravali, K.Sudhakar,M.Swathi, “Design of the Restaurant Self-Ordering System Based on Zigbee Technology. (Using ARM cortex microcontroller and color GLCD)”, IJERT, Vol. 2 Issue 9, September – 2013.
[7] Mahendra Chouhan, Ankit Tiwari, Neha Agarwal, Priyanka Patkar, Namrata Kumbhar, Prof. P. S. Kulkarni, “Automated Table Ordering System” 123456Computer Science, SGI, Maharashtra, India.
[8] Hari Krishna H, Kavitha S J, Shailaja K, Suma T N, V Shreenidhi, “PAPERLESS RESTAURANT SYSTEM”, International Journal For Technological Research In Engineering Volume 6, Issue 9, May-2019, India.
[9] B. P. Desai, Suman chandrakant Mane, Pritee Kailash Nishad, Rekha Anil Mane,Rohini Tukaram Tavare, “Automatic Menu Ordering System”,International Journal of Research in Engineering, Science and Management (IJRESM),Volume-2, Issue-2, February-2019,India.

.

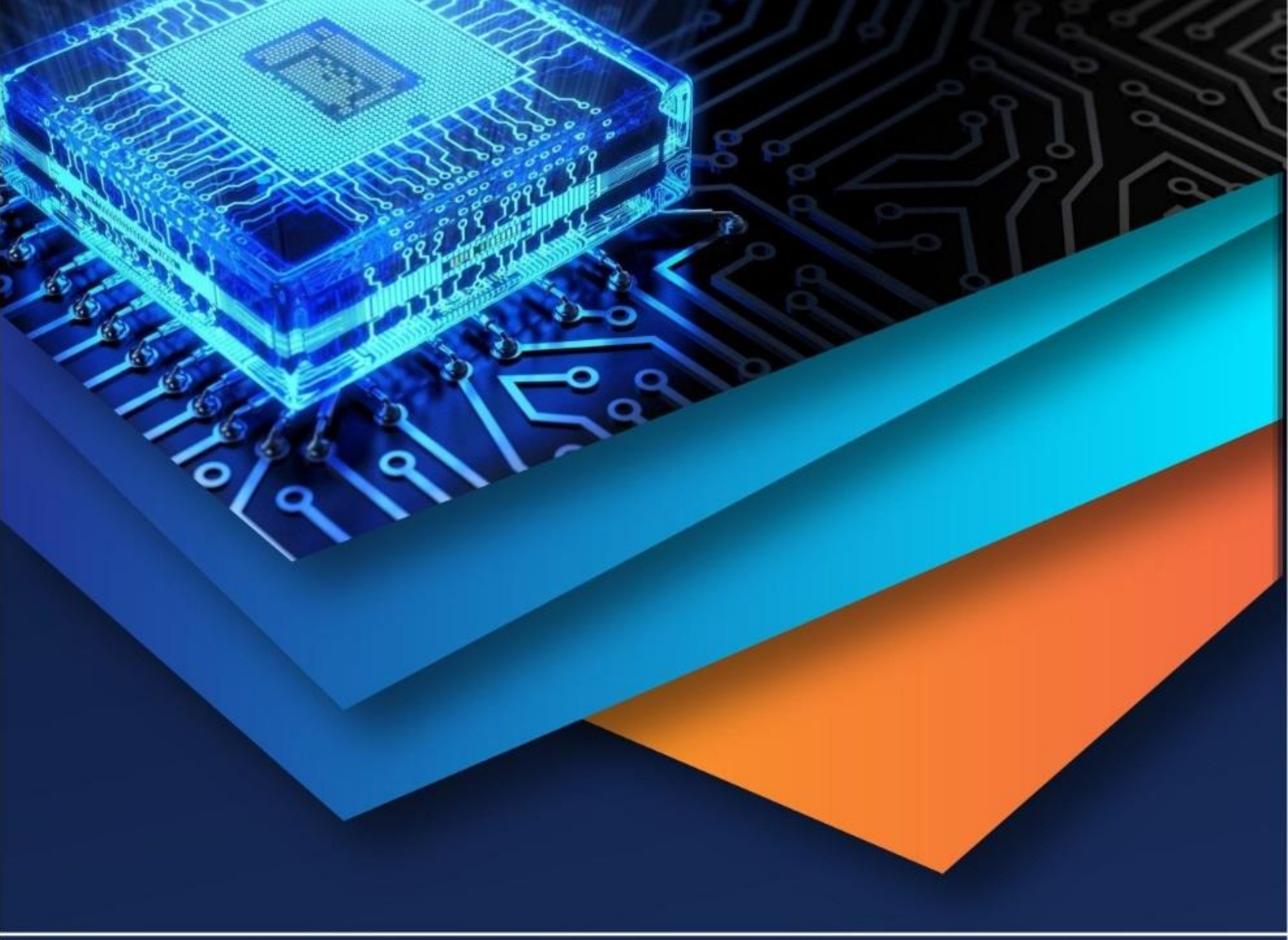

10.22214/IJRASET

45.98

IMPACT FACTOR: 7.129

IMPACT FACTOR: 7.429

INTERNATIONAL JOURNAL FOR RESEARCH

IN APPLIED SCIENCE & ENGINEERING TECHNOLOGY