iJRASET
International Journal For Research in Applied Science and Engineering Technology



INTERNATIONAL JOURNAL FOR RESEARCH

IN APPLIED SCIENCE & ENGINEERING TECHNOLOGY

Volume: 14 **Issue:** XI **Month of publication:** November 2026

DOI: https://doi.org/10.22214/ijraset.2026.85074

www.ijraset.com

Call: 08813907089 | E-mail ID: ijraset@gmail.com

International Journal for Research in Applied Science & Engineering Technology (IJRASET)
ISSN: 2321-9653; IC Value: 45.98; SJ Impact Factor: 7.538
Volume 14 Issue XI Nov 2026- Available at www.ijraset.com

Design and Analysis of a Disc and Pad of Disc Brake of an Automobile by Using Different Combination of Materials

Prasad Satish Divekar[1], Dr. Thippeswamy Ekbote[2]
[1] *Student, Mechanical Engineering Dept, B.I.E.T College, Davangere-577004 Karnataka, INDIA*
[2]*Associate Professor and PG Co-Ordinator, Mechanical Engineering Dept., B.I.E.TCollege, Davangere-577004 Karnataka, INDIA*

Abstract: ***In the present system of brake system where in disc and brake pad which are a vital parts and more or less to say that are life line in four wheeler vehicle and therefore these are to be maintained in good condition to avoid brake failure situation therefore system need to be maintain more efficiently. Using Catia- V5 & Ansys software the project is validated. The project is focused on strength hardness & durability of lifesaving equipment. Different combination of materials focused by using both static and fatigue analysis were worked out with theoretical and ansys result.***
Keywords: Disc Brake, Static Analysis, Fatigue Analysis.

I. INTRODUCTION

Slowing down the speed or stopping of the vehicle by means of brake, which is one of the vital part, provided in the vehicle to avoid any causalities or accidents and to make human life more safe and therefore breaking system should be properly placed and to make wheel safe, without any jerks whenever driver of the vehicle applies the brakes. There are two main types of brakes called disc brake and drum brake out of these two brakes disc brake have been chosen for detailed study in this project.

Disc brakes are now widely used in the automobile industries. This brake consists of disc, brake pads, brake pedal rotor, master cylinder and caliper. In this project, disc and brake pads have been focused and its structural and its thermal effects acts on different combination of materials that used for disc and disc brake rotor disc. We know that when two things comes in touch with friction an amount of energy is generated resulting in heat will be at high at the points of contacts and its effect is a dilation in increase in the field of pressure when bodies comes in contact with each other the tangential constraint and sliding speed becomes significant and these effect or impact are converted in the zones formed located at high thermal gradient in hot point mechanical and thermal deformation, stress concentration will normally generate cracks, vibrations.

Friction in a brake generate heats which causes deformation & vibrations and therefore all automobile industries there vital components requires thermal and mechanical tests.

Hurang and Wnsays ventilated temperature and thermal stress during single brake. In this multi body techniques are explained. Driver applies brakes to reduce or to stop vehicle (four-wheeler) kinetic energy generated by vehicle, which is converted into heat energy.

A. Merits of Disc Brake

- Brake torque is lessened to stop the vehicle compared to other types of brake system.
- Heat generation is reduced and easy to maintain.
- Safe in hard breaking condition and brake pad wear indicator provided.

II. OBJECTIVES

The project relates to the heat generated during breaking prediction of the thermal Increase, the consequences from increased temperature of components and its increases cycling of temperatures and how the thermal energy be handled from a design.

The internal temperature of the brake disc can be quickly increased even for relatively small amounts of brake usage.

To overcome this issue with long computational times a sequentially coupled approach has been adapted in this type of work thermal and mechanical analyses are performed sequentially.

©IJRASET: All Rights are Reserved

ISSN: 2321-9653; IC Value: 45.98; SJ Impact Factor: 7.538
Volume 14 Issue XI Nov 2026- Available at www.ijraset.com

III. DISC INTRODUCTION

To start with one side friction track fitted on rim and the inner side that is another side it is placed on the side of the axle and bowl as shown in the figure. This complete unit such as rim, axle ring and bowl are fixed in the hub.

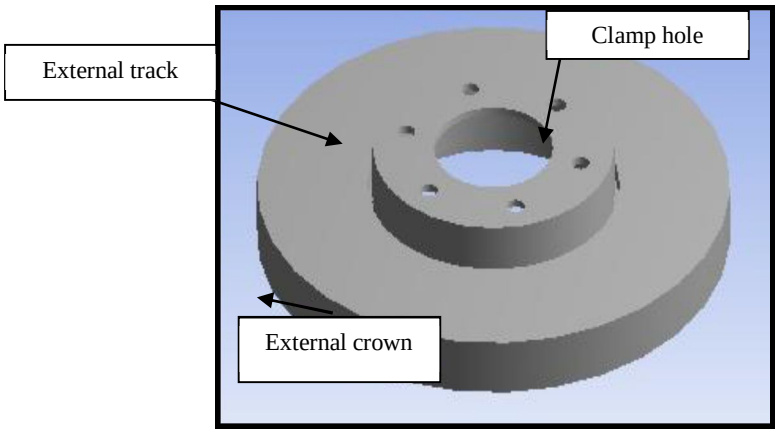

Figure 1: Brake disc

In the above said area bowl is fitted and as a result disc placed tends to come due to expansion cone suffers dilation in hot track and in the system the displacement is retained due to bowl presence which is less hot and that leads to stress concentration in the area cracks appeared on external or internal side of the disc in dynamometric bench test which is propagated and may result in crack of bowl.

A. Disc brake (Two types)

One type of disc brake is full disc and another is ventilated disc. It is fitted into the hub and the disc with the bowl in four-wheeler vehicle.

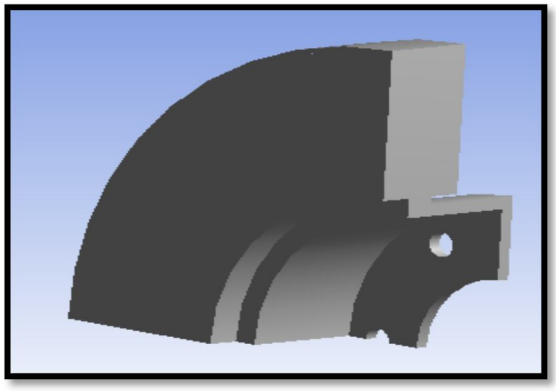

Figure 2: Full disc

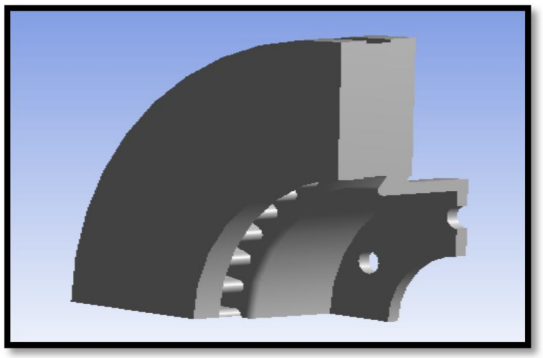

Figure 3: Ventilated disc

©IJRASET: All Rights are Reserved | SJ Impact Factor 7.538 | ISRA Journal Impact Factor 7.894 |

B. Principles of Disc Brake

Universally, it is fact that when the vehicle is in running condition or set in motion kinetic energy is generated which depends on velocity and mass, the system shows a friction force and it opposes rotational force due to the fact that vehicle wheel inertia exists .This hydro mechanical system is used by the operator to control speed and avoid accidents therefore as earlier said brakes and pads form important parts of the vehicle.

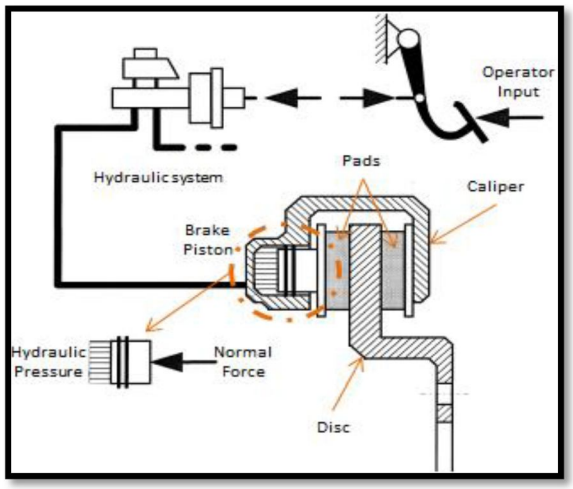

Figure 4: Simplified schematic of disc brake system

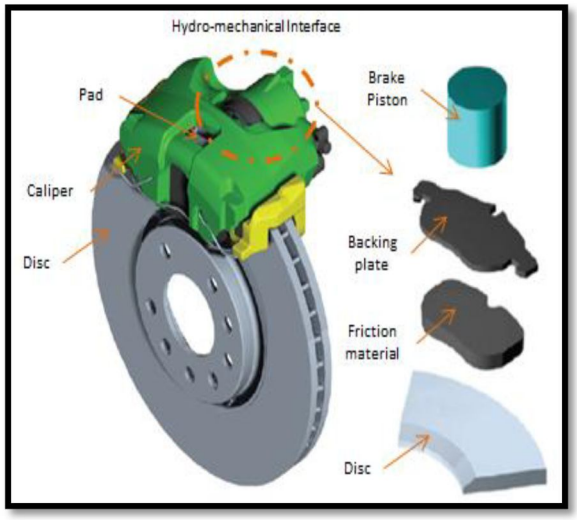

Figure 5: Cad Model

C. Problem Statement

To overcome certain problems in the disc, pad etc where temperature variation do not make it possible to be homogenized .It is the fact that when the thermal gradient is at high level the thickness of friction track affects also the circular area direction. The heat flux transfers into disc and brake pad known to be as hot spot and due to this reason temperature of disc undergoes deformation (viscoplastic).

Thermo- mechanical fields with numerical prediction are established and implemented with the help of fundamental calculations and coupling between different phenomena.

Variation in thermal/temperature arises due to friction between disc and pad, which leads to conduction, convection; radiation affects the temperature level ranges from 20°C to 700°C in fraction of seconds.

IV. METHODOLOGY

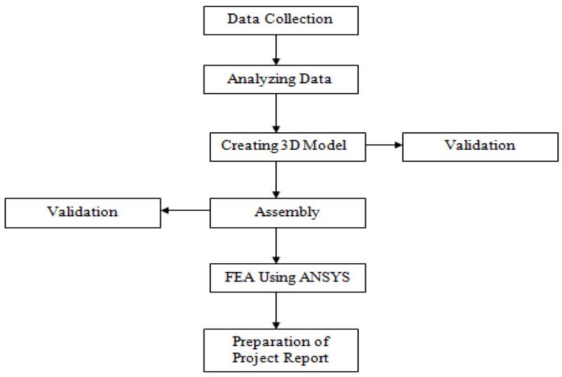

Figure 6: Methodology Flowchart

A. *Description about Flowchart*

We know that when the vehicle is set in motion more safety measures are to be adopted to save the life of human beings. Because of this reasons the disc brake and brake pad which are the vital parts of the vehicle have been chosen in the project is focused on its braking capabilities etc. Mainly the criteria such as price system compatibilities light weight in commercial vehicle has been considered, two stages are involved are design and performance evaluation carried out to meet the above criteria. There are different materials with different properties like carbon ceramics used in disc brake rotor which have good wear resistance high thermal conductivity cost effective compared to the other materials. The project is also highlighted on above conditions. It is also noticed that aluminum alloy metal matrix having maximum operating temperature which limits its application.

Approximately the weight of the vehicle is 2000 Kgs have been considered and using the coordinate Measurement Machine (CMM) equipment the performance is calculated.

It is also used the connected software such as Ansys,CatiaFinite Element Method to determine performance load analysis heat flux heat transfer coefficient during its operation thermal analysis results obtained and validated.

The above performance analysis wear repeated and the best one can be installed in the four-wheel vehicle.

V. EXPERIMENTAL SETUP

A analysis is required to be carried out to measure desired forces in a disc and brake pad.The experiment are subjected to extensive test.Its optimum arrangement of all parts (vital) operational efficiency and best performance must be met and therefore to achieve this pistons (TWO), calipers, framework etc are considered prominently as these are extensively used in the vehicle brake disc. The force lines of clamping and tangential force are presented.

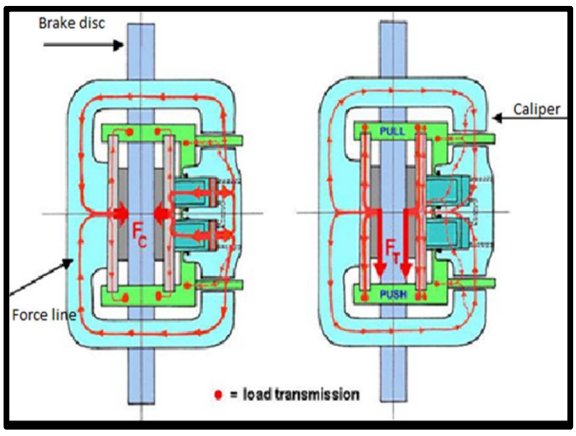

Figure 7: Force lines in caliper

ISSN: 2321-9653; IC Value: 45.98; SJ Impact Factor: 7.538
Volume 14 Issue XI Nov 2026- Available at www.ijraset.com

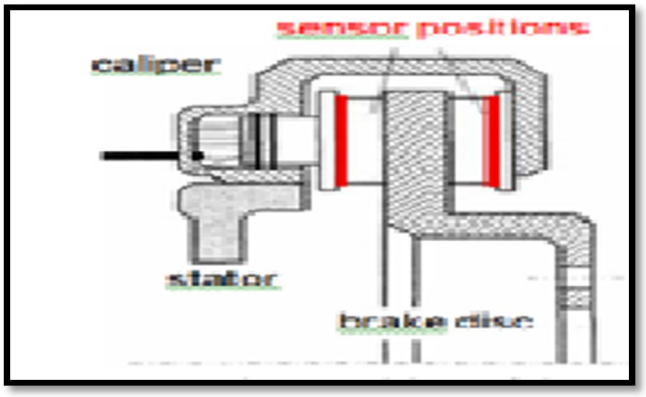

Figure 8: Measuring position of the sensors for registration of the clamping force

The above indicates that out of the two clamping force one part flows over piston finger and the other part over the stator. Force measurement in this friction material Fig. before force pressure is injected into the back plate. This portion of the force cannot be measurement at this level because of the fact it correspondent to the concept that piston and clamping force are not equivalent. Latest technologies adopted in sensors and are used to transmit the force where the vehicle is in normal speed of 40 km. required space building in a brake pad and its use in calipers. Semi statically and dynamical measurement of temperature dependency can be compared by using strain gauges (Pic-30 and use of Piegn electrical with the help of sensors technology like Piezo quartz sensor of KistlerTyre company. Measurements for the temperature should be sufficient building height. Its stiffness/strength which should correspondence to back plate pads of steel. Brake pads are fastened or clamped to the back plate which withstands up to 300 degrees c approx. after the entire process is completed. Air cooling breaking test benches are available and is sufficient to keep the sensors at lower level of temperature in the field of application between the back plate and support plate.

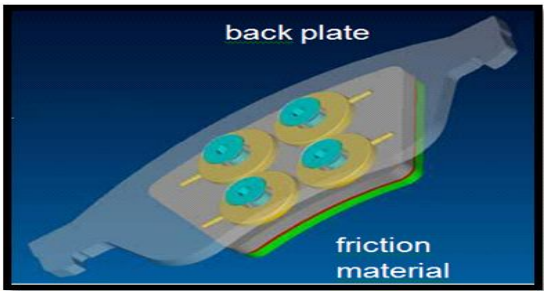

Figure 9: Cad model of the piezo prototype



Figure 10: Position of the piezo quartz sensors

The above indicates that sensors on adopter plate (Back plate is not shown) is measured when the force is aggregated or consolidated at signal point of application (four singles) load can be proved with the help of compression test of brake plate (fig) Pad at maximum pressure testing ranges up to 160 bar, 300mm (with original piston surface) it results will ranges between 11 and 19.

©IJRASET: All Rights are Reserved | SJ Impact Factor 7.538 | ISRA Journal Impact Factor 7.894 |

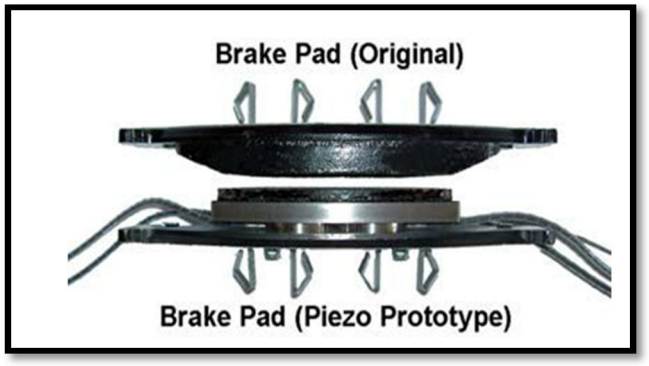

Figure 11: Original brake pad and piezo prototype

A. Calibration

Piezo proto type calibration is carried out as this operates in two direction simultaneously, Construction force can be applied both statically and dynamically where defined forces flow occurs with the help of balls.



Figure 12: Calibration station of the piezo prototype

B. Test set up and test parameter

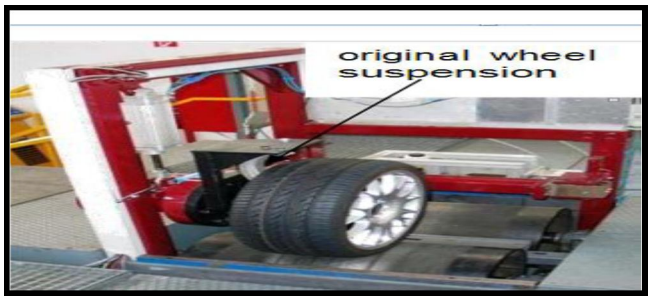

Figure 13: Test execution on FZD roll test rig

An execution of this test is done by fitting brake pads into the caliper Fig. Centrifugal force test bench as well as chairs own test bench and on this subject researches are carried out 9TMD friction Ltd.



Figure 14: Brake pads with integrated piezo quartz sensors assembled in the caliper

©IJRASET: All Rights are Reserved | SJ Impact Factor 7.538 | ISRA Journal Impact Factor 7.894 |

ISSN: 2321-9653; IC Value: 45.98; SJ Impact Factor: 7.538
Volume 14 Issue XI Nov 2026- Available at www.ijraset.com

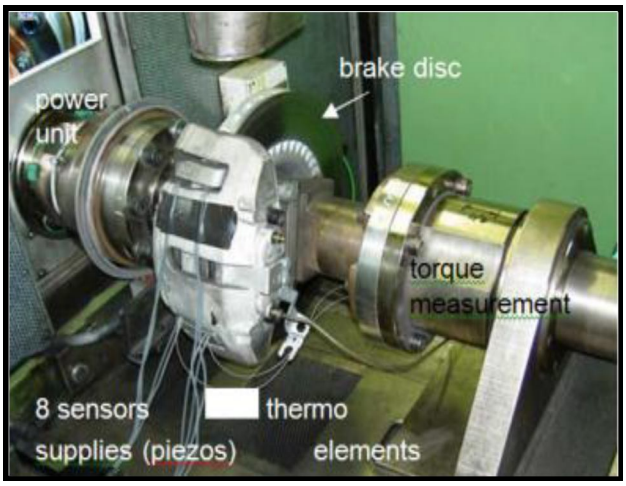

Figure 15: TE test execution on tmd brake test rig

Centrifugal test bench which is widely used with help of roll test bench along with wheel and calipers when in motion (FIG) Sensors(piezo quartz) wiring are led between the gap of stator and calipers frame, charge amplifier and because of its advantages various parameters required such as sensors, temperature, brake, pressure, speed, breaking torque are measured and recorded. This process is repeated to arrive to the best decision before it is finally installed the test parameters are as under.

- Brake pressure: 0-60 bars and if it is less than 60 bars it may sometimes block the wheel
- Wheel speed: 0 mls(stationary wheel) and braking ranges from 15 and 30 mts
- The temperature of brake disc at the time of braking >100 degree C this will protect the sensors.

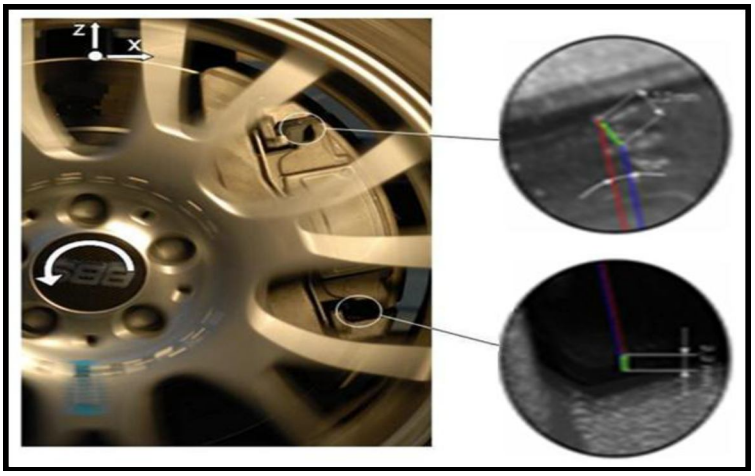

Figure 16: Movement of a brake pad during brake with 40 bar

Movement of brake disc with the centre of the wheel is taken the point of radius of the vehicle, brake design, movement of calipers and on the other side movement of brake pad and this whole process of movements are calculated and it is necessary to develop this system of measurement. There is another method called Visual measurement which is of high precision by using high resolution of the ranges 10.2 millions pixel correspondence to 0.124 mm.

Brake pad rotates as expected and therefore screws out intake sides corresponds to acting forces and that movement of sensors will be insignificantly in the direction of the wheel centre.

Measurement/calculations at load points of pads, back plate is necessary in other works it can be said that the deviation will be 0.66 mm approx and this will be added to the measurement value.

It can be greater or more than and will be different for different types of calipers as the construction of frame brakes related to its strong's strength/stiffer than simple finger brakes.

©IJRASET: All Rights are Reserved

VI. STATIC ANALYSIS RESULTS OF GRAY CAST IRON AS DISC WITH ASBESTOS PAD

A. Total deformation

The total deformation of gray cast iron as disc with asbestos pad indicates a maximum deformation of 0.00029819 m at outer edge.

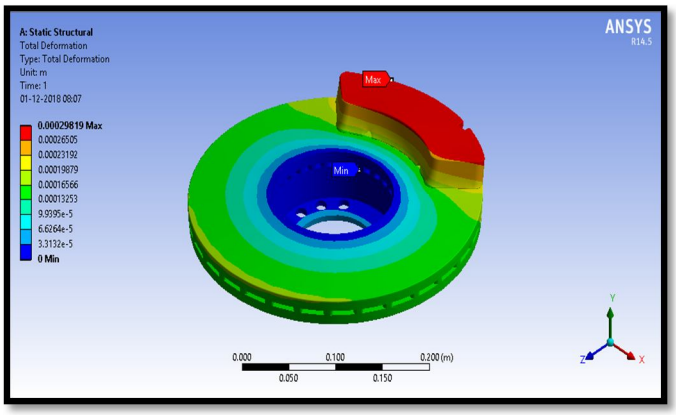

Figure 17: Total deformation of gray cast iron as disc with asbestos pad

B. Equivalent (Von-mises) stress

The equivalent (von-mises) stress of gray cast iron as disc with asbestos pad indicates stress of 4285.9 Pa at inner edge.

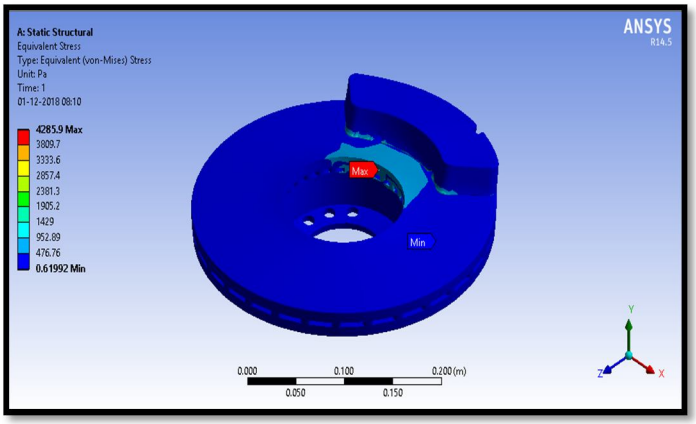

Figure 18: Equivalent (von-mises) stress of gray cast iron as disc with asbestos pad

VII. FATIGUE ANALYSIS RESULTS OF GRAY CAST IRON AS DISC WITH ASBESTOS PAD

A. Total deformation

The total deformation of gray cast iron as disc with asbestos pad indicates maximum deformation of 1.7451x10^-10 m at outer edge.

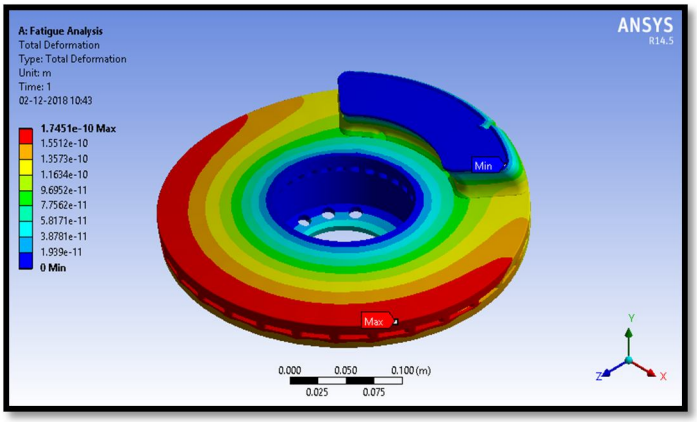

Figure 19: Total deformation of gray cast iron as disc with asbestos pad

B. Equivalent (Von-mises) stress

The equivalent (von-mises) stress of gray cast iron as disc with asbestos pad indicates stress of 482.93 Pa at inner edge.

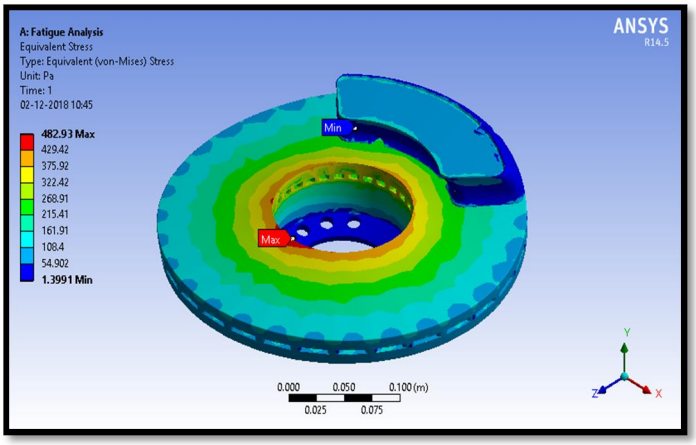

Figure 20: Equivalent (von-mises) stress of gray cast iron as disc with asbestos pad

VIII. STATIC ANALYSIS RESULTS OF STAINLESS STEEL AS DISC WITH CARBON FIBRE PAD COMBINATION

A. Total deformation

The total deformation of stainless steel as disc with carbon fibre pad indicates a maximum deformation of 1.05x10-10 m at outer edge.

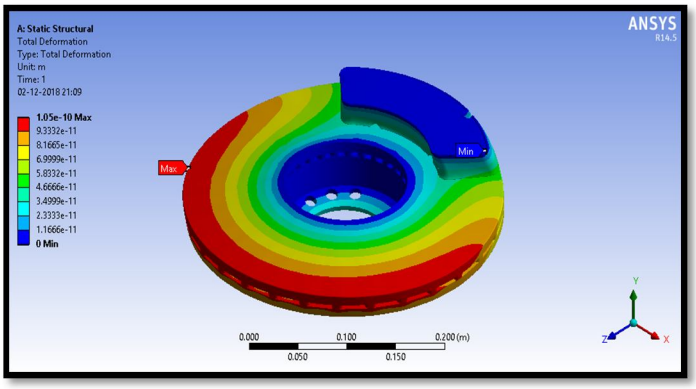

Figure 21: Total deformation of stainless steel as disc with carbon fibre pad

B. Equivalent (Von-mises) stress

The equivalent (von mises) stress of stainless steel as disc with carbon fibre pad indicates a maximum stress of 1605.1 Pa at outer edge.

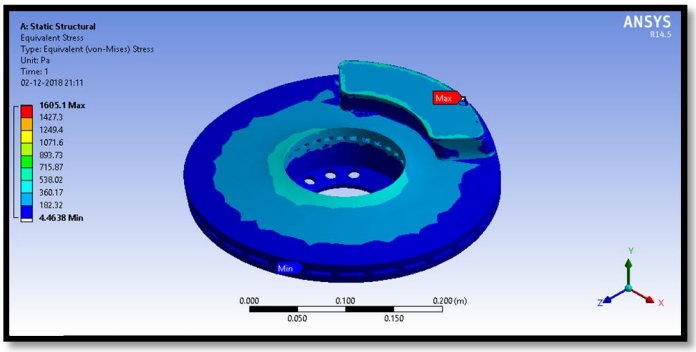

Figure 22: Equivalent (von-mises) stress of stainless steel as disc with carbon fibre pad

IX. FATIGUE ANALYSIS RESULTS OF STAINLESS STEEL AS DISC WITH CARBON FIBRE PAD

A. Total deformation

The total deformation of stainless steel as disc with carbon fibre pad indicates total deformation 1.0562x10-10 m at outer edge.

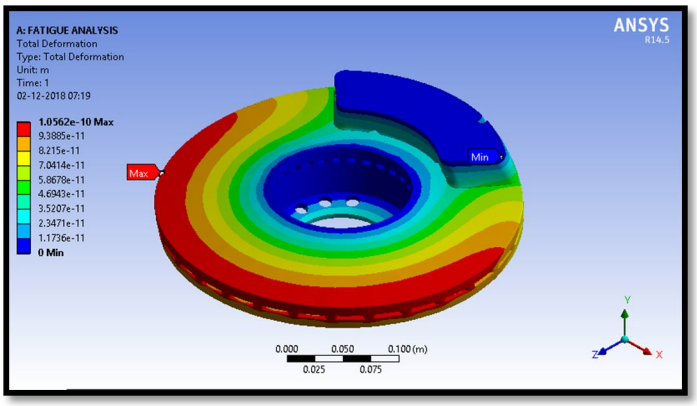

Figure 23: Total deformation of stainless steel as disc with carbon fibre pad

B. Equivalent (Von -mises) stress

The equivalent (von-mises) stress of stainless steel as disc with carbon fibre pad indicates stress of 588.61 Pa near inner edge.

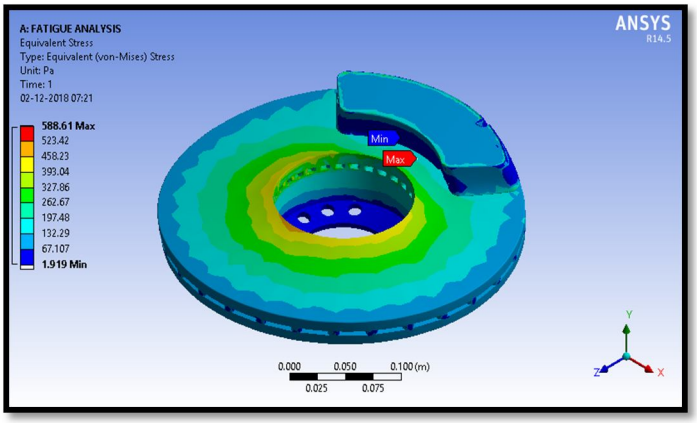

Figure 24: Equivalent (von-mises) stress of stainless steel as disc with carbon fibre pad

X. TABULATION FOR THE VARIOUS COMBINATION OF MATERIALS

Table 1: Static analysis of all three different combination

Type of materials	*Theoretical results*		*Ansys results*	
	Total deformation (mm)	*Von-mises stress (MPa)*	*Total Deformation (mm)*	*Von mises Stress (MPa)*
Gray cast iron	$9.13x10^{-3}$	$165x10^{-3}$	$1.7327x10^{-7}$	0.00049271
Stainless steel	$4.86x10^{-3}$	$120.8x10^{-3}$	$1.0335x10^{-7}$	0.00057685

ISSN: 2321-9653; IC Value: 45.98; SJ Impact Factor: 7.538
Volume 14 Issue XI Nov 2026- Available at www.ijraset.com

Table 2: Fatigue analysis of all three different combinations of Materials

Type of materials	*Theoretical results*		*Ansys results*	
	Total Deformation (mm)	*Von-mises stress (MPa)*	*Total Deformation (mm)*	*Von mises Stress (MPa)*
Gray cast iron	$9.13x10^{-3}$	$165x10^{-3}$	$1.7325x10^{-7}$	0.00049473
Stainless steel	$4.86x10^{-3}$	$120.8x10^{-3}$	$1.0308x10^{-7}$	0.00051396

C. Static results of gray cast iron as disc with asbestos and carbon fibre pad

Table 3: Static results of gray cast iron as disc with asbestos and carbon fibre pad

Type of pad materials	*Theoretical results*		*Ansys results*	
	Total deformation (mm)	*Von-mises stress (Mpa)*	*Total deformation (mm)*	*Von-mises stress (Mpa)*
Asbestos	$6.68x10^{4}$	447.82	0.29819	0.0042859
Carbon Fibre	0.269	1.049	0.0014276	17.326

D. Fatigue results of gray cast iron as disc with asbestos and carbon fibre pad

Table 4: Fatigue results of gray cast iron as disc with asbestos and carbon fibre pad

Type of pad materials	*Theoretical results*		*Ansys results*	
	Total deformation (mm)	*Von-Mises Stress (Mpa)*	*Total deformation (mm)*	*Von-Mises Stress (Mpa)*
Asbestos	$6.68x10^{4}$	447.82	$1.7451x10^{-7}$	0.00048293
Carbon Fibre	0.269	1.049	$1.7797x10^{-7}$	0.00072947

E. Static results of stainless steel disc with asbestos and carbon fibre pad

Table 5: Static results of gray cast iron as disc with asbestos and carbon fibre.

Type of pad materials	*Theoretical results*		*Ansys results*	
	Total deformation (mm)	*Von-mises stress (Mpa)*	*Total deformation (mm)*	*Von-mises stress (Mpa)*
Asbestos	$6.68x10^{4}$	447.78	0.6415	0.058117
Carbon Fibre	0.260	1.004	$1.05x10^{-7}$	0.0016051

©IJRASET: All Rights are Reserved

F. Fatigue results of stainless steel as disc with asbestos and carbon fibre pad

Table 6: Fatigue results of stainless steel as disc with asbestos and carbon fibre pad

Type of pad materials	*Theoretical results*		*Ansys results*	
	Total deformation (mm)	*Von-Mises stress (Mpa)*	*Total deformation (mm)*	*Von-Mises stress (Mpa)*
Asbestos	$6.68x10^{4}$	447.78	$1.0343x10^{-7}$	0.00050305
Carbon Fibre	0.260	1.004	$1.0562x10^{-7}$	0.00058861

XI. RESULTS

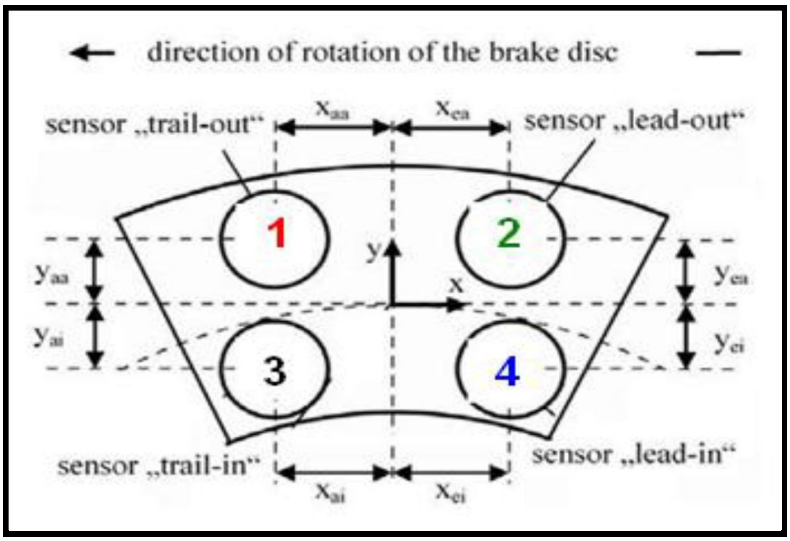

Figure 25: Indication of sensors in the brake pad

The process of application of methods will indicates highest stresses from the contact pressure broad brake disc with radial cavities made of cast iron and are resistance to heat.

Figure shows the position of piston brake pads at breaking pressure of 40 bars and stationary brake Fig indicates the initial speed of 15 mls (425rmp).

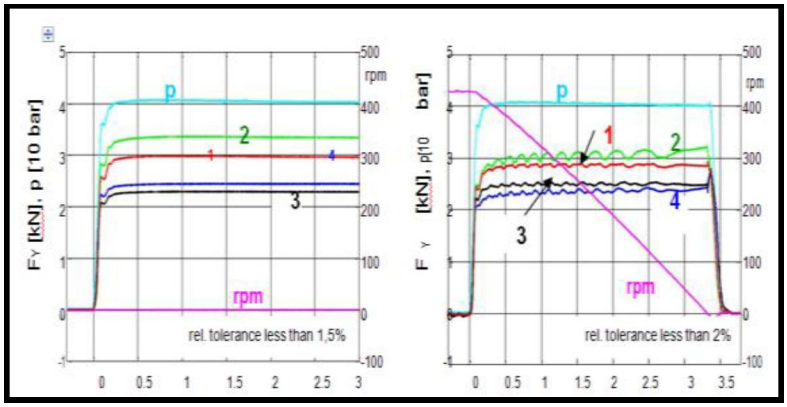

Figure 26: Course of the normal forces of the single sensors of piston sided pad

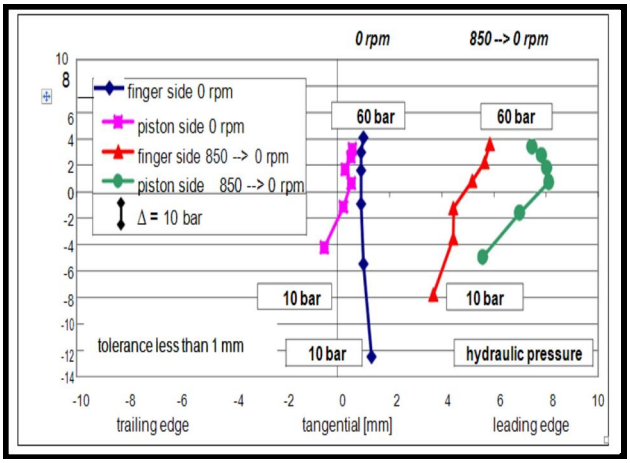

Figure 27: Course of the normal forces of the single sensors of the piston sided pad.

With the above procedure data, it can be inferred that sensors transfer the greater the forces and its increase at breaking pressure point correspondence to model concept of expansion of calipers at high level of pressure.

We can say from the above that at the load point it moves by 7 mm piston sided to the outside by stationary disc brake when the pressure ranges from 10 to 60 bars and the effort of finger sided is 17 mm approx is higher/greater.

To sum up that the design of brake, piston sided suspension should be strong enough/ stiffer as all these are connected In this process the load application points shifts to the direction of loading edge.

XII. CONCLUSION

In the present project of brake system where in disc and brake pad which are a vital equipment is a life saving in four wheeler vehicle therefore this is to be maintain this in good condition to avoid brake failure situation apart from this advantages & disadvantages of the system we need to maintain more efficiently. Using Catia- V5 software & Ansys the project was validated. The project was focused on strength hardness & durability as this are the life saving equipment. Different combination of materials were used and both static and fatigue analysis were worked out with theoretical and ansys result.

Earlier a combination of gray cast iron disc with asbestos pad was present and an analysis was made on the improvement using the combination of stainless steel rotor disc and carbon fibre pad.

The criteria such as strength hardness and durability (life span) which was focused in project as substantially improved using the above combination it means to say that the life span which was 6 years earlier where disc and brake pad are to be replaced was enhanced to 10 years so therefore the above combination though costly it becomes a cost effective method when we focused on the lifespan and the above criteria.

Different combination were also considered brake pad and analyzed to sum up it can be suggested that the above improvement with the theoretical and experimental validation the improvement can be implemented.

XIII. FUTURE WORK

Combination of different materials available in the periodical tables. Fig can be made use to withstand the thermal heat, light mass, low cost and properties of materials which are also eco-friendly for the brake disc and pad. One of the most important properties should be seen is the density as normally providing energy as stated in young's modulus. Actual heat used asymmetric aspects which is alternative to the above is to be analysed and can be implemented in future.E-glass combination can also be experimented.

REFERENCES

[1] AdriaanNeys, Halmers University of Technology, Thesis in the Master's programme in Automotive Engineering, 2012, Report No. 2012:38.
[2] Abd Rahim Abu-Bakar, HuajiangOuyang, Prediction of Disc Brake Contact Pressure Distributions by Finite Element Analysis, JurnalTeknologi, 43(A) Dis. 2005, PP 21–36.
[3] Abd Rahim Abu-Bakar, HuajiangOuyang, Recent Studies of Car Disc Brake Squeal, In: New Research on Acoustics ISBN 978-1-60456-403-7 , pp.159-198.
[4] Ali Belhocine, MostefaBouchetara, Investigation of temperature and thermal stress in ventilated disc brake based on 3D thermo mechanical coupling model, Department of Mechanical Engineering, USTO Oran University, L.P 1505 El- Mnaouer, 17 August 2012, PP 475–483.

[5] BanakarPrashanth&Shivananda H.K., Preparation and Characterization of the Carbon Fibre Reinforced Epoxy Resin Composites, IOSR Journal of Mechanical and Civil Engineering (IOSRJMCE), May-June 2012, PP 15-18.
[6] ChavanPrashant, ApteAmol, Axisymmetric analysis of bolted disc brake assembly to evaluate thermal stresses TATA motors ltd. Pimpri, Pune411018. India 91-20-5613 3159.
[7] Cao1 Q, Friswell M I, Ouyang H, J E Mottershead1 and S James, Car Disc Brake Squeal:Theoretical and Experimental Study Materials Science Forum Vols. 440-441 (2003) pp. 269-276 .
[8] FaramarzTalati& Salman Jalalifar, Analysis of heat conduction in a disk brake system, Heat Mass Transfer, 2009, 45:1047–1059.
[9] Goutham Kumar Reddy Challa, Abhinoy Krishna Guduru, Siddhartha Patlori and Dr.M.Madhavi, Design and Analysis of Carbon Fibre / Epoxy Resin Brake Rotor, IOSR Journal of Mechanical and Civil Engineering (IOSR-JMCE), Jul. - Aug. 2015, PP 23-28.
[10] Hao Xing, Squeal Analysis of Disc Brake System, Beijing FEA online Engineering Co.,Ltd. Beijing, China, 4th ANSA & µ ETA International Conference.

AUTHORS PROFILE



Mr.Prasad Satish Divekar , M. Tech (Machine Design) From Bapuji College Of Engineering And Technology Davanagere Under Visvesvaraya TechnologicalUniversity,Belagavi,Karnataka,India.

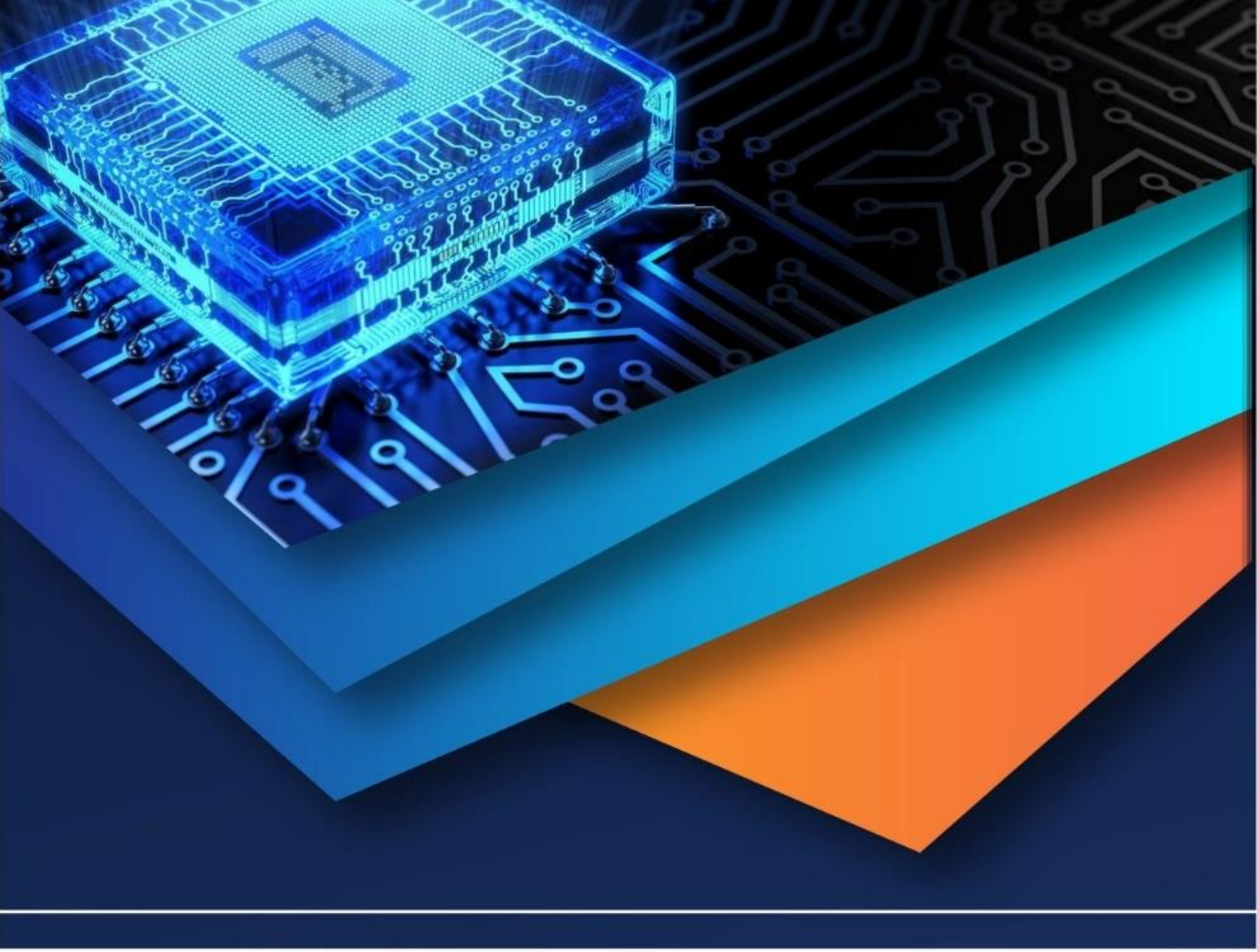

10.22214/IJRASET

45.98

IMPACT FACTOR: 7.129

IMPACT FACTOR: 7.429

INTERNATIONAL JOURNAL FOR RESEARCH

IN APPLIED SCIENCE & ENGINEERING TECHNOLOGY

Call : 08813907089 (24*7 Support on Whatsapp)