iJRASET
International Journal For Research in Applied Science and Engineering Technology



INTERNATIONAL JOURNAL FOR RESEARCH

IN APPLIED SCIENCE & ENGINEERING TECHNOLOGY

Volume: 11 **Issue:** V **Month of publication:** May 2023

DOI: https://doi.org/10.22214/ijraset.2023.53387

www.ijraset.com

Call: 08813907089 | E-mail ID: ijraset@gmail.com

International Journal for Research in Applied Science & Engineering Technology (IJRASET)
ISSN: 2321-9653; IC Value: 45.98; SJ Impact Factor: 7.538
Volume 11 Issue V May 2023- Available at www.ijraset.com

Fabrication For Forarm Energy Generation

Nimesh Balpande[1], Amit Motghare[2], Lokesh Ghule[3], Madhur Shende[4], Prof. Sandesh Gotekar
[1, 2, 3, 4, 5]*Department of Mechanical Engineering, Vidharbha Institute of Tech, Nagpur*

***Abstract:** In recent years, an increasing concern of environmental issues of emissions, in particular global warming and the limitations of energy resources has result din extensive research into novel technologies of generating electrical power. Generating electricity in present there is a shortage of fossil fuel, oil, gas, etc. burning of these fuels causes environmental problem like radio activity pollution, global warming etc. So that these (coal, oil, gas) are the limiting resources hence resulting new technology is needed for electricity generation, by using thermoelectric generators to generate power as almost promising technology and environmental free and several advantages in production.*

I. INTRODUCTION

Energy neither be created nor be destroyed but can be converted from one form of energy to another. Energy is everywhere and drives everything. Today's modern life has become more dependent on energy and there is no limit to utilizing it. We have used energy at an increasing rate ever since we have come on this earth a few million years ago. We have come a far way without realizing how much energy we have wasted. In this modern life, we have many electronic gadgets and even vehicles that run on electric power. The following document outlines an investigation of the benefits of implementing a human-powered energy harvesting system that will be housed within a gym and used to offset the gym's requirements. The energy harvesting system in this project will be based on a rack and pinion mechanism by converting vertical motion into rotational motion. The pinion attached to the shaft rotates the alternator which generates electric power. the rack attached at the bottom moves down the reciprocating motion is converted into the rotary motion with a certain RPM. The alternator connected to the pinion will generate electric power. The great outdoor gym (TGO) company in the United Kingdom has been producing energy-generating gymnasium equipment for cardio charge and lightning

1) World net electricity generation increased by 45%, rising from 23.4 trillion kilowatt-hours (kWh) in 2015 to 30.4 trillion kWh in 2040
2) The proposed forearm gym equipment will produce energy from the moving parts of the gymnasium machinery increasing the potential of renewable energy sources. Due to the development of modern technology,

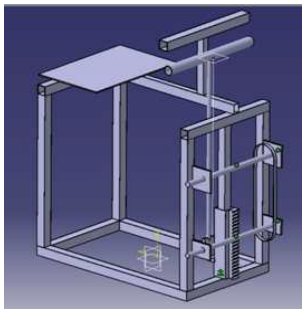

II. OBJECTIVES

To know some details about the energy crisis in world at current situation

1) To understand what is Energy Harvesting and the need for it: also, the sources of energy harvesting
2) To understand in detail the Human Power Energy Harvesting.
3) To analyse the power consumption in a regular gym.
4) Analyse the concept of Green Gym and survey on the existing equipment which harness the Human Power into useful electrical energy , Implementation of the pneumatic technology.
5) Modified the existing mechanisms.
6) To make use of pneumatic system were working fluid is readily available
7) To prepare and efficient and cost effective system

©IJRASET: All Rights are Reserved

III. SCOPE OF WORK

Our Project helps to generate power using human efforts, which doesn't cost any money. This Project reduces the use of Natural resources to generate power and control the pollution caused by them. Global electricity demand is growing faster than renewable, driving a strong increase in generation from fossil fuels. Coal-fired electricity generation is set to increase by 7% this year and 2% more in 2023. Our project helps to meet these demands for a smaller range, for now, the main objective of this project is to implement it on large scale. This project is cost-efficient and can be built with minimum components.

This system can generate more power, only if the upcoming generation makes use of this mechanism and improve it further to increase the efficiency of the power-generating gymnasium equipment

A. Problem Statment

The main aim of this project is to generate power by humans while hitting the gymnasium equipment in the gym. We are using forearm gym equipment to achieve this. In addition to the equipment, there will be a rack and pinion, battery, alternator, and spring to complete the project

The main sources of energy that we are using is from fossil fuels. But these are finite and environmental costly. More usage of fossil fuels will increase the carbon dioxide level in the atmosphere. This will cause an imbalance in the atmosphere. Reducing the usage of fossil fuel will result in less global warming.

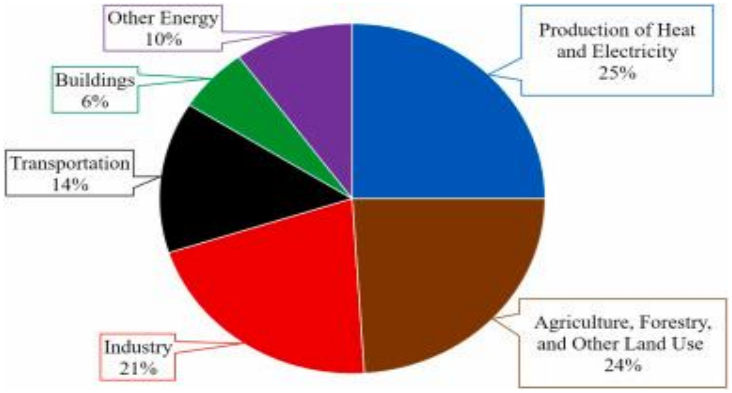

B. Our Innovation

Human work is converted into mechanical motion with the help of various mechanical parts. Then this mechanical motion is transferred to shaft and it convert into shaft motion the shaft is coupled with DC motor and DC motor is
coupled with battery to store electricity and drive from the battery when it needed

A rack and pinion is a type of linear actuator that comprises a circular gear (the pinion) engaging a linear gear (the rack), which operate to translate rotational motion into linear motion. Driving the pinion into rotation causes the rack to be driven linearly. Driving the rack linearly will cause the pinion to be driven into a rotation. A rack and pinion drive can use both straight and helical gears. Helical gears are preferred due to their quieter operation and higher load bearing capacity. The maximum force that can be transmitted in a rack and pinion mechanism is determined by the tooth pitch and the size of the pinion.

A gym powered electric generator provides a method of generating electricity by means of a modified stationary gym equipment for use in electrical energy 1 storage and running household or other appliances. Human/mechanical energy is converted into electrical by means of an electric generator that is connected to exercise equipment. As result the energy created by the generator can be stored in various types of lead-acid batteries which may then be tapped at a later time, after dark for example, when the energy is needed to power lights or else. If AC appliances are in place, then an inverter must be used to transfer the DC current into the standard 230 volts of AC current for usage by these appliances.

We hereby make use of an energy harvester system that moves in response to movement of the motion of a gym exercise machine for converting kinetic energy of the exercise equipment into electrical power. Our system makes use of the gripping rod connected to spring based motorized mechanism having rack pinion arrangement and multiple motors to power the system and generate power. The system aims to provide resistance to exercise movement while generating power from the same thus serving dual purpose. The machine makes use of 1-3 motor arrangement to provide 3 levels of generation capability. The machine aims to generate electricity through horizontal motion created while workout. The spring based mechanism

©IJRASET: All Rights are Reserved | SJ Impact Factor 7.538 | ISRA Journal Impact Factor 7.894 |

C. Fabrication Process

1) Fabrication of the frame structure,
2) Fabrication of the pillow block bearings to the frame,
3) mounting the wheels on the axle by interference fit,
4) Mounting and aligning the crown wheel to the rear axle centre,
5) Inserting the axle through the pillow block bearing hubs,
6) Aligning and fabricating the pinion to the crown wheel,
7) Mounting the cutters and sprockets over the hub,
8) Placing and aligning the chain over rear and front sprockets,
9) Fabricating the handle to the frame

D. Rack And Pinion

Rack And Pinion: A rack and pinion gear that comprises a circular gear (the pinion) meshes to the linear gear (the rack), which operates to translate linear motion into rotational motion. Both helical and straight gears can be used in the gear drive

A rack and pinion is a type of linear actuator that comprises a pair of gears which convert rotational motion into linear motion. The circular pinion engages teeth on a linear "gear" bar–the rack. Rotational motion applied to the pinion will cause the rack to move to the side, up to the limit of its travel. For example, in a rack railway, the rotation of a pinion mounted on a locomotive or a railcar engages a rack between the rails and pulls a train along a steep slope.

The rack and pinion arrangement is commonly found in the steering mechanism of cars or other wheeled, steered vehicles. This arrangement provides a lesser mechanical advantage than other mechanisms such as recirculating ball, but much less backlash and greater feedback, or steering "feel". The use of a variable rack (still using a normal pinion) was invented by Arthur E Bishop, so as to improve vehicle response and steering "feel" especially at high speeds, and that has been fitted to many new vehicles, after he created a specialized version of a net-shape warm press forging process to manufacture the racks to their final form

E. DC Motor (DYNAMO)

A DC motor is any of a class of electrical machines that converts direct current electrical power into mechanical power. The most common types rely on the forces produced by magnetic fields. Nearly all types of DC motors have some internal mechanism, either electromechanical or electronic; to periodically change the direction of current flow in part of the motor. Most types produce rotary motion; a linear motor directly produces force and motion in a straight line.

DC motors were the first type widely used, since they could be powered from existing direct-current lighting power distribution systems. A DC motor's speed can be controlled over a wide range, using either a variable supply voltage or by changing the strength of current in its field windings. Small DC motors are used in tools, toys, and appliances. The universal motor can operate on direct current but is a lightweight motor used for portable power tools and appliances. Larger DC motors are used in propulsion of electric vehicles, elevator and hoists, or in drives for steel rolling mills. The advent of power electronics has made replacement of DC motors with AC motors possible in many applications.

IV. INSPECTION METHOD

As increasing demand of energy, the alternative way can be useful in future. With design at large scale to fulfil the power demand of domestic as well commercial. The dependency on Non renewabl resources will be overcomes and reducing emissions of green house gases. In future, this method can be developed more and area of establishment are using it in series of system. As per our design we observed from prototype the power generate only in upward motion of float while the downward motion can not be utilised, so to utilise both motion of float we can solve this problem by designing the gearbox to produce continuous power with single generator. Also by placing two generator one can produce in upward motion &other one will produce energy in downward motion. This can be alternative way to fulfil the energy demand and prevention again energy crisis. The Forearm Power Generating Gym Equipment is not a Primary source of energy, but rather can be used as a secondary source same as solar harvesting devices and this setup can be used in Private Gym, Public Gym, etc. In this method only the Pinion and Rack play a major role, thus the method is quite easy to maintain and implement. But to implement this project in gyms, more equipment in the gym should be designed and remodified to generate power. This project aims to show that this method is quite sufficient to generate enough power to charge small-scale devices.

©IJRASET: All Rights are Reserved | SJ Impact Factor 7.538 | ISRA Journal Impact Factor 7.894 |

V. METHODOLOGY

To start of this project, a meeting with guide in the first week is done to manage the schedule of weekly meetings. The purpose is to inform the guide on the progress of the project and guided by the guide to solve difficulty. Briefing based on the introduction and next task of the project is given by guide. Make research of literature review with the means of the internet, books, available published articles and materials that is related to the title.

Designing phase start of by sketching few model models using manual sketch on A4 papers. Do it comparison for choose the best concept. Software applications are downloaded from internet to design the model based on the sketches. Software Creo parametric 2.0 helps to draw the better dimension. The preparation of mid-presentation of the project is next. Before presenting, the guide will see through the slide presentations and comment on corrections to be made. Then, presentation on the knowledge attained and instilled in the design phase is presented to a panel of three judges. Following up, is the fabrication of make some method for this project. Choose the material, make some list for the material and dimension. Doing it planning of fabrication process for this project. After that, start the fabrication process. It would take seven weeks to get this design and fabrication process alteration done. Make some analysis and testing for the project. Do it correction for error this project. Finish the fabrication process with painting process. After that, the final report writing and final presentation will be the last task to be accomplished. The guide will review the final presentation and revise mistakes to be amended. The final presentation then again will be presented to three panels. A draft report would then be submitted to the guide to be point out the flaws. Corrections are done and the real final report is handed over as a completion of the final year project.

VI. CONCLUSION

As increasing demand of energy, the alternative way can be useful in future. With design at large scale to fulfil the power demand of domestic as well commercial. The dependency on Non renewable resources will be overcomes and reducing emissions of green house gases. In future, this method can be developed more and area of establishment are using it in series of system. As per our design we observed from prototype the power generate only in upward motion of float while the downward motion can not be utilised, so to utilise both motion of float we can solve this problem by designing the gearbox to produce continuous power with single generator. Also by placing two generator one can produce in upward motion &other one will produce energy in downward motion. This can be alternative way to fulfil the energy demand and prevention again energy crisis.

The Forearm Power Generating Gym Equipment is not a Primary source of energy, but rather can be used as a secondary source same as solar harvesting devices and this setup can be used in Private Gym, Public Gym, etc. In this method only the Pinion and Rack play a major role, thus the method is quite easy to maintain and implement. But to implement this project in gyms, more equipment in the gym should be designed and remodified to generate power. This project aims to show that this method is quite sufficient to generate enough power to charge small-scale devices.

REFERENCES

[1] Power Generation through Gym Equipment. Ansari Saddam Husain, Gujja Govardhan, Gund Kumar, Mohd Ahmed, Vivek Tiwari, Yakub Khan, (2012), ISOR Journal of Engineering
[2] Lat Pull-Down Machine Power Generation. M. Muttu Subash, S. Prathiban, (2016), International Journal of Engineering Science and Computing.
[3] Power Generation by Gym Pull-Up Machine. Roshan Ojha, Shravan Kumar, Rahul Raj, T. Hari Prasad, Naveen Kumar, Dr. K.S. Bhadrinarayan (2016), International Research Journal of Engineering and Technology
[4] Turning Workout into Electricity Using Lat Pull-down Machine Saylee Bidwai, Amruta Jaykar, Shivani Sinde, (2017), International Journal of Engineering and Technology.
[5] Energy Harvesting from Gym Equipments. Madhup Kumar, Dr. G S Mundada, (2017), International Journal of Innovative Research

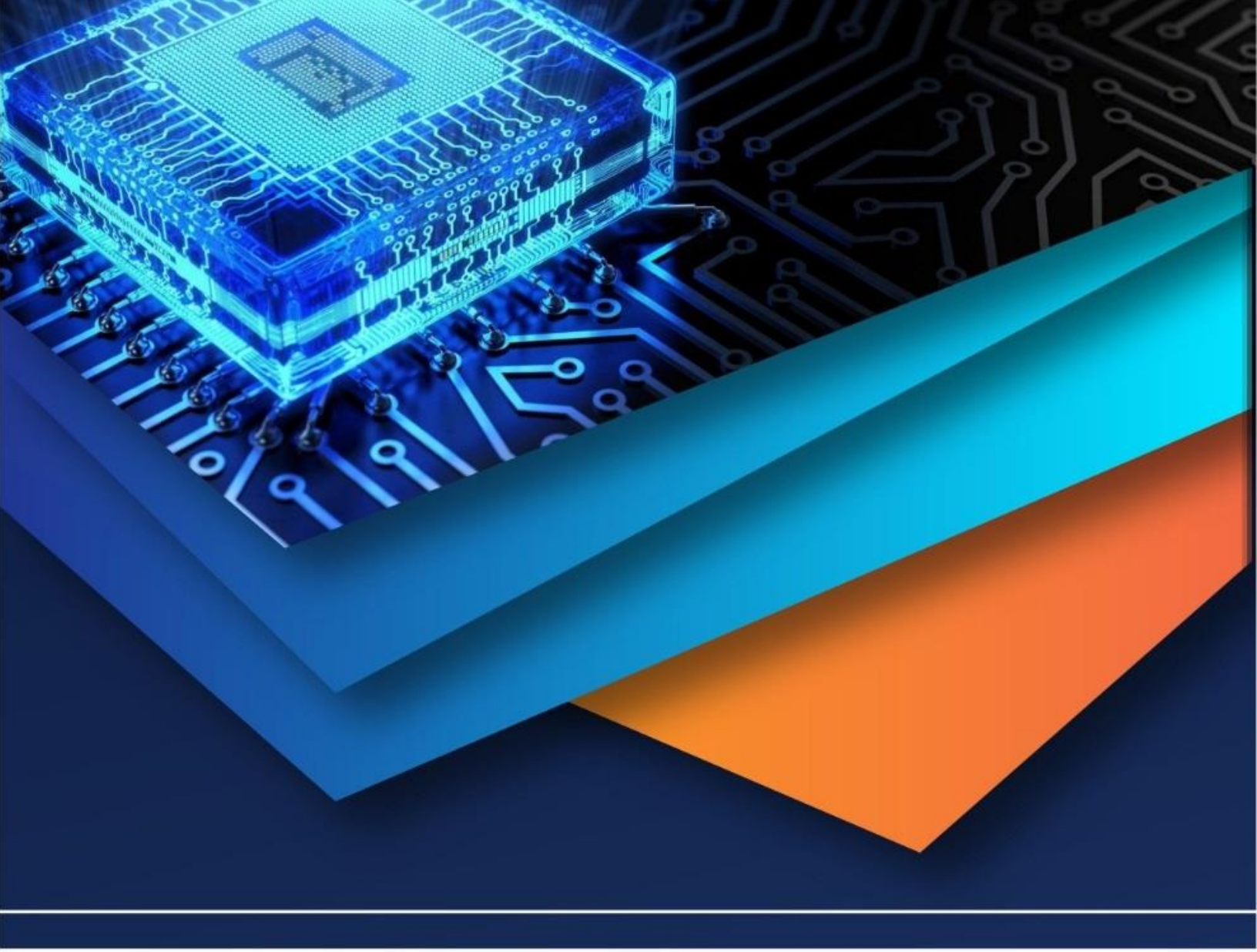

10.22214/IJRASET

45.98

IMPACT FACTOR: 7.129

IMPACT FACTOR: 7.429

INTERNATIONAL JOURNAL FOR RESEARCH

IN APPLIED SCIENCE & ENGINEERING TECHNOLOGY

Call : 08813907089 (24*7 Support on Whatsapp)