iJRASET
International Journal For Research in Applied Science and Engineering Technology



INTERNATIONAL JOURNAL FOR RESEARCH

IN APPLIED SCIENCE & ENGINEERING TECHNOLOGY

Volume: 11 **Issue:** V **Month of publication:** May 2023

DOI: https://doi.org/10.22214/ijraset.2023.53490

www.ijraset.com

Call: 08813907089 | E-mail ID: ijraset@gmail.com

International Journal for Research in Applied Science & Engineering Technology (IJRASET)
ISSN: 2321-9653; IC Value: 45.98; SJ Impact Factor: 7.538
Volume 11 Issue V May 2023- Available at www.ijraset.com

Need Based Design and Topology of Power Supply for Industrial Instruments

Dr. Anwarul M. Haque[1], Tushar R. Shrivas[2]
[1]*Assistant Professor,* [5]*Student, Power Electronics Engineering, VGEC, Chandkheda, Ahmedabad, Gujarat, India*

Abstract: ***Process control instruments plays decisive role in regulation and monitoring like control actions which requires efficient circuit analysis and different input and output power supplies to make it connectable in panels or used separately. This paper gives a comprehensive study of power supply used in instruments, based on power electronics principle used to improve circuit performance. Furthermore, it also includes analysis for energy conversion, switching devices, control methods, conduction modes and protection mechanism to make the supply efficient. Supply topologies i.e., Linear& Switched Mode Power supply are used as per the requirement of instruments. Both the supplies include different challenges and solutions to overcome losses and make the supply efficient. The analysis includes various parameters like voltage, current, power loss, waveform, efficiency, switching, feed-back and ringing. These parameters affect the whole supply if problem occurs in any of them.***
Keywords: Power electronics, rectifier, SMPS, Linear circuit, snubber circuit, feedback, ringing, switching circuits.

I. INTRODUCTION

Process control equipment in industries plays a critical role in monitoring and controlling a variety of industrial processes like indication of process and requires efficient circuit analysis for proper operation and reliable power solutions to make it efficient [1], [3]. This research paper includes comprehensive research focused on the power supply used in these devices, using power electronics principles to analysis and improve circuit performance. Equipment often uses different power topologies to meet specific needs such as Linear and switching power supplies [4], [16].

Each of these types of supplies presents unique challenges and requires customized solutions to minimize losses and maximize efficiency. Efficient energy conversion, reliable switching devices, effective control methods, and robust protection mechanisms are the key aspects in this work. The use of power electronics principles improves the performance and efficiency of power systems and ensures the stable and accurate operation of control [2], [7]. Power system analysis includes various parameters such as voltage, current, power consumption, waveform characteristics, efficiency, switching behaviour, feedback mechanism, and mitigation of ringing effects.

Problems with these parameters can have a significant impact on the overall performance and reliability of the power system. The bits of knowledge and strategies displayed in this paper will helps development of control supply innovation for mechanical hardware, driving to move forward execution, precision and effectiveness over an assortment of industrial divisions.

II. TYPES OF POWER SUPPLY

Industrial instruments mainly required DC to operate which can be achieved by rectification process of AC in which AC is converted to required DC to supply the circuit [5], [14].

Power supply can be achieved in various ways like transformer less power supply, linear power supply, switched mode power supply but every power supply has some restriction and advantages [8]-[13].

In case of transformer-less power supply we can get required DC output but has current limitation and energy loss which is not acceptable at high power requirement [6], [15].

In industry other two types of power supply which can be modified easily to make more efficient and required less maintenance. Power supply used in any instrument are of two types are selected as per requirement and application as below:

1) Linear power supply.
2) Switched mode power supply.

In both the power supply, basic difference comes in term of transformers, switching circuitry and input / output range of power supply.

©IJRASET: All Rights are Reserved

ISSN: 2321-9653; IC Value: 45.98; SJ Impact Factor: 7.538
Volume 11 Issue V May 2023- Available at www.ijraset.com

III. LINEAR POWER SUPPLY

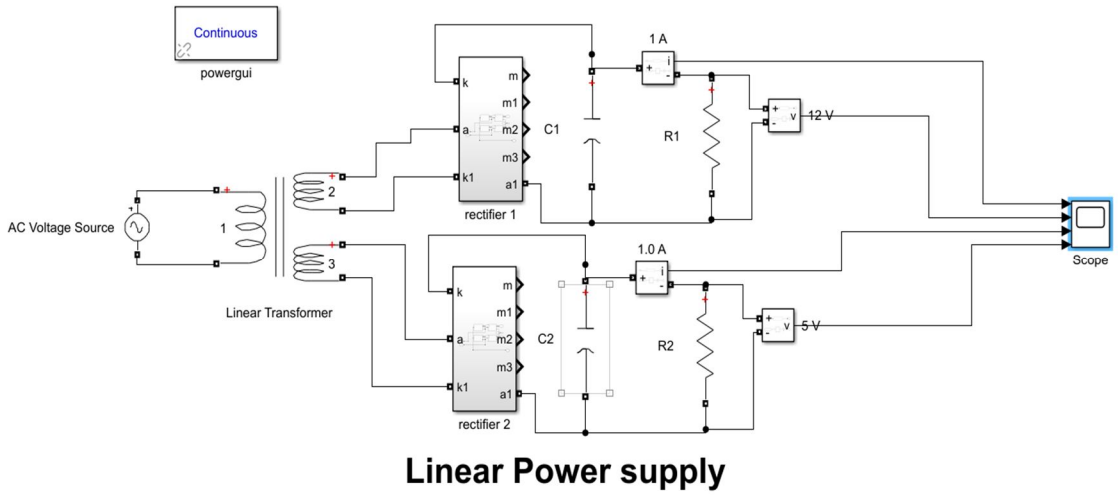

Fig 1 Circuit diagram of Linear supply using MATLAB

Here, at first AC voltage is stepped down using linear transformer to get the desired stable output which is rectified using diode bridge and has a filter capacitor to make dc smooth from pulsating. Fig.1 shows the basic circuit of linear power supply which has input 230V AC in primary side and has two secondary outputs of 12V and 5V DC which is the basic need to drive 12V relays and 5V for display and led segments Fig.2. Linear power supply use transformer to step-down the high voltage input to required output, linear power supply use voltage regulator at output side connected with a filter providing the stable and constant output.

Linear power supply has simple working as it rectifies the AC input by stepping it down to DC, but has a disadvantage of using it at place where voltage fluctuates which interrupts the output in both low and high voltage situations. When input voltage become low which affects the transformer to generate less output as required which cause unstable in voltage regulator and output voltage become low. While in case of high voltage transformer generates high output and cause short-circuit in DC side by overloading the components, as transformer input fluctuate it cause secondary to raise to go down which affect the overall supply of circuit.

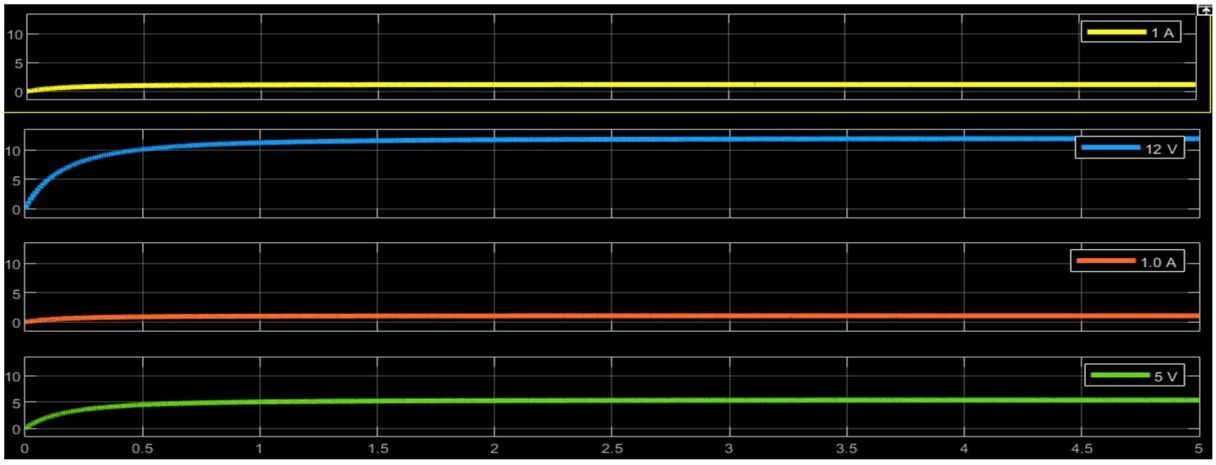

Fig 2 Output Waveform of Linear Supply

While taking Linear power supply it gives below advantages compare to SMPS:

1) It has low noise and ripple output which makes it low fluctuation.
2) It is widely used for low power requirements outputs.
3) In case of audio and RF based need it is required as it generates low electromagnetic interference.
4) It has less components compare to SMPS which makes it easy to troubleshoot and maintenance.
5) It can easily use where load variation occurs and low cost as less components are used.

©IJRASET: All Rights are Reserved

ISSN: 2321-9653; IC Value: 45.98; SJ Impact Factor: 7.538
Volume 11 Issue V May 2023- Available at www.ijraset.com

IV. SMPS (SWITCHED MODE POWER SUPPLY)

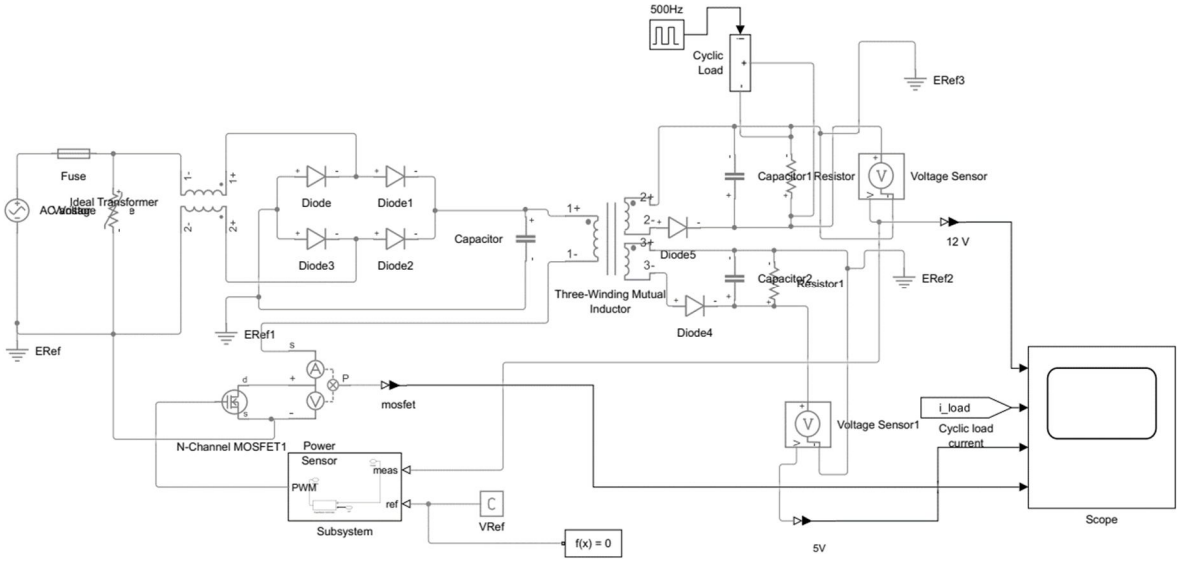

Fig 3 Switched Mode Power Supply circuit

Working with SMPS is clearly different compare to linear as it has complex circuitry and closed loop system to maintain the output supply. SMPS uses switching IC or switching device to control supply towards transformer which helps to regulate the output. In Fig.1 we require 12V and 5V output for that we have designed and SMPS circuit based on MOSFET switching which is controlled through PWM generator by comparing the output generated at secondary side by making closed loop system. When the output voltage become less due to less input supply condition then PWM makes more pulses so that switching increase in the MOSFET to maintain the output voltage Fig.3. Similarly, as the output voltage is more than required voltage then MOSFET comes under saturation state which maintains the switching time Fig.4-Fig.6.

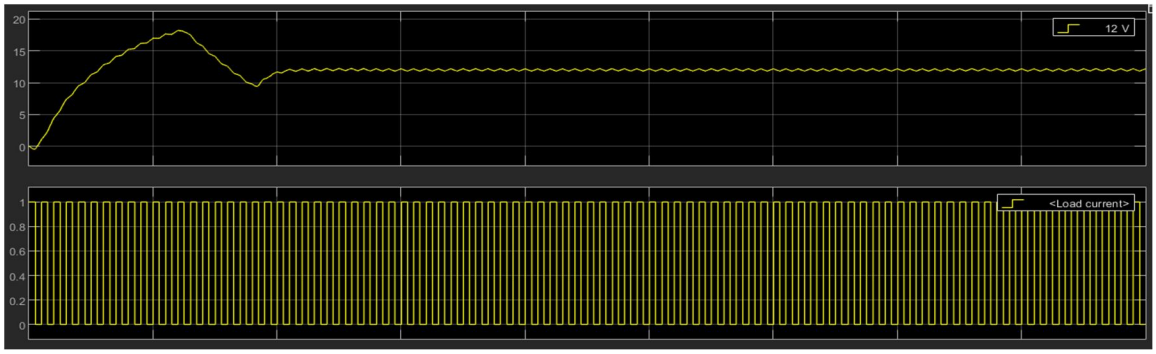

Fig 4 Output voltage and Load current

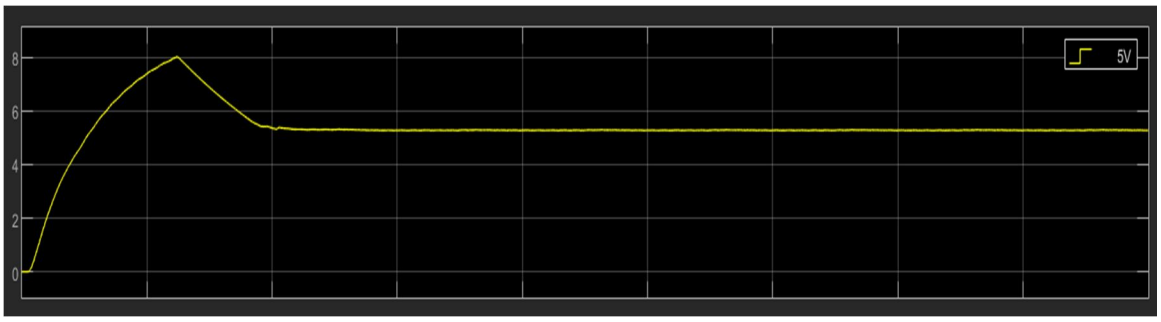

Fig 5 Feed-back voltage

©IJRASET: All Rights are Reserved | SJ Impact Factor 7.538 | ISRA Journal Impact Factor 7.894 |

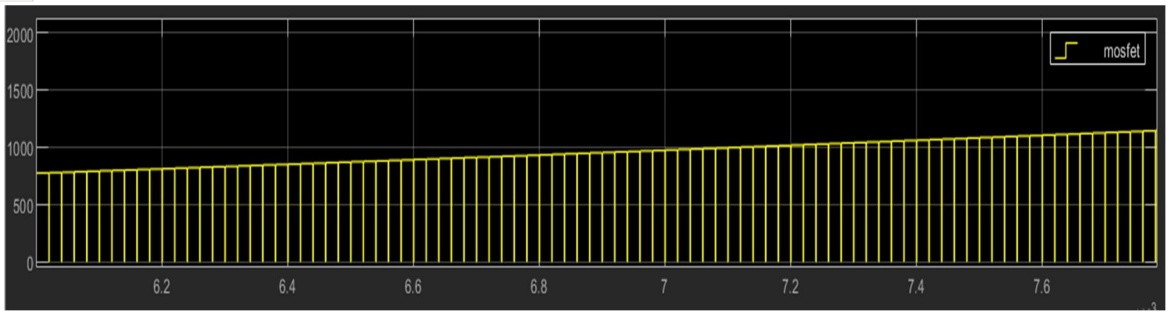

Fig 6 MOSFET Switching

While taking Switched Mode Power Supply it gives advantages compare to linear power supply as under:

1) SMPS has higher efficiency as it uses MOSFET and transistor type switching device to control the power flow.
2) It is compact in size which makes it easy to use in limited space.
3) It is light in weight due to its compact size while linear supply is heavy compared to it.
4) As it worked on switching devices it provides wide input voltage range like 100V to 270V AC.
5) It provides wide output voltage range with multiple voltage levels
6) It delivers high efficiency,
7) It is cost effective.

V. PROTECTION CIRCUIT

Protection circuit in instruments are used in different ways to protect the switching devices, ICs and over all circuit from overloading or due to voltage spikes. Here, are the examples of circuit used in power supply are as below:

A. Fuse and MOV (Metal Oxide Varistor)

Using fuse and MOV before rectification or at input side to protect circuit from overload during load fluctuation. As load requirement changes and supply is designed to use at certain load conditions then it withdraw higher amount of current which may cause short-circuit. To avoid it, we use rated fuse which blow up after certain level of increment in current at load. Using MOV during change in voltage level helps to protect the circuit as the voltage spikes occurs for longer duration MOV become short-circuited which blows-up fuse.

B. Ringing effect and snubber circuit

Using snubber circuit across the switching device to solve hard switching issue during ON/OFF conditions of switch. Not using snubber circuit may cause ringing effect which is shown in Fig.7.

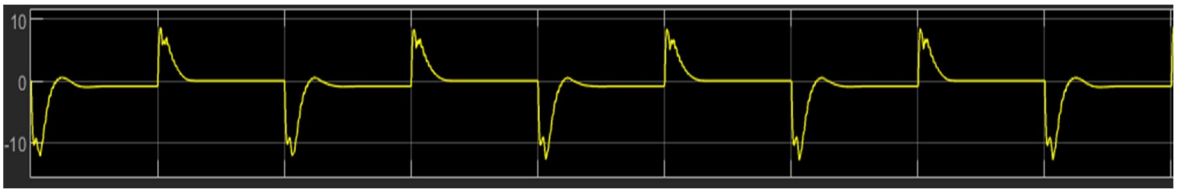

Fig 7 Ringing effect during switching

C. Types of Snubber circuit

By using the RC snubber circuit across the switch or switching device ringing must be solved easily which increases the efficiency and reduce stress across switch during ON/OFF time. In SMPS we widely used RCD snubber circuit to make it more efficient to supply flow that stored inside transformer through diode, RCD means resistor capacitor is connected in parallel connection and in series with diode across transformer's primary side. Another option is placement of switching device to have air ventilation which makes it cool during fast switching operation as the it has auto shut down feature when input voltage suddenly arises to protect the switching device and whole circuit till supply become stable to use again. During high frequency switching SMPS makes humming sound and vibration which is due to hard switching of MOSFET or ICs which is resolved using snubber circuit.

©IJRASET: All Rights are Reserved | SJ Impact Factor 7.538 | ISRA Journal Impact Factor 7.894 |

VI. CONCLUSION

In conclusion, this research paper includes the power supply that is widely used in industrial instruments to be connected with panels or to use separately. By using power electronics principles of rectifier, switching circuit, PWM generation, closed loop feedback and snubber protection to make the power supply more efficient, less power consumption, easy to use at certain voltage range, high performance and providing overload and short-circuit protection. In summation to this research, the ringing effect in switching devices create vibrations and humming sound that affects the life of switching devices by creating an undue stress on the instruments. In order to abate the ill effects of this phenomenon we deploy snubber circuit across switching device to ensure optimal working.

REFERENCES

[1] Ned Mohan, Tore M. Undeland, And William P. Robbins: Power Electronics: Converters, Applications, and Design" (1989).
[2] Muhammad H. Rashid: Power Electronics Handbook (2010).
[3] Muhammad H. Rashid: Power Electronics: Circuits, Devices and Applications (2014).
[4] Christophe Basso: Switch-Mode Power Supplies: SPICE Simulations and Practical Designs (2008).
[5] V. R. Moorthi: Power Electronics: Devices, Circuits, and Industrial Applications (Published in 2009).
[6] Miss Madhuri. U. Naik, Prof A. A. Apte, “Methods for Mitigation of Harmonics Due to SMPS”, IJERT. Volume 3 issue 1. 29-01-2014.
[7] Hang-Seok Choi, D. Y. Huh, “Techniques to minimize Power Consumption of SMPS in Standby Mode”, IEEE, 2005.
[8] Ashraf A. Mohammed, Samah M. Nafie, “Flyback converter design for low power application”, IEEE, 2016.
[9] T. Halder, “An improved and simple hybrid energy recovery snubber circuit for generic power converters and protection scheme”, IEEE.
[10] B. K. Bose, In-Dong Kim, “A new snubber circuit for multilevel inverter and converter”, IEEE, 2002.
[11] T. Halder, “PI controller tuning & stability analysis of the flyback SMPS”, IEEE, 2015.
[12] C. M. Tavade, L. M. Deshpande “Design and Implementation of high frequency transformer for SMPS Based flyback DC-DC converter”, IJET, 2012.
[13] R. Erickson, M. Madigan, “Design of a simple high-power-factor rectifier based on the flyback converter”, IEEE, 2002.
[14] Power Control Circuits https://digital-library.theiet.org/content/books/po/pbpo072e
[15] Converter Circuits https://www.electronicshub.org
[16] Luke James, Basic Knowledge - Snubber Circuit, Power & Beyond https://www.power-and-beyond.com/what-are-snubber-circuits-and-why-are-theyused-in-power-electronics-a-911791/

©IJRASET: All Rights are Reserved | SJ Impact Factor 7.538 | ISRA Journal Impact Factor 7.894 |

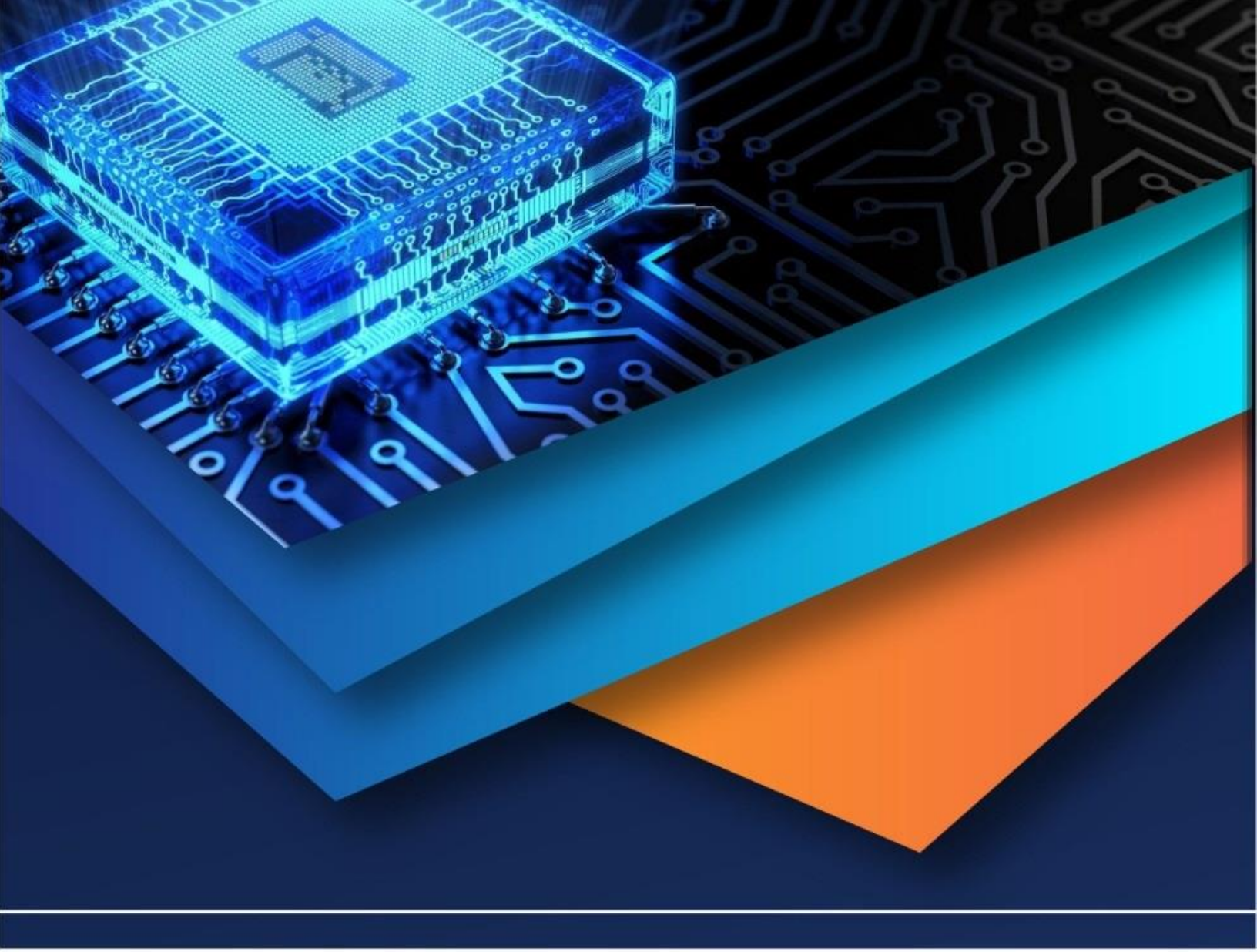

10.22214/IJRASET

45.98

IMPACT FACTOR: 7.129

IMPACT FACTOR: 7.429

INTERNATIONAL JOURNAL FOR RESEARCH

IN APPLIED SCIENCE & ENGINEERING TECHNOLOGY

Call : 08813907089 (24*7 Support on Whatsapp)