iJRASET
International Journal For Research in Applied Science and Engineering Technology



INTERNATIONAL JOURNAL FOR RESEARCH

IN APPLIED SCIENCE & ENGINEERING TECHNOLOGY

Volume: 10 **Issue:** VI **Month of publication:** June 2022

DOI: https://doi.org/10.22214/ijraset.2022.44704

www.ijraset.com

Call: 08813907089 | E-mail ID: ijraset@gmail.com

International Journal for Research in Applied Science & Engineering Technology (IJRASET)
ISSN: 2321-9653; IC Value: 45.98; SJ Impact Factor: 7.538
Volume 10 Issue VI June 2022- Available at www.ijraset.com

Robotic Arm Vehicle with Object and Facial Recognition

Mr. Mahesh Runnaware[1], Mr. Kunal Muddamwar[2], Mis. Damini Chaudhari[3], Mr. Hemant Shende[4], Mr. Someshwar Muddamwar[5], Prof. Mr. Mohammad Hassan Ansari[6]
[1, 2, 3, 4, 5, 6] *JD College of Engineering and Management*

Abstract: ***In this paper, we are sharing the features of the Android-based robotic arm with the object and facial recognition. In today's world, there are several robotic arms working in multiple sectors to reduce human efforts. Hence they are up to their marks but still, there are some drawbacks the robotic arm would not perform several tasks that are assigned to them. So we introduced the prototype Robotic arm vehicle with the object and facial recognition. This prototype is used to reduce human efforts this is a movable robotic arm prototype that can move from one position to another position which reduces the human efforts in multiple sectors and also contains facial and object detection so it is easy to detect any object and controlled by anywhere by an android application.***

Keywords: Robotic Arm, Object Detection, Facial Recognition

I. INTRODUCTION

In today's world, robotic arms are widely used machines in various multiple industrial sectors. These robotic machines are used to reduce human efforts and errors in the industries on a very large scale. These machines are used in a hazardous and dangerous places where humans can't work.

So we have developed a robotic arm vehicle with objects and facial recognition this prototype is used to overcome all these situations facing today's industries. This robotic arm prototype is easy to operate from anywhere via the android application and we can perform multiple tasks from this prototype and has object detection to recognize any object in front of him and stored in the database and also carried a facial recognition feature to authenticate the person identity.

II. COMPONENTS

A. Robotic Arm

Robotic arm technology is based on the human hand prototype the human has several joints for movement of the hand same this robotic arm has a combination of links attached in parallel and non-parallel types. Which is controlled by the programmable components like microcontrollers to perform various tasks assigned by the program. This robotic arm is designed for industrial purposes like welding, gripping, spinning, lifting heavy weights, etc.

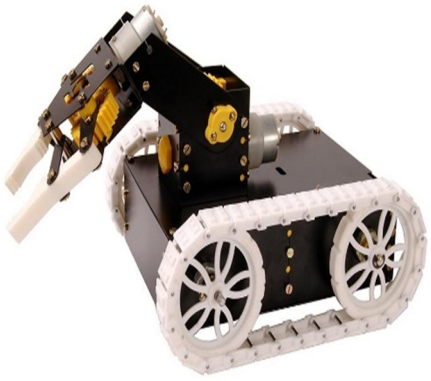

Fig 1: Robotic arm kit

©IJRASET: All Rights are Reserved

B. Arduino Uno R3

Arduino Uno is a programmable logic circuit board that comes under the family of Arduino. This board is a low-cost device reliable and flexible that can be easily used and program the open-source microcontroller which is in-built on the board ATmega328P microcontroller chip. This Arduino Uno board has several pins configurations it has 14 digital input/output pins (where 6 pins are used for PWM output), 6 analog inputs pin, and has a 16 MHZ ceramic resonator assembled, and this board has a USB serial connector for programming and the power voltage purpose 5V, and ICSP header and a reset button. This board is configured by the Arduino IDE (Integrated Development Environment) software to program this board. Also, there are serial communication is established by RX/TX pin in the board where TX works to transmit the data from the board and RX is used to receive the data from the board.

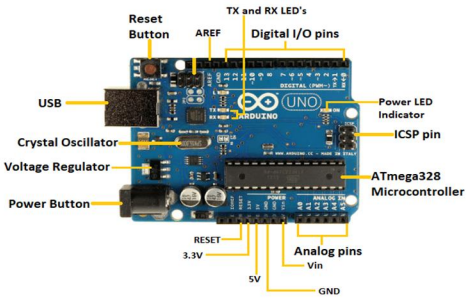

Fig 2: Arduino Uno Board

C. ESP32 Cam Module

The Esp32 cam module is a compact small size device this Esp32 comes under (Electronic Stability Program) component family with the OV2640 cam module which is flexible and reliable to use with a very low power consumption this provides a TF card slot that supports up to 4G TF card data storage capacity. This board support Bluetooth and Wi-Fi connectivity which gives access to video streaming and image uploading. And is widely used in intelligent IOT applications like QR identification, Face recognition, Object detection, smart homes, wireless monitoring, etc.



Fig 3. Esp32 cam Module

D. Hc-05 Bluetooth Module

The Hc-05 Bluetooth Module is a simple to use Bluetooth device supported SPP (Serial Port Protocol) module, this device is employed to style for a transparent wireless serial connection setup. Which makes it simple thanks to communicating or interfacing with the system. This device is working within the methodology of master and slave which suggests it's able to use neither receiving nor transmitting data. This device is operate the 5V power supply and features a rest pin configuration and has an RX and TX pin to transmit the information and receive the information from the system devices.

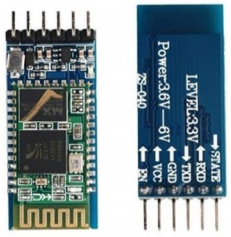

Fig 4. Hc-05 Bluetooth Module

E. Artificial Intelligence

In today's world, artificial intelligence is a technology that is widely used in various multiple industrial sectors. Artificial intelligence is an algorithm or we can say a program that is used to program the computers or devices to increase their efficiency. AI is totally based on data gathering and analysis and is used in a better way. This technology is inspired and developed by reference to the human mind this technology is used by the industries to increase productivity and efficiency in both qualitative and quantitative ways.

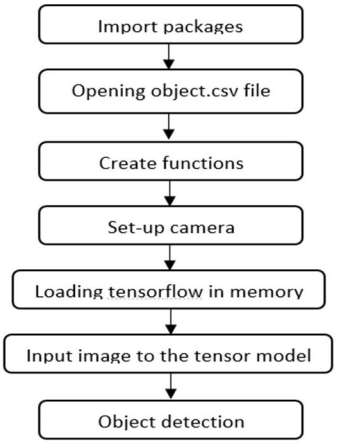

Fig 5. Tensor flow Construction

F. Object Detection

Object detection technology comes under robotic and AI implementation which comes in computer vision the algorithm is been used to identify the object through AI and used the data sets or data analytics to perform object detection this algorithm is written to take images and process them through the data sets match and implement the object detection. The main purpose of object detection is to duplicate the intelligence employing a computer.

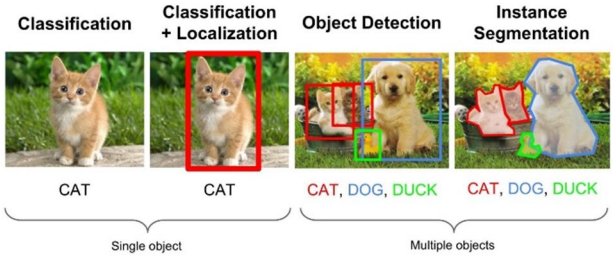

Fig 6. Object Detection

G. Facial Recognition

Facial recognition is a widely used AI technology in the world that comes under computer vision which identifies the faces by the algorithm. In facial recognition, the algorithm or the program run and collect the images in the datasets or the AI used the datasets to identify the faces this technology is mostly used for security purposes like biometrics or facial-ID to authenticate the person, etc. This technology was highly employed in enforcement, airports, and boarders control, finding missing persons, and reducing retail crimes.



Fig 6. Facial Recognition

III. BLOCK DIAGRAM

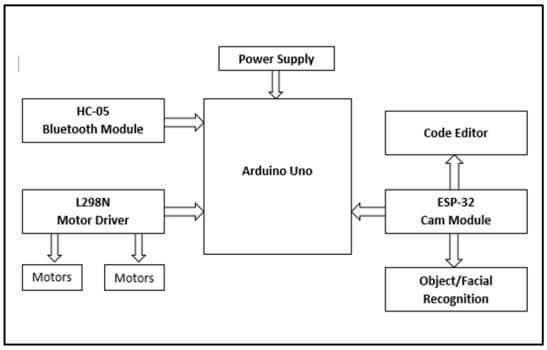

IV. CIRCUIT DIAGRAM

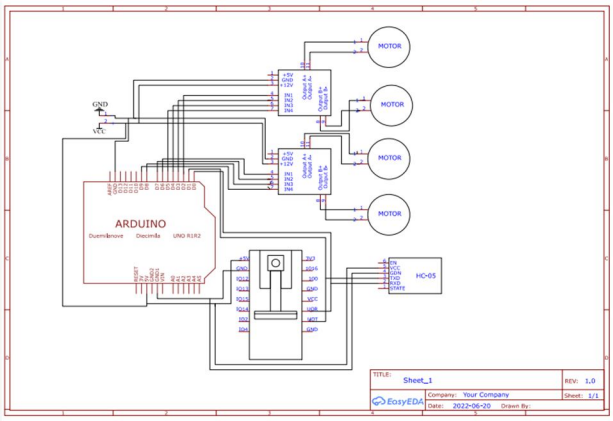

V. FLOW DIAGRAM

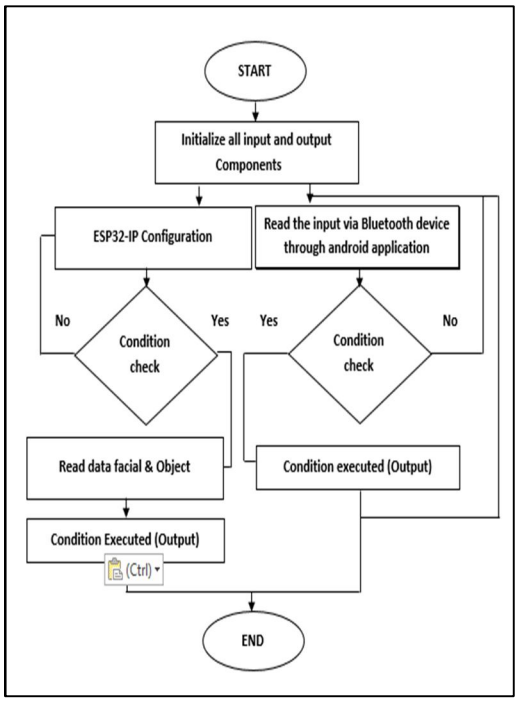

VI. PROJECT IMPLIMENTATION

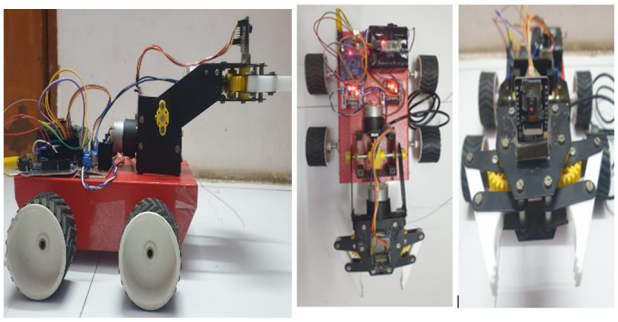

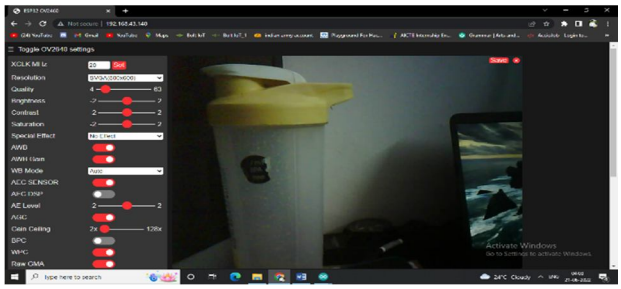

VII. METHODOLOGY

In today's world, there is multiple robotic arm machine which was working in multiple industries on daily bases some of them are used for automobile manufacturing, nuclear industries, army purposes, etc. But there are so the problem comes to operate the robotic arm moving them from one position to another way bare a big loss to the industry. This prototype is developed for the multipurpose industrial uses this prototype is a movable robotic arm that can move from one position to another via the android application and it's very reliable and flexible to operate this prototype also contain a camera that can operate with the functionality with the object and facial detection. This prototype is assembled and developed by the use of several components like Arduino Uno, Esp32 cam, L298N motor driver, Hc-05 Bluetooth module, and an FT232RL Module device and has a power supply of 12V battery to operate with 12V DC motors.

This prototype is operated by an algorithm or we can say by a program first the power supply is given to the Arduino Uno and the corresponding devices like Hc-05, L298N, FT232RL, and Esp32 cam module then the Bluetooth device is connected to the android application and the command whichever is given that is received by the Hc-05 serial pin RX and provide to the microcontroller placed in Arduino Uno the program execute and run the respective command and the prototype work as a response. At the same time, the Esp32 cam module Configuration started and the IP address for Esp32 cam generated the IP which is been provided by the Esp32 were used by the algorithm and the live streaming of the object and facial recognition initiated and we can see all the activities on the System or mobile screen. The purpose of making this prototype is to reduce human efforts and cut the cost efficiency. This prototype can be used in military surveillance, Automobile Industries, or nuclear industries where humans can’t work properly.

VIII. CONCLUSION

Hence, we have successfully gone through several Research papers which are been published by different manipulators for better knowledge and understating of the development of Robotic Arm Vehicle.

IX. ACKNOWLEDGMENT

This review paper was carried out at JD College of Engineering and management, under the guidance of Prof. Mohammad Hassan Ansari.

REFERENCES

[1] Priyambada Mishra, Riki Patel, Trushit Upadhyaya, Arpan Desai “Review of Development Of Robotic Arm Using Arduino UNO”, International Journal on Recent Researches in Science, Engineering and Technology, ISSN: 2348-3105 Volume 5, Issue 5, May 2017.

[2] Priyambada Mishra, Riki Patel, Trushit Upadhyaya, Arpan Desai “Review of Development Of Robotic Arm Using Arduino UNO”, International Journal on Recent Researches in Science, Engineering and Technology, ISSN: 2348-3105 Volume 5, Issue 5, May 2017.

[3] Areepen Sengsalonga, Nuryono Satya Widodo "ObjectMoving Robot Arm based on Color", Signal and Image Processing Letters, Vol.1. No.3, November 2019, pp. 13-19 ISSN 2714-6677.
[4] Anughna N, Ranjitha V, Tanuja G "Design and Implementation of Wireless Robotic Arm Model using Flex and Gyro Sensor", International Journal of Recent Technology and Engineering (IJRTE) ISSN: 2277-3878, Volume-8 Issue-5, January 2020.
[5] Rahul Kumar, Sunil Lal, Sanjesh Kumar, and Praneel Chand "Object Detection and Recognition for a Pick and Place Robot".
[6] Dr. Bindu A Thomas, Stafford Michahial, Shreeraksha. P, Vijayashri B Nagvi, Suresh M "Industry Based Automatic Robotic Arm", International Journal of Engineering and Innovative Technology (IJEIT) Volume 2, Issue 11, May 2013, and ISSN: 2277-3754 ISO 9001:2008 Certified.
[7] Timothy Karl Findling "Robotic Arm Tracing Curve Recognized by Camera", Florida Institute of Technology, Melbourne, Florida December 2016.
[8] Prasad Ban , Shweta Desal, Revati Barge , Pallavi Chava "INTELLIGENT ROBOTIC ARM" ,ITM Web of Conferences 32, 01005 (2020) ,ICACC-2020.
[9] Sanzhar Rakhimkul, Anton Kim, Askarbek Pazylbekov and Almas Shintemirov "Autonomous Object Detection and Grasping Using Deep Learning for Design of an Intelligent Assistive Robot Manipulation System".
[10] Sharath Surati1, Shaunak Hedaoo1, Tushar Rotti1, Vaibhav Ahuja1, Nishigandha Patel2 "Pick and Place Robotic Arm: A Review Paper" International Research Journal of Engineering and Technology (IRJET) e-ISSN: 2395-0056 Volume: 08 Issue: 02 | Feb 2021 www.irjet.net p-ISSN: 2395-0072
[11] Volume 3, Issue 3, March– 2018 International Journal of Innovative Science and Research Technology ISSN No:-2456-2165 IJISRT18MA413 www.ijisrt.com 527 "Review on Design and Development of Robotic Arm Generation-1"
[12] © May 2021| IJIRT | Volume 7 Issue 12 | ISSN: 2349-6002 IJIRT 151134 INTERNATIONAL JOURNAL OF INNOVATIVE RESEARCH IN TECHNOLOGY 11 "Review Paper on Wireless Movable Robotic ARM" Rahul Mohadikar1 , Amit Bokade2 , Kalyani Barapatre3 , Sanjana Bagde4 , Dr. J. S. Gawai
[13] The Federal Polytechnic Bida, School of Engineering Technology, 8th National Engineering Conference 2018 DEVELOPMENT OF A ROBOT ARM: A REVIEW *Ibrahim Sulaiman, 1Engr. Salam M. O. and 1Yamajin Tanimu

©IJRASET: All Rights are Reserved | SJ Impact Factor 7.538 | ISRA Journal Impact Factor 7.894 |

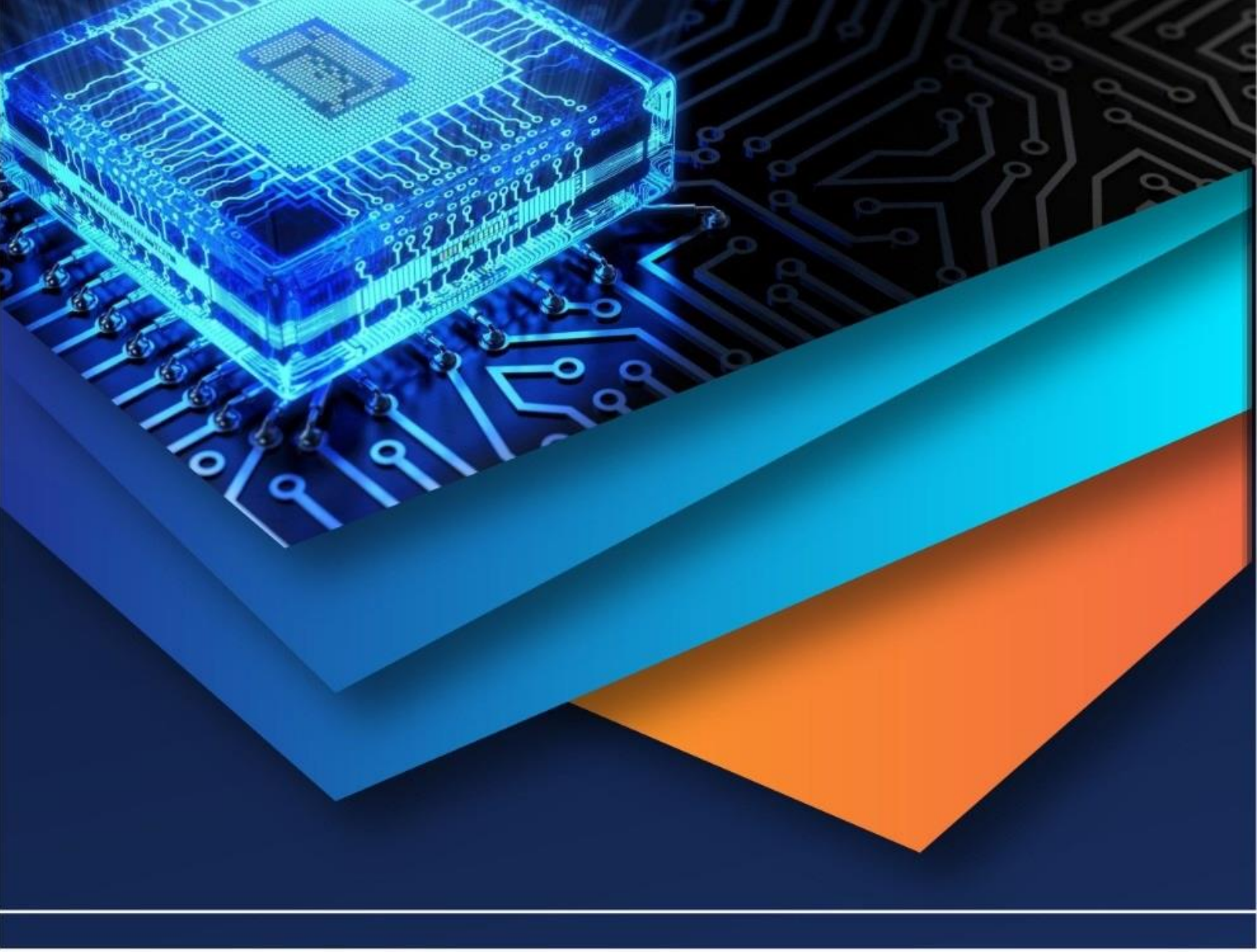

10.22214/IJRASET

45.98

IMPACT FACTOR: 7.129

IMPACT FACTOR: 7.429

INTERNATIONAL JOURNAL FOR RESEARCH

IN APPLIED SCIENCE & ENGINEERING TECHNOLOGY

Call : 08813907089 (24*7 Support on Whatsapp)