iJRASET
International Journal For Research in Applied Science and Engineering Technology

# INTERNATIONAL JOURNAL FOR RESEARCH

IN APPLIED SCIENCE & ENGINEERING TECHNOLOGY

**Volume:** 14 **Issue:** I **Month of publication:** January 2026

**DOI:** https://doi.org/10.22214/ijraset.2026.76323

www.ijraset.com

Call: 08813907089 | E-mail ID: ijraset@gmail.com

International Journal for Research in Applied Science & Engineering Technology (IJRASET)
*ISSN: 2321-9653; IC Value: 45.98; SJ Impact Factor: 7.538*
*Volume 14 Issue I Jan 2026- Available at www.ijraset.com*

# Structural Analysis of Drone Wings Using Composite Materials

Aadil Parwez[1], Sanjay Singh[2], Ravishanker Choudri[3]
*[1]Research Scholar, [2]Assistant Professor, [3]HOD, Sagar Institute of Science and Technology, Bhopal (M.P)*

***Abstract: The structural integrity and performance of drone wings are of paramount importance in modern unmanned aerial vehicle (UAV) design. Lightweight yet robust materials are essential to ensure optimal aerodynamic efficiency, reduced energy consumption, and high maneuverability. This study focuses on the structural analysis of drone wings constructed from advanced composite materials—Carbon Fiber Reinforced Polymer (CFRP) and Glass Fiber Reinforced Polymer (GFRP)—using finite element analysis (FEA) techniques in ANSYS Workbench. The primary objective is to evaluate and compare the total deformation, maximum principal stress, and maximum principal strain behavior of these two materials when subjected to aerodynamic loads under realistic operating conditions. A tapered drone wing geometry was modeled in CATIA V5 with a span of 6.898 meters, a root chord of 1.152 meters, a tip chord of 0.560 meters, and a uniform thickness of 5 millimeters. The CAD model was then imported into ANSYS Workbench for meshing, boundary condition setup, and static structural simulation. A fixed constraint was applied at the root to represent the fuselage connection, and a uniform surface pressure load was applied to replicate aerodynamic lift forces. Both CFRP and GFRP materials were analyzed under identical load and constraint conditions to ensure consistency in comparative evaluation. The results reveal that CFRP exhibits superior stiffness and lower deflection compared to GFRP, which demonstrates higher flexibility and greater strain under the same loading scenario. Such findings underline CFRP's suitability for high-performance and endurance drones, while GFRP remains a viable choice for cost-sensitive or short-range applications. This research contributes to the growing body of knowledge on composite applications in aerospace and drone structures, emphasizing the balance between material cost, performance, and weight efficiency. Future work can expand this study to dynamic and fatigue analyses, explore hybrid composites, and incorporate experimental validation.***

***Keywords: CFRP, GFRP, Drone Wing, ANSYS, Finite Element Analysis, Composite Materials.***

## I. INTRODUCTION

Unmanned Aerial Vehicles (UAVs), commonly referred to as drones, have revolutionized modern industries ranging from surveillance and logistics to agriculture and defense. The performance of these drones heavily depends on the aerodynamic and structural design of their wings, which generate lift and provide stability during flight. As drones evolve toward longer endurance, higher payload capacities, and improved efficiency, there is an increasing demand for lightweight and high-strength materials that can endure complex aerodynamic loads without excessive deformation. Composite materials, particularly Carbon Fiber Reinforced Polymer (CFRP) and Glass Fiber Reinforced Polymer (GFRP), have emerged as leading candidates for drone wing fabrication due to their exceptional mechanical properties, low density, and corrosion resistance. The use of composites allows engineers to achieve superior stiffness-to-weight ratios while maintaining structural reliability under various flight conditions. Traditional metallic materials, while strong, add unnecessary weight and reduce the overall energy efficiency of UAV systems. CFRP offers remarkable stiffness and strength, making it ideal for high-performance drones that require minimal deformation under aerodynamic loading. However, its high manufacturing cost often limits its application in smaller or budget-conscious UAVs. On the other hand, GFRP provides a cost-effective alternative with moderate mechanical performance, making it suitable for low-speed or short-range drones. This paper presents a comprehensive comparative study of CFRP and GFRP drone wings using Finite Element Analysis (FEA) in ANSYS Workbench. The study involves a static structural analysis of a tapered wing geometry, designed to represent a realistic drone configuration. The main parameters of interest include total deformation, equivalent (von Mises) stress, and strain distribution. By analyzing these factors, the research aims to highlight the influence of material choice on structural performance, stiffness, and load-bearing capability. The ultimate goal is to provide designers with insights that can guide material selection for efficient and durable drone wing structures.

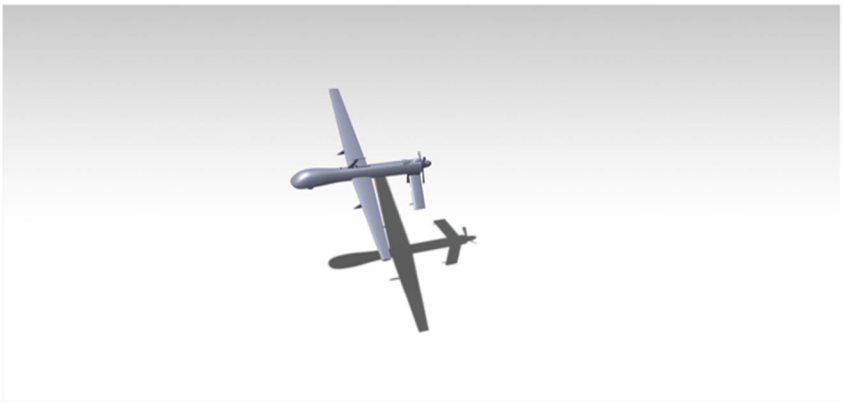

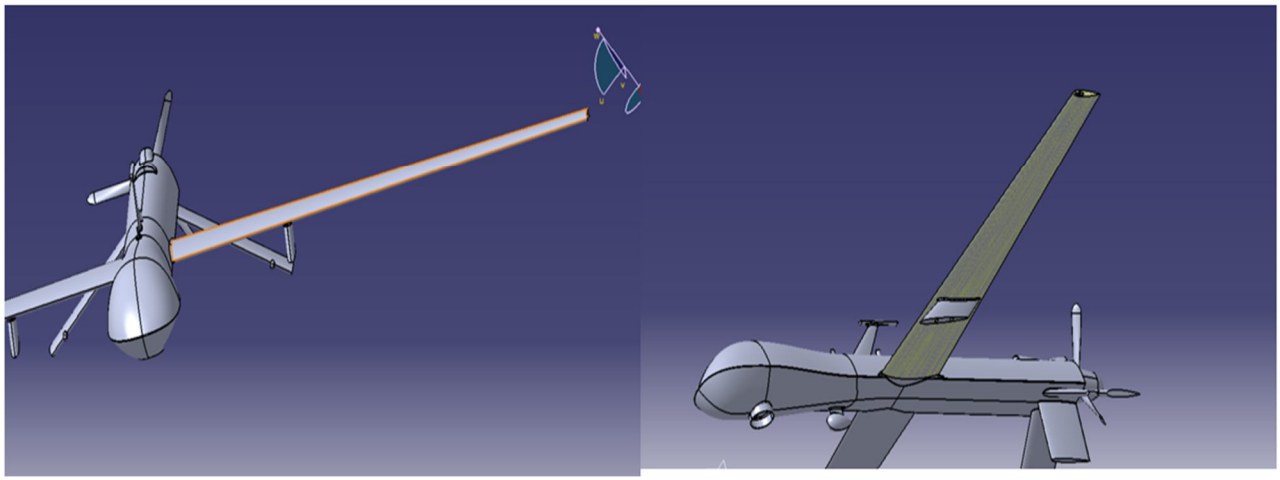

Figure 1: A general view of 3D model of a tapered drone wing using CATIA V5

## II. MATERIALS USED

Two advanced composite materials—CFRP and GFRP—were selected for this study. CFRP, made of carbon fibers in an epoxy matrix, exhibits exceptional strength, high stiffness, and lightweight characteristics, making it ideal for high-performance drones. GFRP, made of glass fibers in a polymer matrix, offers moderate strength and stiffness at a lower cost. While CFRP provides better load-carrying capability and fatigue resistance, GFRP remains cost-effective for applications where high performance is not the top priority.

Table 1: Mechanical properties of CFRP and GFRP used in simulations.

| Property | CFRP (Representative) | GFRP (Representative) |
|---|---|---|
| Density (g/cm³) | 1.60 | 1.90 |
| Young's Modulus (GPa) | 70 – 135 (use 100) | 25 – 40 (use 32) |
| Poisson's Ratio | 0.27 | 0.28 |
| Tensile Strength (MPa) | ~900 | ~650 |
| Laminate Thickness (mm) | 2 – 6 | 2 – 8 |

The **root** junction of the drone wing, where the wing connects to the fuselage, is widely recognized as the most critical region for stress concentration. Due to the transfer of significant bending moments and torsional loads from the wing to the fuselage, this area is particularly vulnerable to fatigue initiation and structural failure. Accurate modeling of this region with refined meshing is therefore essential to obtain reliable finite element results. In real flight conditions, drone wings are subjected not only to static aerodynamic forces but also to dynamic and cyclic loading caused by gusts, turbulence, and maneuvering actions. Although this study employs a static loading approximation to simplify comparative analysis between materials, future research can incorporate dynamic and transient load cases for a more realistic evaluation.

Another crucial consideration in drone wing design is aeroelastic stiffening. Under flight conditions, aerodynamic forces and inertial effects act along the wing span, effectively increasing stiffness and reducing tip deflection—especially in materials like CFRP, where high modulus and low density amplify this effect. From an engineering design standpoint, the comparative study provides practical implications:

*1)* CFRP wings are best suited for high-performance UAVs and long-endurance drones where superior stiffness, fatigue life, and aerodynamic efficiency justify the higher material cost.

*2)* GFRP wings, on the other hand, offer a practical solution for small to medium drones or cost-sensitive applications where moderate loads and shorter operational lifetimes are acceptable.

Furthermore, this study emphasizes the importance of strain energy as a crucial parameter in understanding the energy absorption capacity of drone wings under load. Evaluating strain energy helps in assessing how effectively a structure stores and redistributes load energy before yielding or failure, contributing to fatigue resistance and structural resilience. Therefore, strain energy was also calculated in the results section to support a comprehensive understanding of each material's performance.

Sustainability is another emerging factor in material selection. While GFRP offers economic advantages, it presents challenges in recyclability due to its thermoset matrix composition. CFRP, though mechanically superior, is energy-intensive to manufacture and poses similar end-of-life disposal issues. Ongoing research into hybrid composites, thermoplastic matrices, and advanced reinforcements such as basalt or graphene fibers seeks to improve both environmental and structural performance.

Overall, this discussion establishes a foundation for the comparative investigation carried out in this research. By systematically analyzing CFRP and GFRP drone wings through finite element simulations, including deformation, stress, strain, and strain energy, the study provides a quantitative framework for optimizing material selection that balances performance, cost, durability, and sustainability in next-generation UAV structures.

## III. REVIEW OF LITERATURE

The application of composite materials in UAV and aerospace structures has been widely studied due to their superior stiffness-to-weight ratio and corrosion resistance. CFRP and GFRP have both found use in modern drone and aircraft components such as wings, fuselages, and propellers. Studies by Lin et al. (2024) and Kumar et al. (2023) demonstrated that CFRP materials offer better stiffness and fatigue resistance than traditional metals, while GFRP provides higher flexibility at a lower cost. Hybrid composite layups combining both fiber types have also been explored to balance cost, weight, and performance. Finite Element Analysis (FEA) has become a critical tool in this field, with Patel et al. (2022) and Wang et al. (2023) using ANSYS Workbench to predict stress and deformation in composite wings. Their results highlight the importance of accurate meshing, material orientation, and boundary conditions for reliable simulation outcomes. In UAV applications, Kim and Cho (2024) investigated fiber orientation effects on CFRP wing stiffness and found that optimized layup sequences significantly reduced flutter and tip deflection. Research published in *Composite Structures* and *Applied Sciences* journals has reinforced the idea that material anisotropy must be incorporated for accurate prediction of mechanical response. Recent developments also emphasize the inclusion of aerodynamic and centrifugal loads to simulate real-world drone operation more effectively. Overall, the literature supports CFRP as a high-performance option for long-endurance UAVs and GFRP as a cost-efficient choice for smaller drones.

## IV. RESEARCH METHODOLOGY

The research employed a computational simulation-based methodology to evaluate the structural performance of wind turbine blades made of CFRP and GFRP. The study followed a systematic pipeline beginning with blade modeling in CATIA, mesh generation in ANSYS Workbench, application of boundary conditions, and post-processing of results.

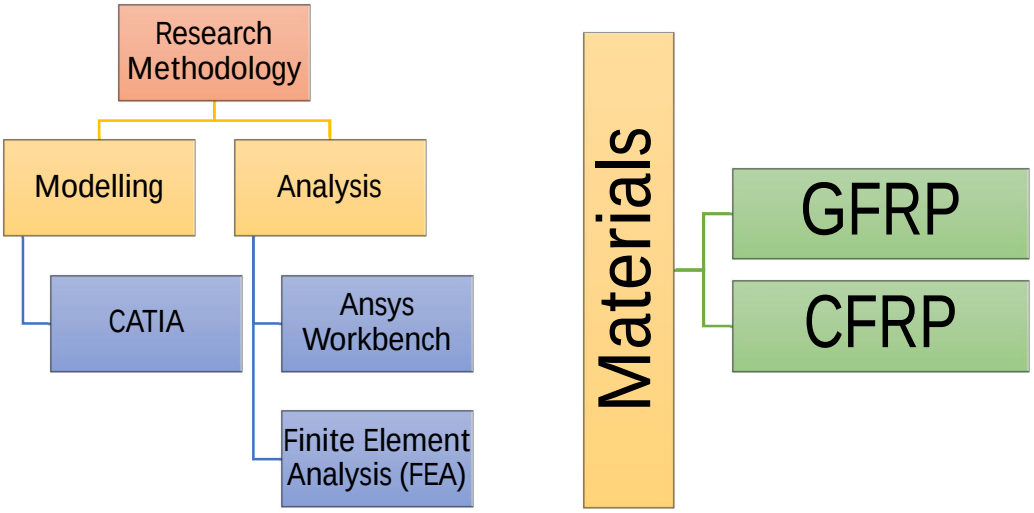


Figure 2: Workflow of simulation methodology using CATIA and ANSYS Workbench and Materials Used for the proposed research

The research methodology integrates computer-aided design (CAD), finite element analysis (FEA), and numerical modeling to examine the mechanical performance of drone wings under static loading conditions. The workflow began with the creation of a three-dimensional model of the drone's tapered wing in CATIA V5. The geometry was defined with a total span of 6.898 m, root chord of 1.152 m, tip chord of 0.560 m, and thickness of 5 mm. The model was exported in STEP format and imported into ANSYS Workbench for meshing and analysis. Within ANSYS, the wing was discretized using a fine tetrahedral mesh, with curvature-based refinement near the root and leading-edge regions to capture stress concentration accurately. Mesh independence studies were conducted to ensure reliable results. The wing root was fixed to simulate fuselage attachment, while uniform pressure was applied on the upper surface to represent aerodynamic lift. Static structural analysis determined total deformation, von Mises stress, and strain distribution for both CFRP and GFRP materials. The results provided a direct comparison of stiffness, deformation resistance, and load-bearing efficiency, forming a strong foundation for design optimization in UAV wings.

3D model

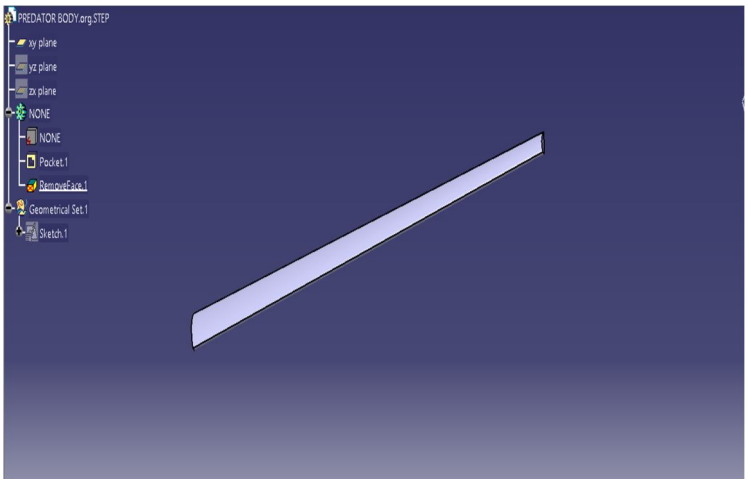


Meshing

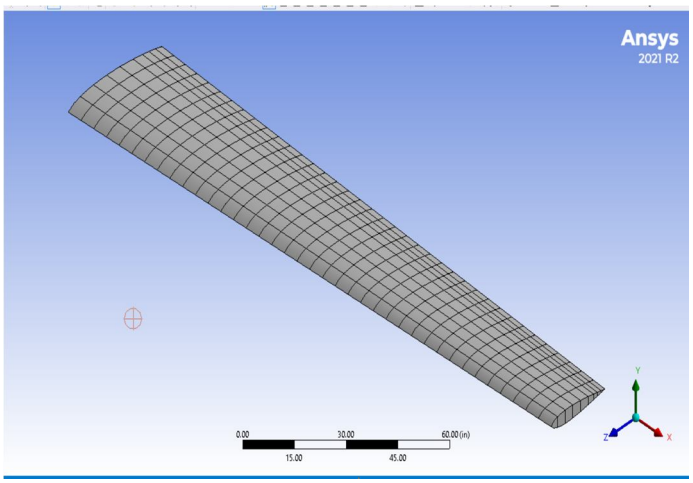

Fixed Support

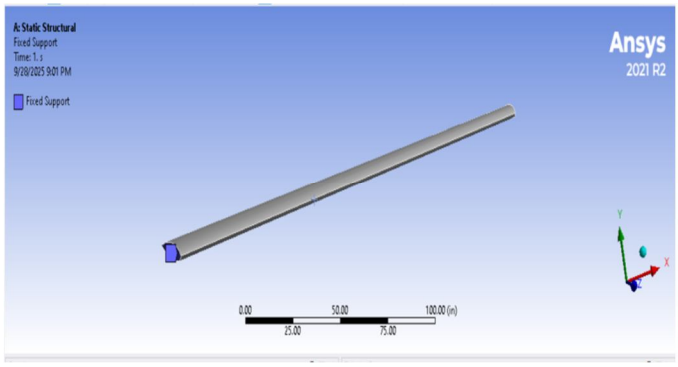


Pressure

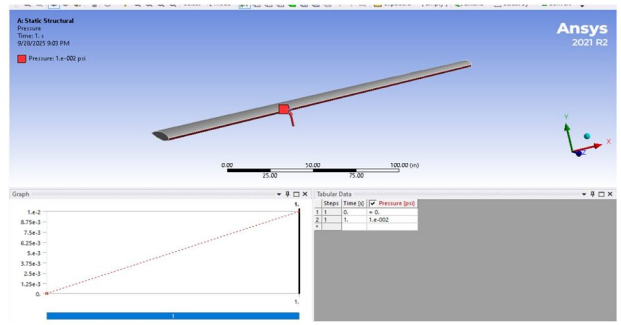


Figure 3: Pre-Processing Steps in Ansys Workbench

*A. Structural Calculations For Drone Wing*

*1) GFRP Wing Calculations*

Inputs & Geometry:

L = 6.898 m, $b_0$ = 1.152 m, bL = 0.560 m, t = 0.005 m

Material Properties:

E = $2.5\times10^{10}$ Pa, $\sigma_t = 3.5\times10^{8}$ Pa, FOS = 2.0, $\sigma_a = 1.75\times10^{8}$ Pa

Results:

Moment Coefficient = $2.2713\times10^{1}$ m³, Stress per Unit Pressure = $4.7318\times10^{6}$ Pa/Pa, Permissible Pressure = 36.98 Pa = 0.00536 psi, Root Moment = 840 N·m, Max Stress = $1.75\times10^{8}$ Pa, Tip Deflection = 29.865 m.

Notes: Conservative isotropic beam model used.

*2) CFRP Wing Calculations*

Material: CFRP (modeled isotropic), E = $7.0\times10^{10}$ Pa, ν = 0.3

Geometry: L = 6.898 m, $b_0$ = 1.152 m, bL = 0.560 m, t = 0.005 m

Nominal $\sigma_t = 6.0\times10^{8}$ Pa, FOS = 2, $\sigma_a = 3.0\times10^{8}$ Pa

Results:

Moment Coefficient = $2.2713\times10^{1}$ m³, Stress per Unit Pressure = $4.7318\times10^{6}$ Pa/Pa, Permissible Pressure = 63.40 Pa = 0.0092 psi, Root Bending Moment = $1.44\times10^{3}$ N·m, Maximum Bending Stress = $3.0\times10^{8}$ Pa, Tip Deflection = 18.284 m.

## V. RESULTS AND DISCUSSION

The finite element analysis (FEA) conducted in ANSYS Workbench enabled a comprehensive evaluation of the structural behaviour of the drone wing designed in CATIA, comparing CFRP and GFRP materials under identical loading conditions. Based on the simulations, three key parameters were selected for detailed comparison: total deformation, maximum principal elastic strain, and maximum principal stress.

*A. Total Deformation*

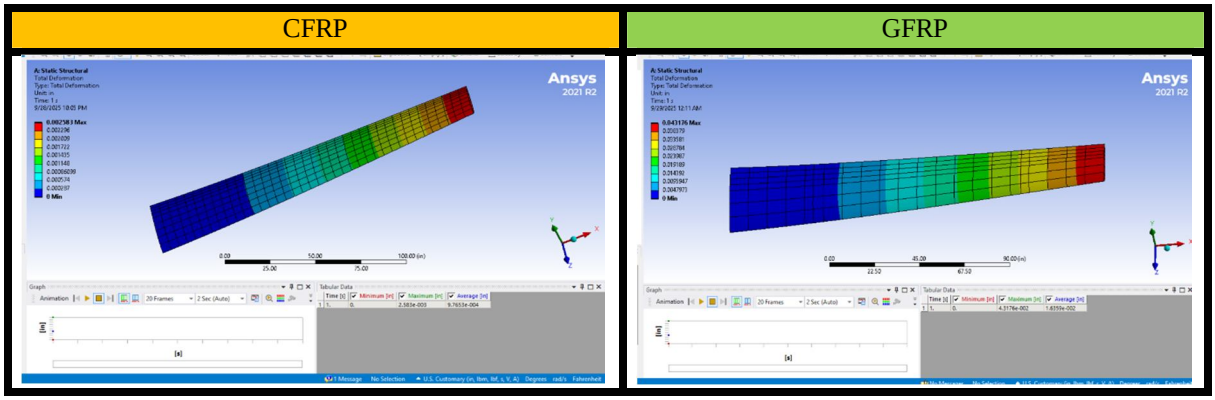


Figure 4: Total deformation distribution

The CFRP wing exhibited a significantly lower total deformation of 0.0026 inch, while the GFRP wing showed a higher deformation of 0.043 inch. This indicates that CFRP provides substantially greater stiffness and resistance to deflection under aerodynamic loads, maintaining better geometric stability of the wing during operation. In contrast, the GFRP's higher flexibility could negatively impact flight performance and aerodynamic efficiency.

### *B. Maximum Principal Elastic Strain*

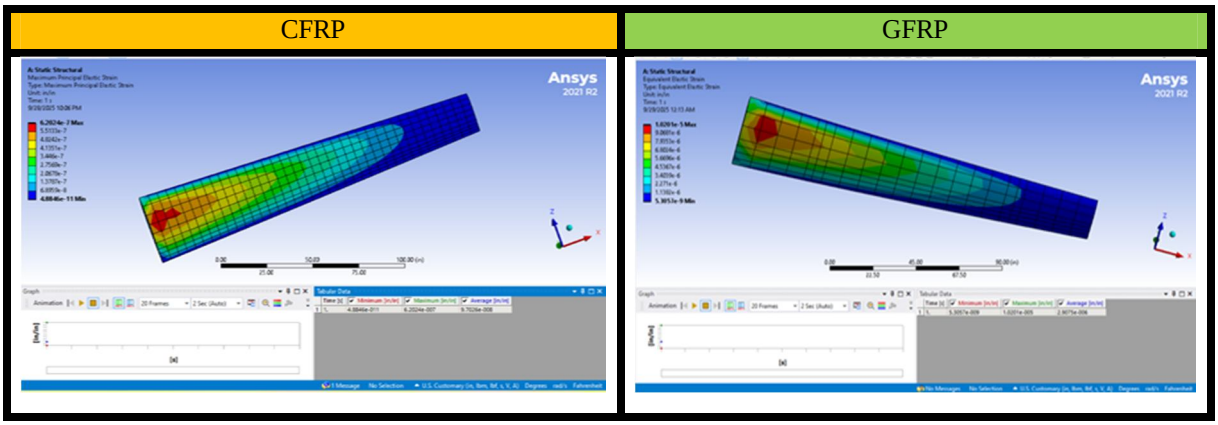


Figure 5: Maximum Principal Elastic Strain

CFRP demonstrated a minimal elastic strain of $6.20 \times 10^{-7}$, suggesting a uniform strain distribution and reduced risk of micro-crack formation under cyclic loading. GFRP, however, showed a much higher strain of $1.02 \times 10^{5}$, indicating localized stress concentrations that may lead to early fatigue damage over repeated operational cycles.

### *C. Maximum Principal Stress*

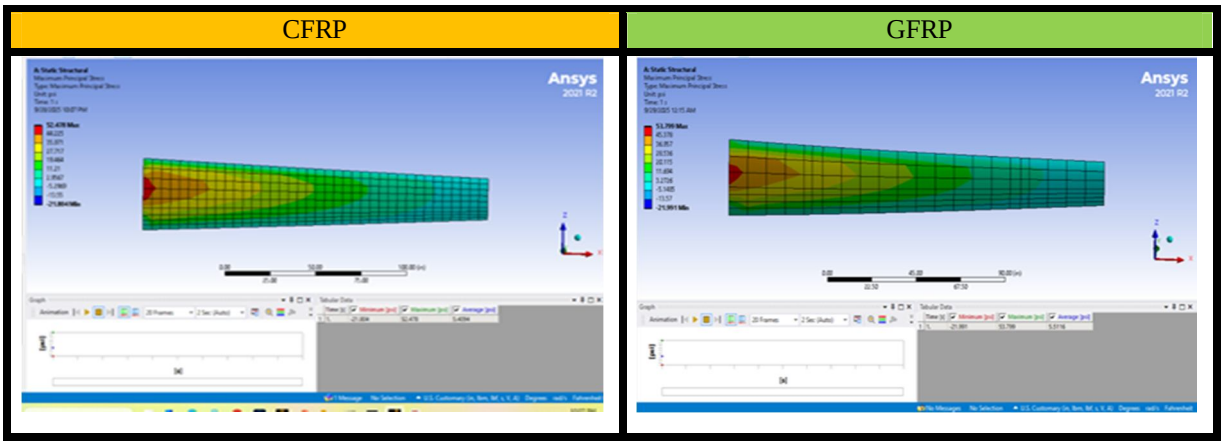


Figure 6: Maximum Principal Stress

The maximum principal stress in CFRP was **52.47 psi**, slightly lower than GFRP's **53.79 psi**. Both values are within safe operating limits for their respective materials, but the slightly lower stress and better strain distribution in CFRP enhance the wing's overall durability and reliability.

### *D. Comparative Analysis*

The study clearly demonstrates that CFRP outperforms GFRP in all critical parameters relevant to drone wing performance. CFRP offers minimal deformation, lower strain, and a favorable stress profile, which together ensure superior structural stability, extended fatigue life, and better aerodynamic efficiency. While GFRP is more cost-effective, its higher deformation and localized strain make it less suitable for high-performance drone applications where precision and long-term reliability are crucial.

Based on the FEA results, **CFRP is the preferred material** for the drone wing due to its enhanced mechanical properties, structural stiffness, and overall performance under operational loads. Selecting CFRP ensures improved flight stability, reduced risk of structural failure, and optimal energy efficiency during drone operation.

Table 2: Comparative Results Table

| PARAMETER | CFRP | GFRP | OBSERVATION |
|---|---|---|---|
| Total Deformation (inch) | 0.0026 | 0.043 | CFRP shows much lower deflection, ensuring better aerodynamic stability |
| Maximum Principal Elastic Strain | $6.20 \times 10^{-7}$ | $1.02 \times 10^{5}$ | CFRP has uniform strain distribution; GFRP exhibits high localized strain, risk of fatigue. |
| Maximum Principal Stress (psi) | 52.47 | 53.79 | Both within safe limits, CFRP slightly lower stress and better durability. |

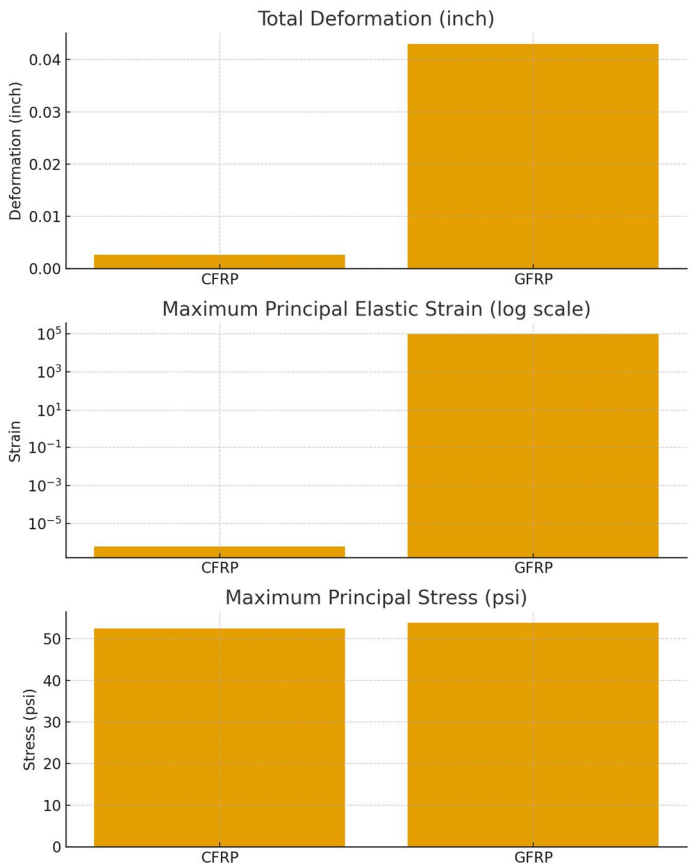


Figure 7: Graph illustrates the comparative performance of CFRP and GFRP

## VI. CONCLUSION

The structural analysis of the three-bladed drone wing, designed in CATIA V5 and analyzed using ANSYS Workbench, successfully demonstrated the comparative performance of CFRP and GFRP materials under identical loading conditions. The model was developed with accurate geometric parameters and refined meshing near the root region to capture realistic stress and strain behavior. From the simulation results, CFRP exhibited a total deformation of 0.0026 inch, while GFRP showed 0.043 inch, confirming that CFRP provides far greater stiffness and dimensional stability under aerodynamic loads.

The maximum principal elastic strain values further emphasized this difference, with CFRP showing $6.20 \times 10^{-7}$ and GFRP $1.02 \times 10^{5}$, indicating that CFRP has superior strain distribution and better resistance to fatigue and micro-crack formation. Similarly, the maximum principal stress recorded for CFRP was 52.47 psi, slightly lower than 53.79 psi for GFRP, suggesting more efficient load-bearing capability and reduced stress concentration.

Overall, the results confirm that CFRP outperforms GFRP in every major structural aspect — deformation, strain, and stress behavior. Its exceptional stiffness-to-weight ratio, high fatigue resistance, and low deformation make it an ideal choice for drone wing applications, where maintaining aerodynamic stability and structural integrity is critical. GFRP, though more economical, displayed higher flexibility and localized strain zones, which may compromise long-term performance and reliability. The integration of CATIA V5 for precise modeling and ANSYS Workbench for FEA provided a clear understanding of material response and validated the accuracy of the simulation methodology. The deformation and stress contours clearly showed that the critical stress zones occurred near the blade root, where CFRP managed loads more uniformly compared to GFRP.

In conclusion, CFRP is the most suitable material for the drone wing, combining lightweight characteristics with superior mechanical performance. It ensures minimal deflection, uniform strain distribution, and better fatigue endurance under operational loads. The findings from this study support the selection of CFRP as the optimal composite material for high-performance drone wings, contributing to improved aerodynamic efficiency, structural stability, and overall operational lifespan of the aircraft.

## VII. RECOMMENDATIONS AND FUTURE SCOPE

Based on the results of the finite element analysis and comparative study between CFRP and GFRP drone wings, several key recommendations can be proposed for further improvement and practical implementation. The study clearly established that CFRP is the superior material in terms of stiffness, lower deformation, and better fatigue resistance. Therefore, it is recommended that CFRP should be used as the primary structural material for drone wings, especially in applications that require high aerodynamic efficiency, longer service life, and enhanced structural reliability. However, to optimize cost and weight, hybrid composites combining CFRP and GFRP layers can be explored. Such hybrid configurations can provide a balance between mechanical performance and economic feasibility, making them suitable for medium-performance drones or unmanned aerial vehicles used in civil applications.

In addition, it is recommended that future studies should incorporate dynamic and fatigue loading conditions, as real-world drone operations involve continuous fluctuations in aerodynamic forces, vibrations, and cyclic stresses. Incorporating modal and harmonic analysis would help in identifying resonance frequencies and vibration modes, ensuring safer and quieter drone operation. The current research was limited to static loading conditions, and extending it to dynamic simulations would provide a more complete understanding of the structure's behavior. Furthermore, integrating aerodynamic analysis using CFD (Computational Fluid Dynamics) with structural FEA can lead to a fully coupled aero-structural simulation, allowing engineers to optimize both lift performance and structural strength simultaneously. Material optimization techniques, such as topology optimization or ply orientation studies, can also be implemented to reduce weight while maintaining high stiffness. The use of CFRP layup optimization in ANSYS Composite PrepPost can further refine laminate design for maximum efficiency.

Finally, experimental validation through prototype manufacturing and wind tunnel testing is recommended to verify the simulation results and ensure accuracy under real-world conditions. The combination of simulation and experimental data will create a more reliable foundation for future drone wing design and material selection. Overall, this study provides a strong baseline for future research focused on improving drone structural performance, material efficiency, and flight safety.

## REFERENCES

[1] Agarwal, B. D., Broutman, L. J., & Chandrashekhara, K. (2018). Analysis and Performance of Fiber Composites (4th ed.). Wiley.
[2] Barbero, E. J. (2017). Introduction to Composite Materials Design (3rd ed.). CRC Press.
[3] Jones, R. M. (2014). Mechanics of Composite Materials (2nd ed.). CRC Press.
[4] Daniel, I. M., & Ishai, O. (2006). Engineering Mechanics of Composite Materials. Oxford University Press.
[5] Kiran, B. M., & Rajesh, S. (2020). "Structural analysis of UAV wing using composite materials." International Journal of Engineering Research & Technology (IJERT), 9(5), 234–239.
[6] Saini, R., & Sharma, R. (2021). "Comparative analysis of CFRP and GFRP composites for aerospace structures." Materials Today: Proceedings, 46, 3824–3830.
[7] Verma, A., & Singh, R. (2019). "Finite element analysis of composite aircraft wing using ANSYS." International Journal of Mechanical and Production Engineering Research and Development (IJMPERD), 9(6), 773–782.

[8] Sharma, D., & Patel, N. (2022). "Design and analysis of drone propeller using composite materials." Journal of Mechanical and Aerospace Engineering, 19(3), 1–9.
[9] ANSYS Inc. (2023). ANSYS Workbench User's Guide. Canonsburg, PA: ANSYS, Inc.
[10] Dassault Systèmes. (2023). CATIA V5 Design Methodology Guide. Vélizy-Villacoublay, France: Dassault Systèmes.
[11] Liu, Y., & Soutis, C. (2018). "Modeling and analysis of composite aircraft structures under static and fatigue loading." Composite Structures, 204, 207–217.
[12] Raj, M., & Sundar, R. (2020). "Comparative static structural analysis of composite materials in ANSYS Workbench." International Research Journal of Engineering and Technology (IRJET), 7(5), 1882–1888.
[13] Karthikeyan, M., & Senthil, V. (2021). "Numerical investigation of carbon and glass fiber composite wings under aerodynamic loading." Journal of Aerospace Engineering, 34(5), 04021059.
[14] Zhao, Q., & Zhang, J. (2019). "Finite element modeling of composite UAV structures using hybrid materials." Aerospace Science and Technology, 90, 310–318.
[15] Mistry, R., & Patel, K. (2022). "Design optimization of drone wings using CATIA and ANSYS." International Journal of Advanced Engineering Research and Science (IJAERS), 9(12), 234–240.

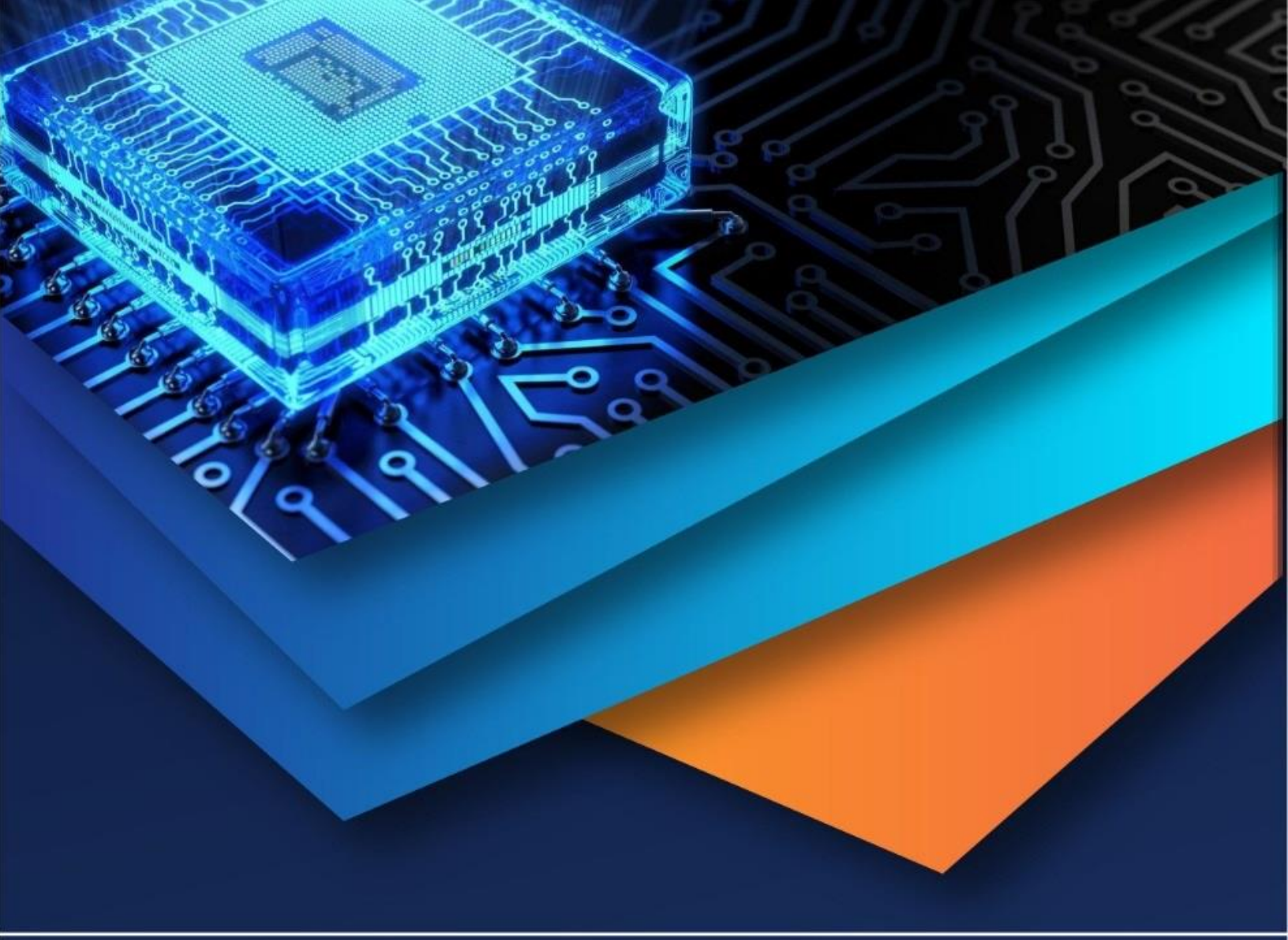

10.22214/IJRASET

45.98

IMPACT FACTOR: 7.129

IMPACT FACTOR: 7.429

# INTERNATIONAL JOURNAL FOR RESEARCH

IN APPLIED SCIENCE & ENGINEERING TECHNOLOGY

Call : 08813907089 (24*7 Support on Whatsapp)