iJRASET
International Journal For Research in Applied Science and Engineering Technology

INTERNATIONAL JOURNAL FOR RESEARCH

IN APPLIED SCIENCE & ENGINEERING TECHNOLOGY

Volume: 6 **Issue:** I **Month of publication:** January 2018

DOI: http://doi.org/10.22214/ijraset.2018.1163

www.ijraset.com

Call: 08813907089 | E-mail ID: ijraset@gmail.com

International Journal for Research in Applied Science & Engineering Technology (IJRASET)
ISSN: 2321-9653; IC Value: 45.98; SJ Impact Factor :6.887
Volume 6 Issue I, January 2018- Available at www.ijraset.com

Survey on Energy Efficient and Throughput Enhancement Routing Protocols over Wireless Mesh Networks

M. A. Archana[1], Dr. C. Parthasarathy[2]
[1]Research scholar, [2]Assistant Professor, Sri Chandrase kharendra Saraswathi Viswa Maha Vidyalaya, [SCSVMV], Kanchipuram, Tamilnadu, India

Abstract: This paper presents an overview of Energy efficient routing protocols that are intended to improve the throughput performance over Wireless Mesh Networks. The accompanying routing protocols depend on vitality efficient and throughput change in mesh network. Here the Dynamic source routing protocol, Intra-zone Routing Protocol (IARP) is used within the routing area to avoid congestion and Inter-zone Routing Protocol (IERP) was used between more than a specified routing areas.
Keywords: Energy, Throughput, AODV, Routing Management, Wireless Mesh Networks

I. INTRODUCTION

A wireless mesh network (WMN) is an accumulation of radio terminals in which every hub transfers information utilizing mesh topology. It is additionally characterized as a sort of wireless ad hoc networks. The engineering of wireless mesh topology contains gateways, switches and mesh clients. The switches are in charge of sending network traffic from or to the gateways which is not important to interface it to the internet. Mobile phones, laptops and different gadgets are considered as mesh clients [1].

For the radio nodes, the scope region is assessed in view of the working region of nodes called mesh cloud. To frame a radio network, the mesh cloud is gotten to just in view of the working between each radio nodes. In mesh network, in the event that one hub is not worked for quite a while then alternate nodes are speak with each other to give repetition and unwavering quality. It might act naturally mend or self-shape on the grounds that the nodes can impart utilizing different nodes or middle of the road nodes. It is conceivable to execute it in all cellular and wireless innovations like 802.15, 802.11, and 802.16 without protocol confinements [2].

In MESH networks, soaring is a well-known idea utilized with steering protocols. The explanation behind utilizing is the need of interfacing internet with broad band get to. It is influenced in the area where legitimate physical association is not given this network. Consequently the costly of developing the network surpasses the real advantages of this mesh network. The ad hoc network gives the imperative idea of protocol steering in WMNs. Contingent upon the aggregate number of nodes and conceivable ways, the metrics based protocols are just utilized as a part of this network. This system does not consider the request of different innovations and execution of connections because of its adequacy. To make inventive steering and for the advancement of existing protocols, the disadvantages and distinctive procedures of metrics are required. The differing number of value measures, for example, security, adaptability, issues in regards to QoS, Efficient utilization of vitality, limit of switches without troubles and diminished reaction time if any progressions happen in topology needs to fulfil for the determination of protocol [3].

II. LITERATURE REVIEW

In WMN, the vitality utilization and throughput usage is considered for the plan of routing protocols. For efficient routing, it ought to guarantee low utilization of vitality with expanded throughput use. The accompanying routing protocols depend on vitality efficient and throughput change in mesh network.

A. AODV (Ad hoc On-Demand Distance Vector)

AODV is a protocol which utilizes separate vector calculation for ad hoc and portable networks. It sets up the way to nodes when it is required. To keep away from correspondence traffic among the nodes on demand calculation is considered. Here the courses are steady till it is required by the source node. To communicate with multicast individuals from the gathering, it makes a tree structure. Succession number is utilized to refresh the course and they are computerized.

©IJRASET (UGC Approved Journal): All Rights are Reserved

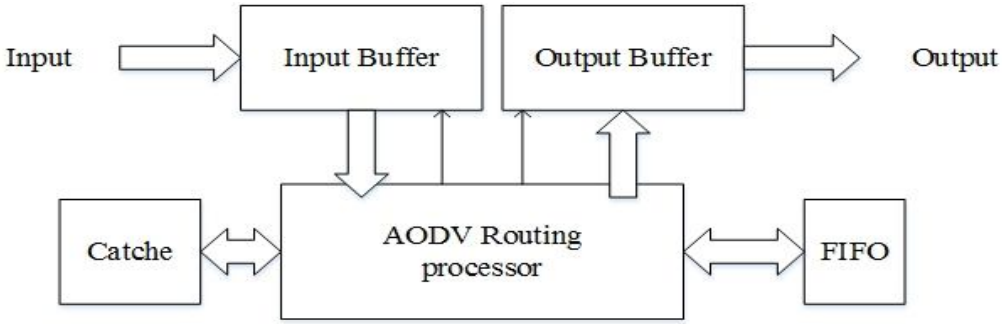

Figure 1: AODV protocol architecture

At the point when a node acquires the routing message, then it quits routing to the current node and send answer to the new node through different courses. The course started by the other node contains the most minimal estimation of bounce number for different nodes. The unused passages of routing table can be utilized after a specific day and age. The blunder message for routing is sent to the source node if node disappointment happens. The design (Figure 1) of AODV routing contains catche, FIFO, catche required for processing. For dealing with the courses; AODV utilizes three sorts of control messages. They are RREP, RERR and RREQ [4-6].

B. B.A.T.M.A.N. (Better Approach to Mobile Adhoc Networking)

The Better Approach to Mobile Adhoc Networking (B.A.T.M.A.N.) is a routing protocol which is reasonable for multi-jump ad hoc networks and it was made to trade existing OLSR. It was produced for the most part for potential utilization of mesh networks. In B.A.T.M.A.N., the aggregate data about the information's routing way is not incorporated. Henceforth it decreases the need of distributing network data to nodes if changes happen. Every node has just the data about the course utilized by the specific node to send and get packets. When sending the packets, transitory courses are made in light of the information goes through the middle of the road nodes. Routing data is kept up by the gathering of networks.

For various routing systems, advanced status of packet routing was built up. Routing table upkeep and UDP packet transmission is maintained a strategic distance from by making a delegate and unmistakable packet transmission by its own. Like other routing protocols, B.A.T.M.A.N. has routing components. Here, best way of packet was dictated by distinguishing different nodes and there courses. It considers each new node and gives data to the neighbors about alternate nodes which are already exists. The transitional PC and routing link was chosen by the administrator of network and professionals in stable network condition. At the point when the network changes always, the undertaking of finding the course was mechanized utilizing diminished investment of thresholds [7].

C. DSDV (Destination-Sequenced Distance-Vector Routing)

The table driven routing plan for mobile ad hoc networks which are used by Destination-Sequenced Distance-Vector Routing (DSDV) depends on Bellman Ford algorithm. The issue of circling is tackled by using this algorithm. Course data and succession number are the sections associated with each routing table.

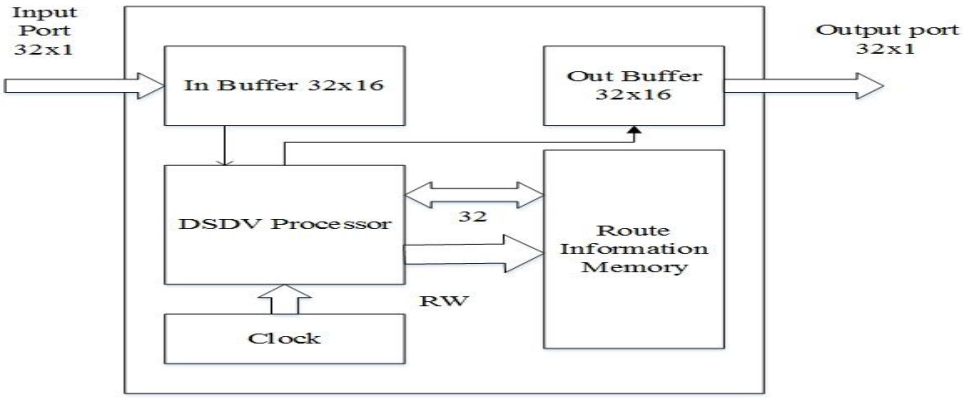

Figure 2: DSDV Architecture

©IJRASET (UGC Approved Journal): All Rights are Reserved

Figure2 denoted the architecture of DSDV. If the network connection is available, it might be accessible and an odd number is utilized for grouping number. For utilizing this number, the emitter send the refresh and the grouping number is produced by the destination node [8].

D. DSR (Dynamic Source Routing)

Dynamic Source Routing (DSR) is a routing tradition for WMN. It resembles AODV in that it outlines a course on-demand when a transmitting hub demands one. Regardless, it uses source routing instead of relying upon the routing table at each halfway gadget. Choosing source courses requires collecting the address of each gadget between the sources and went for course disclosure.

The most ideal way information is put away by hubs preparing the course disclosure packets. The scholarly ways are used to course packets. To complete source routing, the coordinated packets contain the address of each gadget the packet will cross. This may bring about high overhead for long ways or broad areas, as IPv6. To maintain a strategic distance from using source routing, DSR on the other hand portrays an arrangement number decision that licenses packets to be sent on a hop-by-hop commence [9].

This protocol is truly in perspective of source routing whereby all the routing information is kept up at flexible hubs. It has only two important stages, which are Route Discovery and Route Maintenance. Course Reply would simply be created if the message has accomplished the normal objective hub. Course record which is at initially contained in Route Request would be implanted into the Route Reply.

E. OLSR (Optimized Link State Routing protocol)

OLSR is a routing protocol which can be used for wireless ad hoc networks which routes the IP address of the node**.** This is one of the optimized protocols used in mobile networks**.** Hello and TC messages are used by the OLSR protocol for link state routing which is proactive. It detects the information for the status of links using ad hoc and mobile networks. For computing the destination node with next hop, each node uses the topology information for all nodes in the link connection. Shortest hop path can be used to forward the hop information [10].

F. OSPF (Open Shortest Path First Routing)

OSPF routing protocol is used for Internet Protocol network services. It is categorised under the group of interior gateway protocols and it uses link state routing algorithm for detecting the required path. It was operated within a specific autonomous system. This routing protocol is mainly used by IGP of huge network enterprise. The protocol used by large service enterprise provider is Intermediate System to Intermediate System (IS-IS). IS-IS is one of the dynamic routing protocol which uses link state routing. OSPF can be used within a single routing domain of autonomous system which selects route for Internet Protocol (IP) packet routing. OSPF is an interior gateway protocol (IGP) to collect the information of links from the routing table and it develops the network topology for all routes. The routing information is forwarded to the Internet layer from the routing table to route the data packets based on the IP address of destination. Internet Protocol Version 4 (IPv4) and Internet Protocol Version 6 (IPv6) are the network versions supported by OSPF. It can also support for the addressing model of Classless Inter Domain Routing (CIDR) [11].

G. PWRP (Predictive Wireless Routing Protocol)

When covering the larger areas with more than thousands of network terminals, the overhead of network are enhances with increase in number of nodes. For a large network area, minimum two thousand nodes are connected to provide twenty Mbps packet transmission speed. For reducing the burden associated with this the mesh algorithm can be implemented in the network group (figure 3).

©IJRASET (UGC Approved Journal): All Rights are Reserved

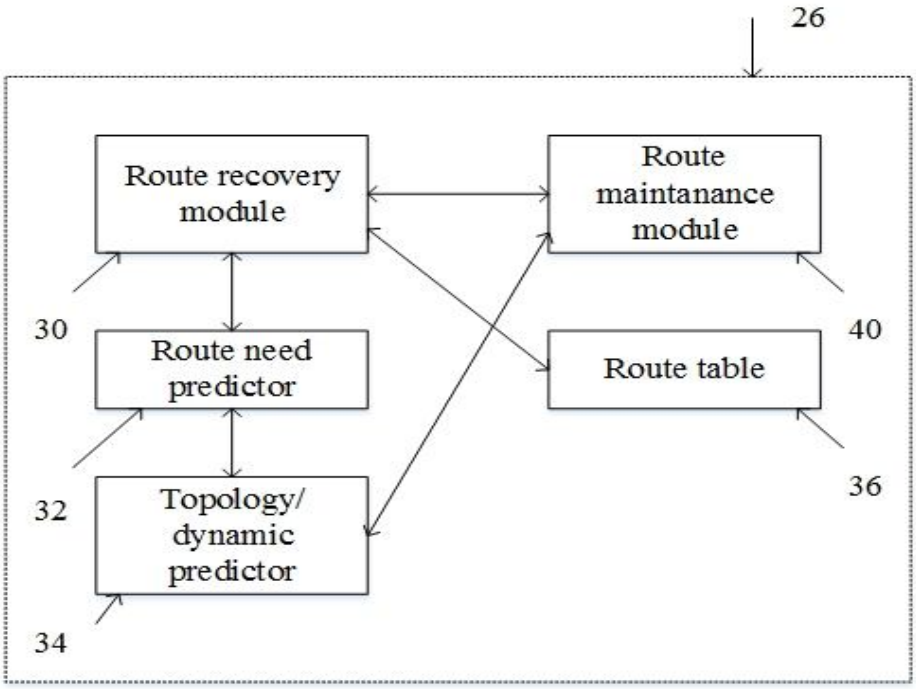

Figure 3 PWRP Architecture

It utilizes the entire network throughput needed for total transmission in 802.11g network. To establish a well-defined and user specified structure of network TropOS wireless service can be used. It has specific routers which uses software implementation with Mesh OS. To enlarge the network coverage area, the small and large networking areas are designed efficiently and which are scalable due to all operations. TropOS are well suited with area having more than thousands of miles [12].

H. TORA (Temporally-Ordered Routing Algorithm)

The Temporally Ordered Routing Algorithm (TORA) is mainly used for data routing in wide variety of Mobile ad hoc network and mesh networks. Park's algorithm is the wireless product developed for routing across various networks. Hierarchical or flat routing algorithms are used by TORA and it gives better scalability among networks. For controlling the propagation of message between various routing algorithms, this algorithm provides highest degree of potential. The solution from the minimal path is not selected by the TORA which is not specific to other routing algorithms [13].

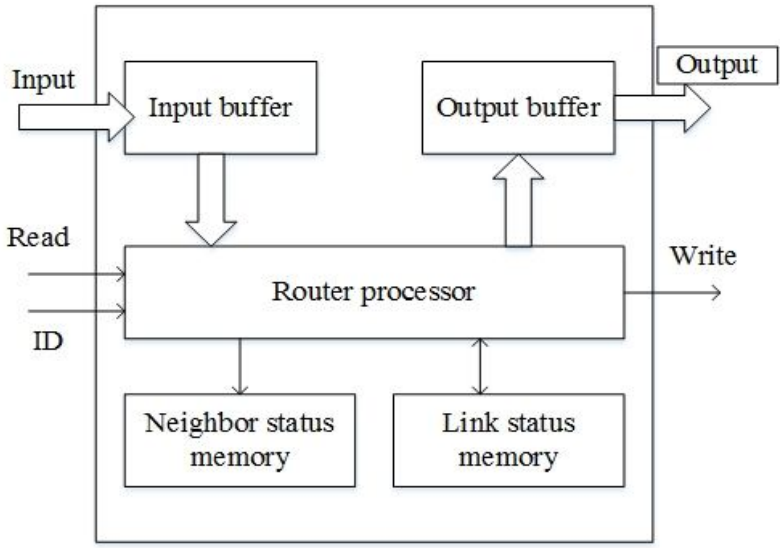

Figure 4: TORA Architecture

©IJRASET (UGC Approved Journal): All Rights are Reserved

Directed Acyclic Graph (DAG) is managed by TORA to root (figure 4) the packet to its destination terminals. The two terminals are not associated with the same length for routing. The information of the data packet goes from the source node to the destination node based on the length of each route. Information about the packets is flooded in the same direction for maintaining the routing state any time. The multi path routing created by TORA is uncyclic. The information never goes to the upper length nodes it causes the information to go back itself. For a node with small set, the controls for messages are localized. It leads to the topological changes with lower number of occurrences. The routing information about the nearest nodes are managed to enforce this routing protocol. There are some basic functions implemented with this protocol [14]

I. ZRP (Zone Routing Protocol)

Both routing protocols like reactive and proactive are used by ZRP or Zone Routing Protocol to transmit the information through the network. To enhance the speed and minimize the computations the efficient protocols are detected from the entire network. If the destination terminal is similar to the source terminal, the packet transmission is enabled by proactive protocol which stores the routing information in a table. For the source node of the packet, the routing is enhanced to the reactive protocol that detects the best routing path for destination. By using these routers the computation overhead was reduced. When the node is selected for routing, the proactive protocol stores the routing information in its table to transmit the data packet. The routing table is responsible for sending the packets which has the same routing information with the source node [15].

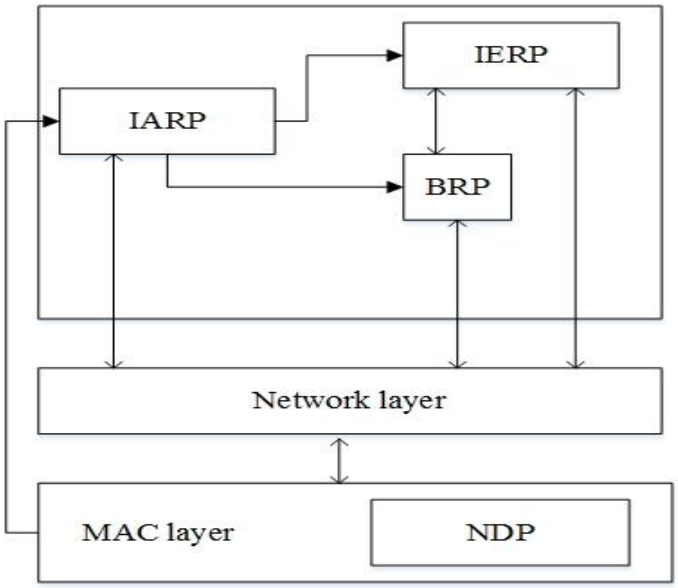

Figure 5: ZRP Architecture

Intra-zone Routing Protocol (IARP) is used within the routing area to avoid congestion and Inter-zone Routing Protocol (IERP) was used between more than a specified routing areas. The routing information is available in the routing table of IARP and which is considered as proactive for routing. In IERP, the route from the source to the destination establishes a network connection between the routing entries with the same routing zone. It is possible to transmit the data immediately if the source and destination is available in the same routing zone. For ZRP (figure 5), the algorithms mainly used for routing is proactive which can be used as a IARP. The nearer of each node is denoted as k and it contains k hops for each node. The routing area is defined around the same node which requires routing. The corner nodes are defined away from the source node which has h number of hops. Reactive discovery of route is requiring if the destination node is not available in the particular routing area. For the corner node, the information needed for routing is forwarded from the source node and it has the address of the source node. It also contains the sequence number for routing. The local information about the node is transferred to the destination. The own address is added to the requested packet for routing with the own address, if destination is not there in the zone. Reply can be received by the route if destination is available in the routing node. For transmitting the data packet to the required node, the source stores the route for the reply packet of the route [16].

©IJRASET (UGC Approved Journal): All Rights are Reserved

III. CONCLUSION

In this paper, we compare the routing protocols that can achieve less energy consumption. We have here discussed that the attainable minimum delay and packet delivery ratio are of important issue to be considered. The different methods of Energy Efficient and Throughput Enhancement Routing Protocols gives us an idea as how to use them for over Wireless Mesh Networks Finally, maximum all the packets from the source will reach at the destination with minimum delay. Quality of service in the entire network is higher.

REFERNCES

[1] Daniel Aguayo, John Bicket, SanjitBiswas, Glenn Judd, and Robert Morris (2004) 'Link-level measurements from an 802.11 b mesh network', ACM, In ACM SIGCOMM Computer Communication Review, Vol 34, no 4, pp 121-132.
[2] Wei Zhang, Zhe Wang, Sajal K. Das, and Mahbub Hassan (2008) 'Security issues in wireless mesh networks', Springer US, In Wireless Mesh Networks, pp 309-330
[3] Sheikh Ferdoush, and Xinrong Li (2014) 'Wireless sensor network system design using Raspberry Pi and Arduino for environmental monitoring applications', Procedia Computer Science, Vol 34, pp 103-110
[4] Ali Moussaoui, FouziSemchedine, and AbdallahBoukerram (2014) 'A link-state QoS routing protocol based on link stability for Mobile Ad hoc Networks', Journal of Network and Computer Applications, Vol 39, pp 117-12
[5] LilianaEncisoQuispe, and Luis Mengual Galan (2014) 'Behavior of Ad Hoc routing protocols, analyzed for emergency and rescue scenarios, on a real urban area', Expert Systems with Applications, Vol 41, no 5, pp 2565-257
[6] SurmukhSingh, and Sunil Agrawal (2014) 'VANET routing protocols: issues and challenges." IEEE, In Recent Advances Engineering and Computational Sciences (RAECS),pp 1-
[7] D. G. Reina, Jose Maria León-Coca, S. L. Toral, EleanaAsimakopoulou, Federico Barrero, Peter Norrington, and NikBessis (2014) 'Multi-objective performance optimization of a probabilistic similarity/dissimilarity-based broadcasting scheme for mobile ad hoc networks in disaster response scenarios', Soft Computing, Vol 18, no 9, PP 1745-1756
[8] Zehua Wang, Yuanzhu Chen, and Cheng Li (2014) 'PSR: A lightweight proactive source routing protocol for mobile ad hoc networks', IEEE transactions on Vehicular Technology, Vol 63, no 2, pp 859-868.
[9] ShubhajeetChatterjee, and Swagatam Das (2015) 'Ant colony optimization based enhanced dynamic source routing algorithm for mobile Ad-hoc network', Information Sciences, Vol 295, pp 67-90.
[10] AshishKots, and Manoj Kumar (2014) 'The fuzzy based QMPR selection for OLSR routing protocol', Wireless networks, Vol 20, no 1, pp 1-10
[11] Stefano Vissicchio, Olivier Tilmans, Laurent Vanbever, and Jennifer Rexford (2015) 'Central control over distributed routing', ACM SIGCOMM Computer Communication Review, Vol 45, no 4, pp 43-56
[12] Faisal KarimShaikh, and SheraliZeadally (2016) 'Energy harvesting in wireless sensor networks: A comprehensive review', Renewable and Sustainable Energy Reviews, Vol 55, pp 1041-1054
[13] Rohini Sharma, and D. K. Lobiyal (2015) 'Proficiency analysis of AODV, DSR and TORA Ad-hoc routing protocols for energy holes problem in wireless sensor networks', Procedia Computer Science, Vol 57, pp 1057-1066
[14] Varun G. Menon, and PM Joe Prathap (2016) 'Opportunistic routing with virtual coordinates to handle communication voids in mobile ad hoc networks', Springer International Publishing, In Advances in Signal Processing and Intelligent Recognition Systems, pp 323-334
[15] G. Ravi, and K. R. Kashwan (2015) 'A new routing protocol for energy efficient mobile applications for ad hoc networks', Computers & Electrical Engineering, Vol 48, pp 77-8
[16] YahyaTashtoush, Omar Darwish, and Mohammad Hayajneh (2014) 'Fibonacci sequence based multipath load balancing approach for mobile ad hoc networks', Ad Hoc Networks, Vol 16, pp 237-246
[17] Wui Lee Chang, Kai Meng Tay, and CheePeng Lim (2017) 'A New Evolving Tree-Based Model with Local Re-learning for Document Clustering and Visualization', Neural Processing Letters, pp 1-31
[18] Francisco J. Rodriguez, Susel Fernandez, Ines Sanz, Miguel Moranchel, and Emilio J. Bueno (2016) 'Distributed approach for smart grids reconfiguration based on the OSPF routing protocol', IEEE Transactions on Industrial Informatics, Vol 12, no 2, pp 864-871.
[19] Varun G. Menon, and PM Joe Prathap (2016) 'Opportunistic routing with virtual coordinates to handle communication voids in mobile ad hoc networks', Springer International Publishing, In Advances in Signal Processing and Intelligent Recognition Systems, pp 323-334.

©IJRASET (UGC Approved Journal): All Rights are Reserved

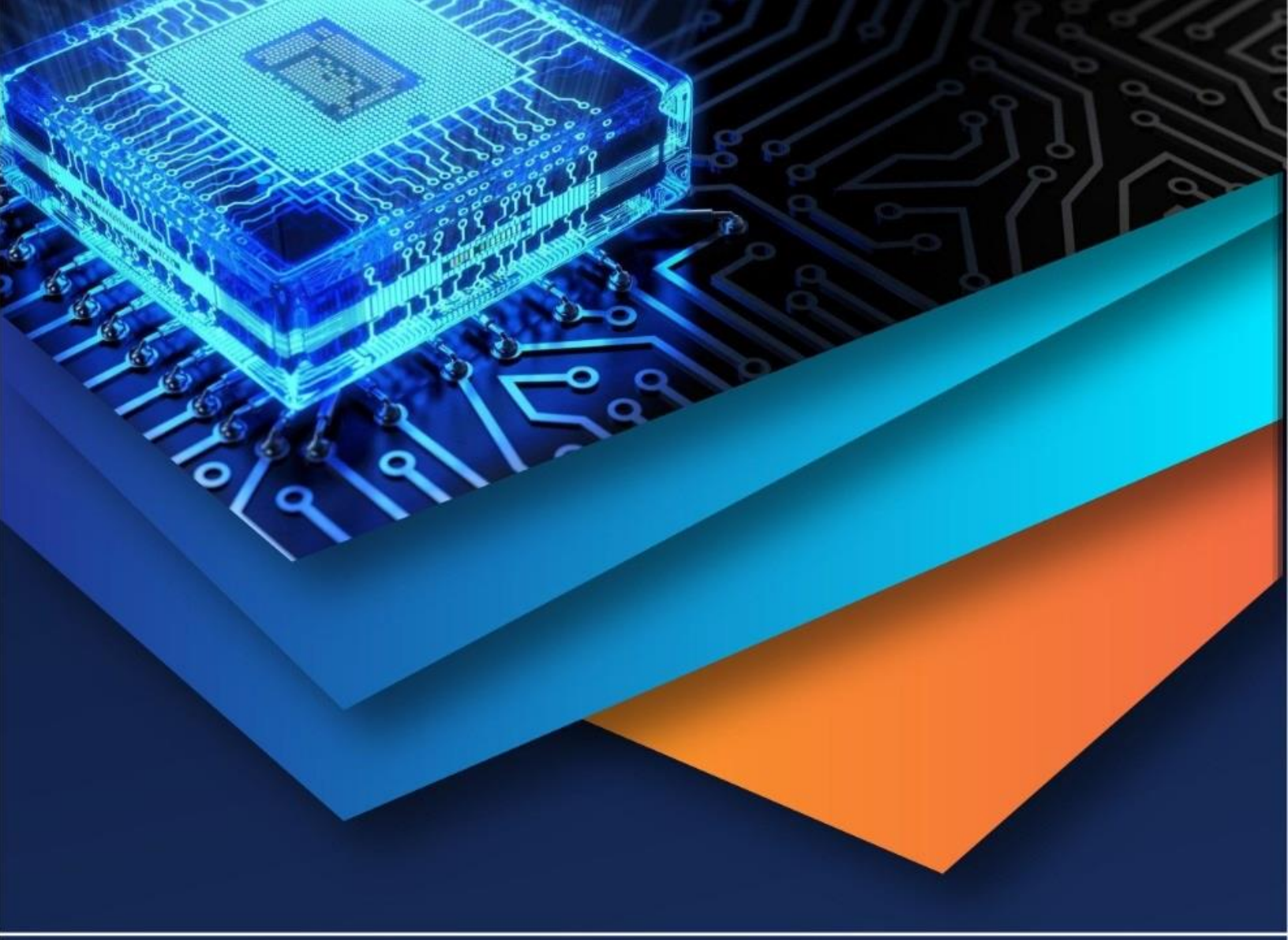

10.22214/IJRASET

45.98

IMPACT FACTOR: 7.129

IMPACT FACTOR: 7.429

INTERNATIONAL JOURNAL FOR RESEARCH

IN APPLIED SCIENCE & ENGINEERING TECHNOLOGY

Call : 08813907089 (24*7 Support on Whatsapp)