iJRASET
International Journal For Research in Applied Science and Engineering Technology

INTERNATIONAL JOURNAL FOR RESEARCH

IN APPLIED SCIENCE & ENGINEERING TECHNOLOGY

Volume: 6 **Issue:** II **Month of publication:** February 2018

DOI: http://doi.org/10.22214/ijraset.2018.2081

www.ijraset.com

Call: 08813907089 | E-mail ID: ijraset@gmail.com

International Journal for Research in Applied Science & Engineering Technology (IJRASET)
ISSN: 2321-9653; IC Value: 45.98; SJ Impact Factor: 6.887
Volume 6 Issue II, February 2018- Available at www.ijraset.com

Analysis and Design of High Order Discrete Time Interval Systems using New Order Reduction Technique via Least Squares Method and Time Moments Technique

Kiran Kumar Kalyana[1], Sangeeta Kurman[2]
[1,2]*Department of EEE, Department of CSE Aditya Institute of Technology and Management, Tekkali, Andhra Pradesh*

Abstract: This paper presents the analysis and design of high order discrete time Interval system using order reduction via Least Squares method and time moment's technique. The reduced order interval model retains the Time moments and Markov parameters of original high order discrete interval system. The proposed method preserves stability in the reduced discrete interval models when the given original discrete high order interval system is stable. The proposed order reduction method is extended for the design of compensators to achieve dead beat response of the original high order discrete time interval system with less computational effort making use of reduce order model. The new method demonstrated through numerical examples.
Keywords: Interval systems, discrete systems, compensator design, least squares method, dead beat compensator.

I. INTRODUCTION

In general while modelling most of the practical systems are of high order with uncertain system parameters such systems are called high order interval systems. Analysis, synthesis, simulation and design of such systems are tedious and warrant the process of reducing this high order interval system into a low order interval model. The earlier methods available in the literature may be found simple but faces a drawback of generating unstable reduced interval models for stable high order interval systems.

The paper here presents the analysis and design of large scale discrete time interval systems via least squares method and time moment technique. The new approach uses least squares method to generate reduced denominator and moment matching technique to generate reduced numerator.

This approach preserves stability in the reduced discrete interval models and their transient and steady state responses have good approximations with the original system response curve. The proposed method has the flexibility to extend the usage of no of time moments and markov parameters to improve the quality of its approximation.

The generated discrete reduced model by the proposed method can be effectively used to design the dead beat compensator to save much computational effort. The new method is illustrated through numerical examples.

II. GENERALISED PROPOSED REDUCTION TECHNIQUE

Considering the transfer function of an nth order discrete time interval system be denoted as

$$H(z) = \frac{[u_0^-, u_0^+]+[u_1^-, u_1^+]z+\cdots+[u_{n-1}^-, u_{n-1}^+]z^{n-1}}{[v_0^-, v_0^+]+[v_1^-, v_1^+]z+\cdots+[v_n^-, v_n^+]z^n} \quad (1)$$

here, $[u_j^-, u_j^+]$ represents numerator interval coefficients for j = 0 to n-1 and $[v_i^-, v_i^+]$ represents the denominator interval coefficients for i = 0 to n

Considering the transfer function of an r_{th} order discrete time interval system be denoted as

$$R(z) = \frac{[x_0^-, x_0^+] + [x_1^-, x_1^+]z + \cdots + [x_{r-1}^-, x_{r-1}^+]z^{r-1}}{[y_0^-, y_0^+] + [y_1^-, y_1^+]z + \cdots + [y_r^-, y_r^+]z^r}$$

Here r< n and 'n' is positive integer

Apply bilinear transformation $z=\frac{1+w}{1-w}$ separately to numerator and denominator of the above equation to transform the nth discrete high order interval system from z-plane to w-plane as follows:

$$H(w) = \frac{[a_0^-, a_0^+]+[a_1^-, a_1^+]w+\cdots+[a_{n-1}^-, a_{n-1}^+]w^{n-1}}{[b_0^-, b_0^+]+[b_1^-, b_1^+]w+\cdots+[b_n^-, b_n^+]w^n} \quad (2)$$

©IJRASET (UGC Approved Journal): All Rights are Reserved

Where $[a_j^-, a_j^+]$signify numerator interval coefficients for j = 0 to n-1 and $[b_i^-, b_i^+]$ signify the denominator interval coefficients for j = 0 to n in w-plane.

Preserving the stability of H(w),the high order original interval system H(w),can be split into four fixed nth order transfer functions using Kharitonov's theorem. This can be generalized as follows:

$$G_P(w) = \frac{A_{P0}+A_{P1}w+A_{P2}w^2+\cdots+A_{Pn-1}w^{n-1}}{B_{P0}+B_{P1}w+B_{P2}w^2+\cdots+B_{pn}w^n} \quad (3)$$

Here p=1, 2, 3, 4.and n = order of the Gp (w).
Substitute the G_p (w) by G_p (w+a).By using the harmonic mean the value of 'a' can be determined as

$$\frac{1}{a} = \frac{\sum_{i=1}^{n}\left[\frac{1}{|K_{pi}|}\right]}{n} \quad (4)$$

Where K_{pi} are the real parts of the poles of G_p (w) and p=1, 2,3and 4. By expanding G_p (w+a) about w=0, the shifted time moments c_{pl} are found by

$$G_p(w+a) = \sum_{l=0}^{\infty} C_{pl}w^l \quad (5)$$

Similarly, by expanding G_p (w+a) about w=∞, then the shifted Markov parameters m_{pj} are obtained by:

$$G_p(w+a) = \sum_{j=1}^{\infty} m_{Pj}w^{-j} \quad (6)$$

Let the generalized r^{th} order shifted lower order model can defined as

$$R_{pr}(w+a) = \frac{d_{p0}+d_{p1}w+d_{p2}w^2+\cdots+d_{pr-1}w^{r-1}}{e_{p0}+e_{p1}w+e_{p2}w^2+\cdots+e_{pr}w^r} \quad (7)$$

The above mentioned eqns. (5) and (7) are equated to preserve the time moments of the original system G_P (w+a), subsequently set of equations are as follows

$$\begin{bmatrix} c_{pr} & c_{pr-1} & \cdots & c_{p1} \\ c_{pr+1} & c_{pr} & \cdots & c_{p2} \\ \cdots & \cdots & \cdots & \cdots \\ \cdots & \cdots & \cdots & \cdots \\ c_{p2r-1} & c_{p2r-2} & \cdots & c_{pr} \end{bmatrix} * \begin{bmatrix} e_{p0} \\ e_{p1} \\ \cdot \\ \cdot \\ e_{pr-1} \end{bmatrix} = \begin{bmatrix} -c_{p0} \\ -c_{p1} \\ \cdot \\ \cdot \\ -c_{pr-1} \end{bmatrix} \quad (8)$$

The eqn. (8) can also be written as H e = c, in matrix vector form. The successive parameters of matrix vector 'e' of the shifted reduced denominator estimated by least squares technique.

$$e = (H^T H)^{-1\,T} c \quad (9)$$

If the reduced shifted denominator obtained by the coefficients of vector 'e' do not make up a stable polynomial then it is suggested to add another row as shown below to the equation set mentioned in the eqn.(8) and ensure the matching of the next time moment of the original shifted system.

$$[c_{p2r}c_{p2r-1}\ldots c_{pr+1}] \text{and } [-c_{pr}] \quad (10)$$

Repeat the above procedure till we achieve a satisfactory and stable shifted reduced denominator and ensure the matching of time moments of the shifted original system.
In order to improve the initial transient approximation of a system response, incorporate Markov parameters in the least square method, as follows

©IJRASET (UGC Approved Journal): All Rights are Reserved

$$\left.\begin{aligned} d_{p0} &= e_{p0}c_{p0} \\ d_{p1} &= e_{p1}c_{p0} + e_{p0}c_{p1} \\ d_{p2} &= e_{p2}c_{p0} + e_{p1}c_{p1} + e_{p0}c_{p2} \\ &\vdots \\ d_{pr-1} &= e_{pr-1}c_{p0} + \cdots + e_{p0}c_{pr-1} \\ 0 &= e_{pr-1}c_{p1} + \cdots + e_{p0}c_{pr} \\ 0 &= e_{pr-1}c_{p2} + \cdots + e_{p0}c_{pr+1} \\ &\vdots \\ 0 &= e_{pr-1}c_{pt} + \cdots + e_{p0}c_{pr+t-1} \end{aligned}\right\} \quad (11)$$

And

$$\left.\begin{aligned} d_{pr-1} &= m_{p1} \\ d_{pr-2} &= m_{p1}e_{pr-1} + m_{p2} \\ &\vdots \\ d_{pt} &= m_{p1}e_{pt+1} + m_{p2}e_{pt+2} + \cdots + m_{pr-t} \end{aligned}\right\} (12)$$

Where the c_{pj} are the time moment coefficients and m_{pk} are the markov parameters of the system. such that j=(0,1,…..r+t) and k=(1,2,…..r-t) where $t = 0 \le t \le r$ respectively. By equating eqns. (12) and (11), we can eliminate d_{pr-1}, d_{pr-2}, d_{pr-3},…d_{pt} and this gives the coefficients of the reduced shifted denominator in its matrix form as

$$\begin{bmatrix} c_{pr+t-1} & c_{pr+t-2} & \cdots & \cdots & \cdots & \cdots & c_{pt} \\ c_{pr+t-2} & c_{pr+t-3} & \cdots & \cdots & \cdots & c_{pt} & c_{pt-1} \\ \cdots & \cdots & \cdots & \cdots & \cdots & \cdots & \cdots \\ c_{pr-1} & c_{pr-2} & \cdots & \cdots & \cdots & c_{p1} & c_{p0} \\ c_{pr-2} & c_{pr-3} & \cdots & \cdots & \cdots & c_{p0} & -m_{p1} \\ c_{pr-3} & c_{pr-4} & \cdots & \cdots & c_{p0} & -m_{p1} & -m_{p2} \\ \vdots & \vdots & \cdots & \vdots & \vdots & \vdots & \vdots \\ c_{pt} & c_{pt-1} & \cdots & c_{p0} & -m_{p1} & \cdots & -m_{pr-t-1} \end{bmatrix} * \begin{bmatrix} e_{p0} \\ e_{p1} \\ \vdots \\ e_{pr-1} \end{bmatrix} = \begin{bmatrix} 0 \\ 0 \\ \vdots \\ m_{p1} \\ m_{p2} \\ m_{p3} \\ m_{p4} \\ \vdots \\ m_{pr-t} \end{bmatrix} (13)$$

The above equation can be written as H e = m in matrix vector form and 'e' can be estimated by

$$e = (H^T H)^{-1} H^T m \qquad (14)$$

If the reduced shifted denominator obtained by the coefficients of vector 'e' do not make up a stable polynomial then it is suggested to add another row as shown below to the equation set mentioned in the eqn.(14) and ensure the matching of the next shifted markov parameter of the original shifted system in Least Squares equivalent. Now apply the inverse shift w → (w-a) to the obtained shifted lower order denominator polynomial, from vector 'e'. Thus r^{th} order reduced model obtained as

$$D_{pr}(w) = E_{p0} + E_{p1}w + E_{p2}w^2 + \cdots + w^r$$

Where p= 1,2,3,4 and r = 1, 2, 3….n-1

Later, using equation

$$C_{pi} = \frac{1}{B_{p0}}[A_{pi} - \sum_{j=1}^{i} B_{pj}C_{pi-j}] (15)$$

$$i>0 \text{ with } A_{pi} = 0 \text{ for } i > n-1 \text{ and } p=1, 2, 3, 4$$

The numerator of the reduced model

$$N_{pr}(w) = D_{p0} + D_{p1}w + D_{p2}w^2 + \cdots + D_{pr-1}w^{r-1}$$

Where p=1, 2, 3, 4 and r =1, 2, 3….n-1

Then the corresponding r^{th} order reduced models with fixed coeffcients are defined as $R_{pr}(w) = \frac{N_{pr}(w)}{D_{pr}(w)}$

$$R_{pr}(w) = \frac{D_{p0} + D_{p1}w + D_{p2}w^2 + \cdots + D_{pr-1}w^{r-1}}{E_{p0} + E_{p1}w + E_{p2}w^2 + \cdots + w^r}$$

Where p = 1,2,3,4 and r = 1,2,3,…..n-1 such that the reduced Interval model is obtained from the minimum and maximum values of four fixed coefficient transfer functions thus it can represented as

$$R(w) = \frac{[D_{pomin}, D_{pomax}] + [D_{p1min}, D_{p1max}]w + \cdots + [D_{pr-1min}, D_{pr-1max}]w^{r-1}}{[E_{pomin}, E_{pomax}] + [E_{p1min}, E_{p1max}]w + \cdots + [1,1]w^r}$$

On applying inverse bilinear transformation w=(z-1)/(z+1)separately to numerator and denominator of R (w) the discrete reduced interval model R (z) can be determined.

To match the steady state step responses of lower boundary and upper boundary of original discrete interval system with discrete reduced interval model they are separately multiplied with their individual gain parameters considering z=1.

III. COMPENSATOR DESIGN

The reduced discrete interval model R (z) obtained by the proposed method can be effectively used to design the dead beat compensator to save much computational effort.

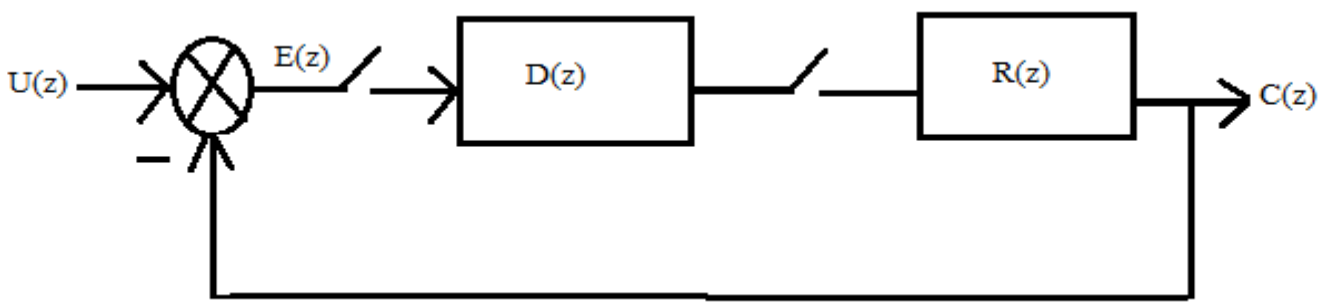

U(z)→ unit step input

D(z)→A compensator required to design to obtain dead beat performance

R(z)→Reduced model

E(z)→ U(z)-R(z)

T(z)→Overall closed loop pulse transfer function

The system must possess a finite settling time which require that E(z) be a finite polynomial in z-1 so that the error becomes zero after a finite number of sampling instants. The system must respond as fast as possible when subjected to an input which requires that E(z) must be a polynomial of minimum possible degree .Considering the model R(z) to have a transportation lag of one unit implies that the system takes at least one sampling interval to respond hence forcing the error to zero instantaneously is not possible and we require at least one sampling interval such that the error is unity at t=0 and is zero during the subsequent sampling intervals.

IV. NUMERICAL EXAMPLES

Let us now discuss some examples on determination of reduced interval models and designing of dead beat compensator.

Example 4.1: Consider a stable 3rd order original discrete time interval system given below:

$$H(z) = \frac{[3.15,3.45]z^2 + [3.4,3.55]z + [2.6,3]}{[5.3,5.6]z^3 + [1.1,1.2]z^2 + [1.3,1.6]z + [2.2,2.25]}$$

Applying the proposed order reduction method, the Second order reduced interval model is obtained using four time moments to the denominator and two time moments to the numerator with a_1=0.249356 a_2=0.317510, a_3=0.256346 and a_4=0.332668 is as follows:

$$R(z) = \frac{[0.99904903, 1.288391867]z + [0.3419741921, 0.806846054]}{[1.863411, 2.094218]z^2 + [-1.238164, -0.920198]z + [0.826601, 1.057408]}$$

©IJRASET (UGC Approved Journal): All Rights are Reserved

Considering the Lower Boundary the transfer function of original system with fixed parameters is

$$H_{ol}(z) = \frac{3.15z^2 + 3.4z + 2.6}{5.3z^3 + 1.1z^2 + 1.3z + 2.2}$$

Applying the proposed order reduction method, the Lower Boundary Second order reduced model is obtained as

$$Rol(z) = \frac{0.99904903z + 0.3419741921}{1.863411z^2 - 1.238164z + 0.526601}$$

Compensator designIt is required to achieve time response of compensated system with dead beat performance.
The dead beat Compensator D_{ol} (z) obtained using the reduced order model is

$$Dol(z) = \frac{1.863411z^2 - 1.238164z + 0.826600}{0.999049z^2 - 0.657075z - 0.341974}$$

The compensated system of reduced order model has a closed loop transfer function of

$$R_{Dol}(z) = \frac{1.862z^3 - 0.5997z^2 + 0.4024z + 0.2827}{1.862z^4 - 0.599z^3 + 0.4023z^2 + 0.2827z}$$

The step response of an uncompensated original high order discrete system and compensated system using reduced discrete order model are compared in Fig4.1a

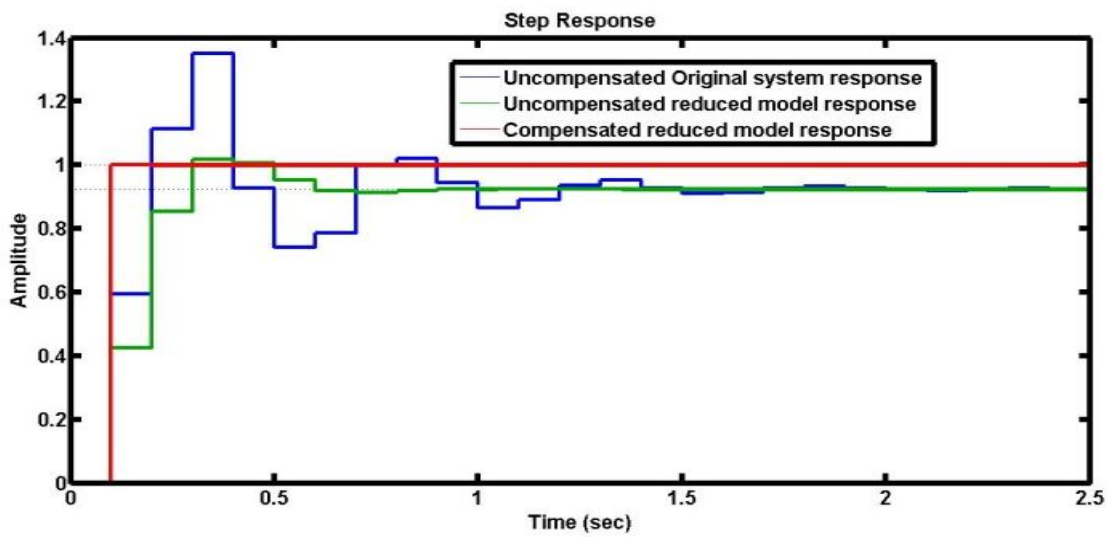

Fig4.1a Lower Boundary Response

Considering the Upper Boundary the transfer function of original system with fixed parameters is

Applying the proposed order reduction method, the Upper Boundary Second order reduced model is obtained as

$$Roh(z) = \frac{1.288391867z + 0.806846054}{2.094218z^2 - 0.920198z + 1.057408}$$

The dead beat Compensator D_{oh} (z) obtained using the reduced order model is

$$Doh(z) = \frac{2.094218z^2 - 0.920198z + 1.057408}{1.288392z^2 - 0.481546z - 0.806846}$$

The compensated system of reduced order model has a closed loop transfer function of

$$R_{Doh}(z) = \frac{2.698z^3 + 0.5401z^2 + 0.6199z + 0.8532}{2.698z^4 + 0.504z^3 + 0.6559z^2 + 0.8532z}$$

The step response of an uncompensated original high order discrete system and compensated system using reduced discrete order model are compared in Fig4.1b

©IJRASET (UGC Approved Journal): All Rights are Reserved

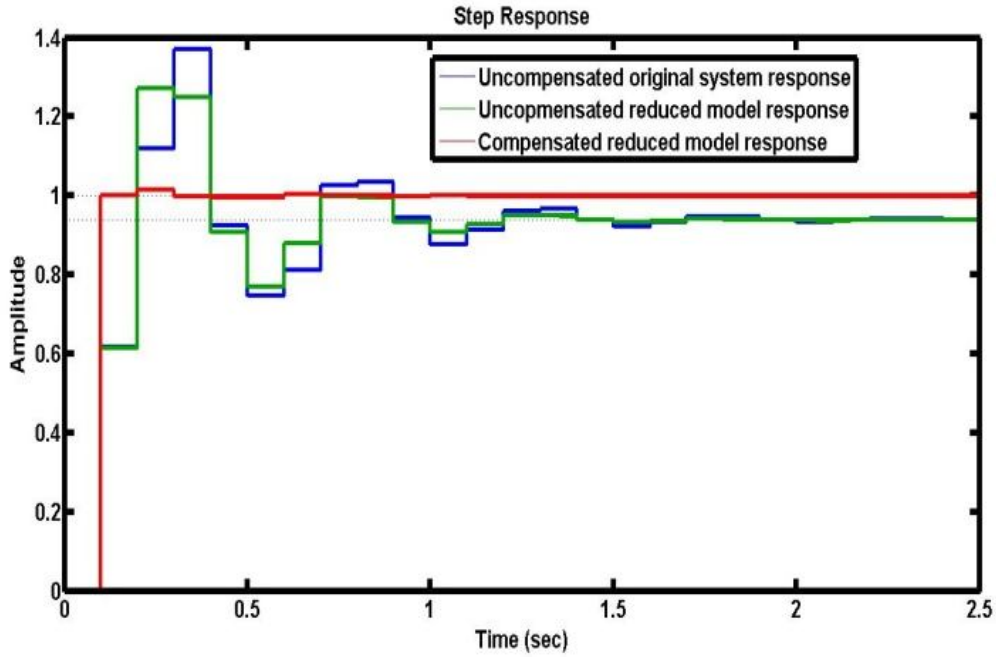

Fig4.1b Upper Boundary Response

Example 4.2: Consider a stable 5th order original discrete time interval system given below:

$$H(z) = \frac{[2.3,2.55]z^4 + [2.45,2.65]z^3 + [3.25,3.35]z^2 + [2.5,2.65]z + [1.8,2.2]}{[8.3,8.35]z^5 + [4.6,4.8]z^4 + [2.4,2.5]z^3 + [2,2.2]z^2 + [1.5,1.8]z + [2.1,2.15]}$$

Applying the proposed order reduction method, the Second order reduced discrete interval model is using six time moments to the denominator and two time moments to the numerator with the values of
a_1=0.318421, a_2=0.328438, a_3=0.317856 and a_4=0.327626 is as follows

$$R(z) = \frac{[0.313387754,0.372838513]z + [0.100417026,0.265096762}{[1.596747,1.714661]z^2 + [-1.614006,-1.515346]z + [0.720663,0.83852]}$$

Considering the lower boundary the transfer function of original system with fixed parameters is

$$H_{ol}(z) = \frac{2.3z^4 + 2.45z^3 + 3.25z^2 + 2.5z + 1.8}{8.3z^5 + 4.6z^4 + 2.4z^3 + 2z^2 + 1.5z + 2.1}$$

Applying the proposed order reduction method, the Lower Boundary Second order reduced model is obtained as

$$R_{ol}(z) = \frac{0.313387754z + 0.100417026}{1.596747z^2 - 1.614006z + 0.720663}$$

Compensator designIt is required to achieve time response of compensated system with dead beat performance.
The dead beat Compensator $D_{ol}(z)$ obtained using the reduced order model is

$$D_{ol}(z) = \frac{1.596747z^2 - 1.614006z + 0.720663}{0.313388z^2 - 0.21297z - 0.100417}$$

The compensated system of reduced order model has a closed loop transfer function of

$$R_{Dol}(z) = \frac{0.5004z^3 - 0.3455z^2 + 0.06377z + 0.07237}{0.5004z^4 - 0.3455z^3 + 0.0637z^2 + 0.07236z}$$

The step response of an uncompensated original high order discrete system and compensated system using reduced discrete order model are compared in Fig4.2a

©IJRASET (UGC Approved Journal): All Rights are Reserved

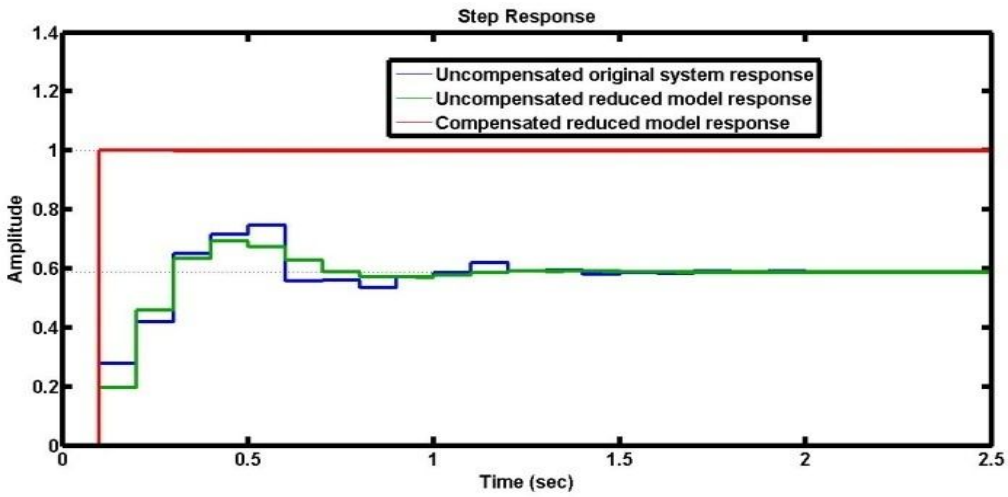

Fig4.2a Lower Boundary Response

Considering the Upper boundary the transfer function of original system with fixed parameters is

$$H(z) = \frac{2.55z^4 + 2.65z^3 + 3.35z^2 + 2.65z + 2.2}{8.35z^5 + 4.8z^4 + 2.5z^3 + 2.2z^2 + 1.8z + 2.15}$$

Applying the proposed order reduction method, the Upper Boundary Second order reduced model is obtained as

$$R(z) = \frac{0.372838513z + 0.265096762}{1.714661z^2 - 1.515346z + 0.83852}$$

The dead beat Compensator D_{oh} (z) obtained using the reduced order model is

$$D_{oh}(z) = \frac{1.714661z^2 - 1.515346z + 0.838520}{0.372839z^2 - 0.107742z - 0.265097}$$

The compensated system of reduced order model has a closed loop transfer function of

$$R_{Doh}(z) = \frac{0.6393z^3 - 0.1104z^2 - 0.08908z + 0.2223}{0.6393z^4 - 0.1104z^3 - 0.08905z^2 + 0.22232z}$$

The step response of an uncompensated original high order discrete system and compensated system using reduced discrete order model are compared in Fig.4.2b

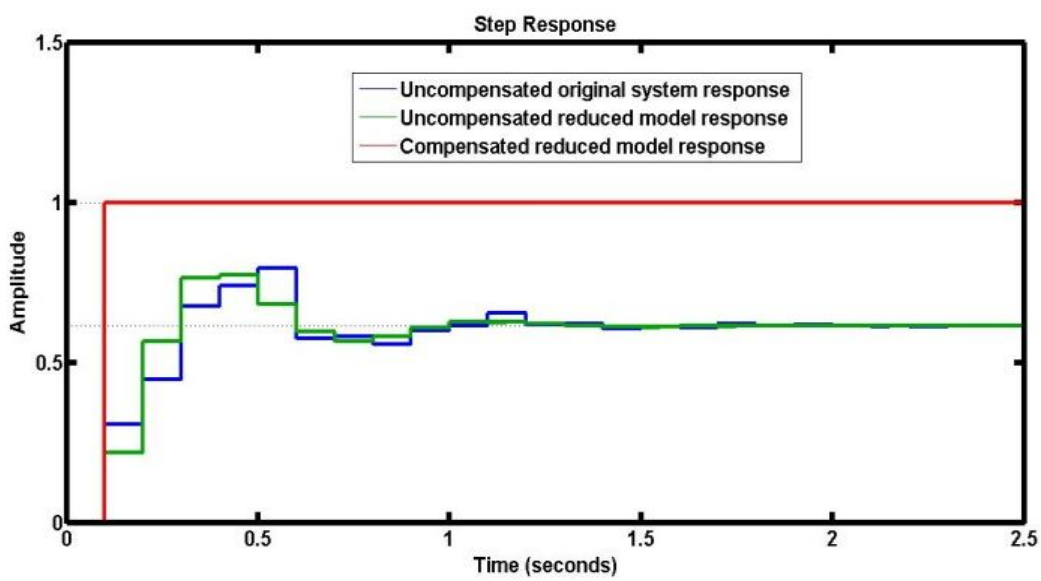

Fig.4.2bUpper Boundary Response

©IJRASET (UGC Approved Journal): All Rights are Reserved

V. CONCLUSION

The manuscript presents combined method for order reduction of large scale discrete time interval systems and its application for the design of compensator to achieve dead beat performance.The Numerical examples shows the validity of the method.

REFERENCES

[1] Shoji,f.f., Abe,k., and Takeda,h., "Model reduction for a class of linear dynamic systems", J.FranklinInst.,1985,319, pp.549-558
[2] T.N. Lucas and A.R.Munro, "Model reduction by generalized least squares method", Electron.Lett., 1991, vol 27, No. 15, pp1383-1384
[3] Lalonde, R,J,.Hartley,T.T., and DE Abreu-Garica,J.A., "Least squares model reduction", J.Franklin Inst., 1992, 329, pp 215-240
[4] Ismail. O., "On Multi Pade approximation for Discrete Interval systems", IEEE Proceedings , pp. 497-501, 1996.
[5] Sastry G.V.K.R. et.al., " Large Scale interval system modeling using Routh approximants", Electronics letters(IEE,U.K.) vol.36, No.8, pp.768-769, April, 2000.
[6] V.Singh, "Obtaining Routh –Pade Approximants using the Luus-Jaakola algorithm", IEE Proceedings – Control Theory and Applications, 2005,vol.152,no.2,p.129-132.
[7] Younseokchoo, "A Note on Discrete Interval system Reduction Via Retention of Dominant Poles", International Journal of control, Automation and Systems, 2007,vol.5,no.2,p.208-211.
[8] G.Pamer ,R.Rajendra Prasad and S.Mukherjee, " Order reduction by Least –Squares Methods about General Point 'a'", International; Journal of Electronics and communication Engineering,Vol:1,No:2,2007
[9] B.Vishwakarma and R. Prasad, "Clustering Method for Reducing order of linear system using Pade approximation" , IETE journal of Reaserch 2008,vol.54,no.5,p.326-330.
[10] DevenderkumarSaini ,Rajendra Prasad, " Order Reduction of Linear Interval systems using Genetic Algorithm", International journal of Engineering and Technology ,2010 vol.2, no.5,p.316-319.
[11] Sastry G.V.K.R, MallikarjunaRao.P., Surya Kalyan.G., "Order reduction of discrete time SISO interval systems using pole clustering technique", I.JIREA,, vol.4, 2011.
[12] K.Kiran Kumar and G.V.K,R Sastry, " A New method of order reduction for high order interval systems using least squares method", International journal of Engineering Research and Applications ,Vol.2,Issue 2,Mar- Apr 2012,PP.156-160.
[13] Wang Zhi-zhen, "A Revised Routh Approximations for Interval System", International Journal of Information and Computer science ,2013,vol.2,no.1,p.16-20.

©IJRASET (UGC Approved Journal): All Rights are Reserved

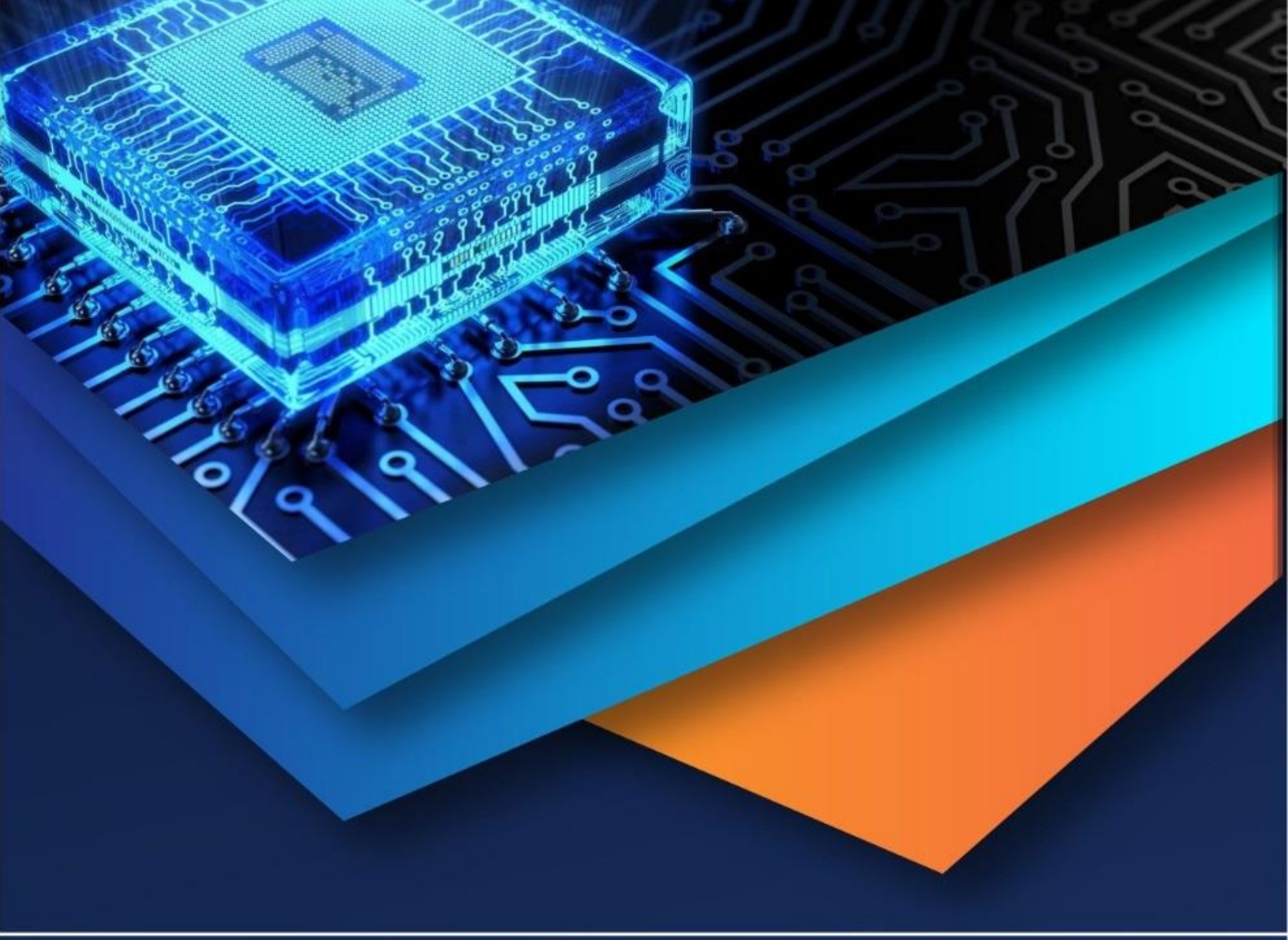

10.22214/IJRASET

45.98

IMPACT FACTOR: 7.129

IMPACT FACTOR: 7.429

INTERNATIONAL JOURNAL FOR RESEARCH

IN APPLIED SCIENCE & ENGINEERING TECHNOLOGY

Call : 08813907089 (24*7 Support on Whatsapp)