iJRASET
International Journal For Research in
Applied Science and Engineering Technology

INTERNATIONAL JOURNAL FOR RESEARCH

IN APPLIED SCIENCE & ENGINEERING TECHNOLOGY

Volume: 6 **Issue:** II **Month of publication:** February 2018

DOI:

www.ijraset.com

Call: 08813907089 | E-mail ID: ijraset@gmail.com

International Journal for Research in Applied Science & Engineering Technology (IJRASET)
ISSN: 2321-9653; IC Value: 45.98; SJ Impact Factor: 6.887
Volume 6 Issue II, February 2018- Available at www.ijraset.com

Industrial PVC Pipe Counting Using Image Processing and Email Notification

Mr. Chetan D. Patil[1], Ms. Neeta M. Awale[2], Ms. Ashwini V. Kumbhar[3], Ms. Komal S. Chavan[4], Ms. Mohini P. Jadhav[5], Ms. Shubhangi R. Khot[6]
[1]*Assistant Professor, Department of Electrical Engineering*
[2]*Student of UG Department of Electrical Engineering, Sharad Institute of Technology College of Engineering, Yadrav.*

Abstract: In many industries conventional counting is performed by humans and such counting methods are much expensive, inaccurate, complicated as well as time consuming. To overcome this problem, a new method has been introducing to count the industrial pipe, automatically and effectively which is best on image processing.
Keywords: GSM technology, Image processing, Mail notification, Pipe counting.

I. INTRODUCTION

To maximize the accuracy of counting data image processing topology by using MATLAB has been considered. It has a wide range of applications including automatic pipe counting and human computer interaction. The conventional method for pipe counting includes the human errors. To develop the accuracy of counting data, manufacturing company can move towards automatic counting by using image processing. The manual error in conventional method of data recording can be minimized by text messaging and email notification using GSM technology[1]The hardware model is installed in store department of industry. The Web camera is placed at suitable location from where the stored pipes are visible. T he captured image by Web camera is send to personal computer where actual image processing take place using MATLAB. The counted data is transmitted to micro-controller and then displayed on LCD display. Another Max232 is used to make serial communication between micro-controller and GSM module. Text message and mail is send to the user via GSM for this IFTTT mobile application is used.

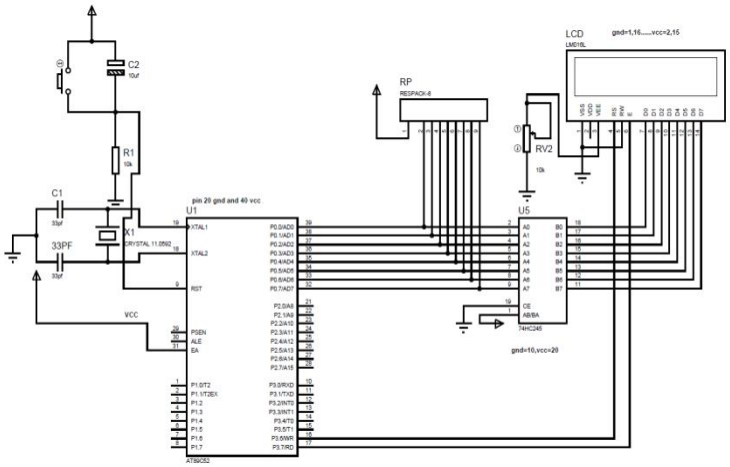

Fig 1. Circuit Diagram

The interfacing of 89S52 microcontroller and LCD display along with whole circuit is shown in fig (1). The reset circuit is used to Reset input. A high input on this pin for two machine cycles while the oscillator is running, resets the device. Crystal oscillator-XTAL1-Input to the inverting oscillator amplifier and input to the internal clock operating circuit and XTAL2-Output from the inverting oscillator amplifier. These octal bus transceivers are designed for asynchronous two-way communication between data buses. The control-function implementation minimizes external timing requirements. The devices allow data transmission from the first bus to the second bus or from the second bus to the first bus, depending on the logic level at the direction-control input.16 * 2 LCD display which has 8 data lines and 3 control lines. The 16 * 2 intelligent alphanumeric dot matrix display is capable of displaying 224 different characters and symbols.

©IJRASET (UGC Approved Journal): All Rights are Reserved

II. RELATED WORK

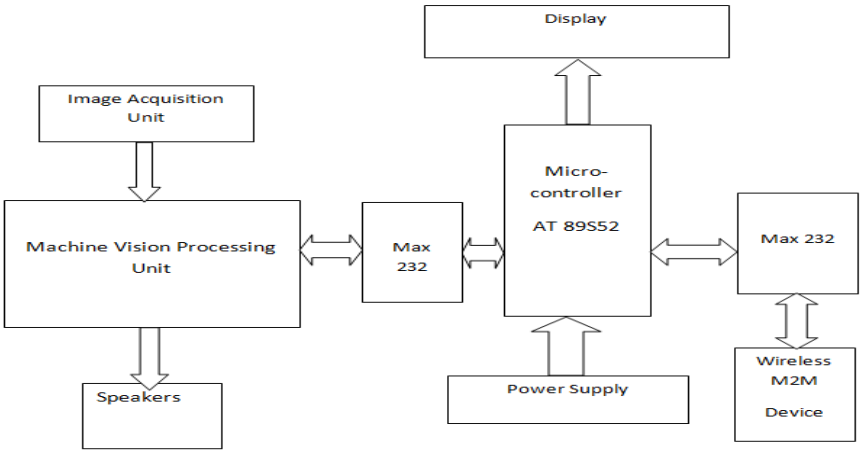

Fig 2: Block diagram

A. *Microcontroller*

In this project, micro-controller 89S52is used with LCD display to display the counted data. Micro-controller 89S52 is low power, high performance CMOS 8-bits micro-controller with 8 Kbytes of in-system programmable flash memory. It is compatible with industry standard 80C51 instruction set and pinout. 89S52 is highly flexible and cost effective solution to many embedded control applications[2].

B. *Power Supply*

The power supply designed as shown in figure bellow-

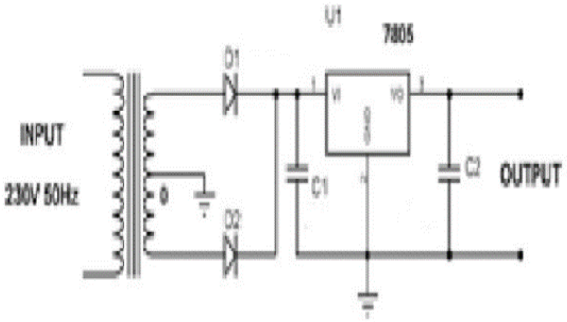

Fig3: Power supply

C. *Regulator*

Regulator IC7805 is used which gives output voltage of 5V. The minimum input voltage required for 7805 is near about 7V, therefore we used the transformer with the voltage rating of 230-9V and current rating 500 mA. The output of transformer is 9V AC. This AC voltage is converted into 9V DC by bridge rectifier circuit [4].

D. *LCD Display*

We have used 16 * 2 LCD display which has 8 data lines and 3 control lines. The connections of LCD are given below –

©IJRASET (UGC Approved Journal): All Rights are Reserved

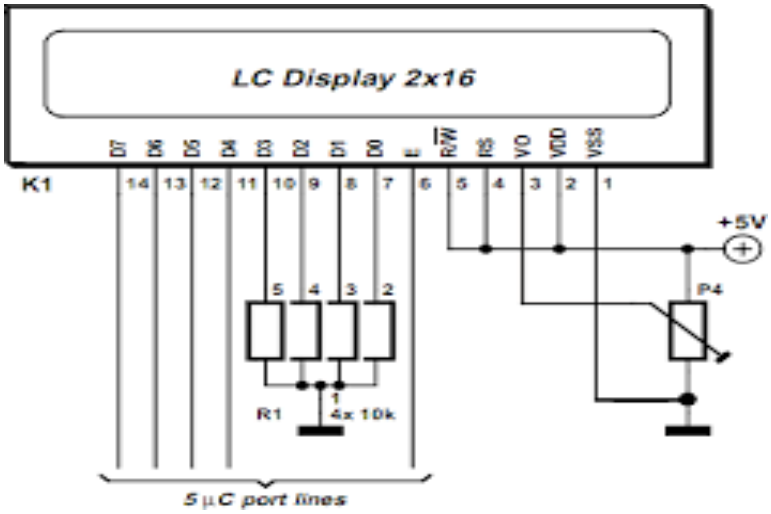

Fig4:LCD connections

E. MAX 232

It is an integrated circuit which converts the signals from RS232 serial port to the proper signal which are used in the TTL compatible digital logic circuit. This IC is used as hardware layer converter like to communicate two systems simultaneously [3].

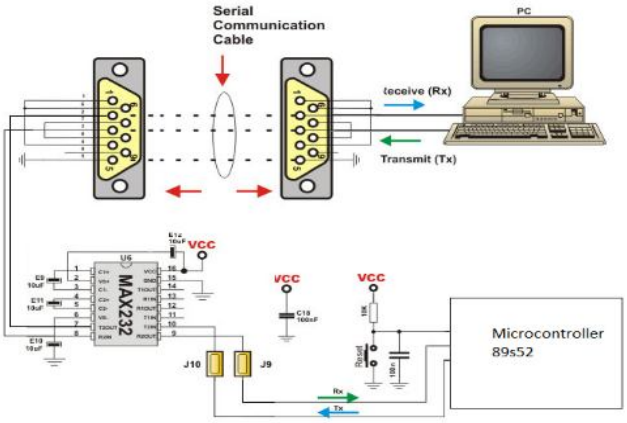

Fig 5: Interfacing with max232

F. Webcam

CD with driver and software:

1) ArcSoft Webcam Companion® 3
2) Magic-i ™ Visual Effects 2
3) Quick set-up guide
4) Limited Warranty document
5) System Requirements
6) USB 2.0 port
7) CD-ROM drive
8) Compatible with Microsoft® Windows 7®, Windows® XP Service Pack 2 and Windows® VistaTM
9) Intel Pentium 4 with 2.4 GHz or AMD Athlon XP 2500+ processor or faster
10) 130 MB Free hard drive space for software
11) 512 MB DDR RAM or above

©IJRASET (UGC Approved Journal): All Rights are Reserved

III. PROPOSED METHOD

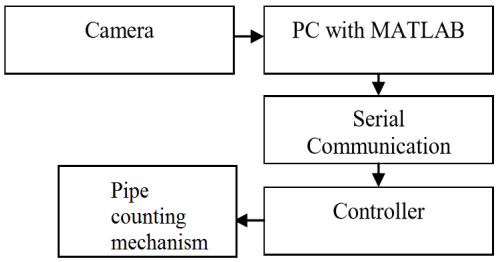

Fig 6: Proposed pipe counting topology

A. Image Processing

Image processing is a method to perform some operations on an image, in order to get an enhanced image or to extract some useful information from it. It is a type of signal processing in which input is an image and output may be image or characteristics/features associated with that image. Nowadays, image processing is among rapidly growing technologies. It forms core research area within engineering and computer science disciplines too.

Image processing basically includes the following three steps [1]:

1) Importing the image via image acquisition tools
2) Analyzing and manipulating the image
3) Output in which result can be altered image or report that is based on image analysis Digital image processing is the use of computer algorithms to create, process, communicate, and display digital images. Digital image processing algorithms can be used to:
4) Convert signals from an image sensor into digital images
5) Improve clarity, and remove noise and other artifacts
6) Extract the size, scale, or number of objects in a scene
7) Prepare images for display or printing
8) Compress images for communication across a network
9) Removing noise using a Wiener Filter
10) Counting circular objects in an image

B. Pre-processing

The raw data (RGB image) acquired from digital camera are pre-processed for further data analysis. It includes the gray scale conversion, threshold effect and elimination of noisy objects which are present in the raw image. The different data-processing stages are described below [1].

A. Steps of image pre-processing:

1) Image of object captured by web camera as shown in fig (a).
2) Input image is acquired from digital camera and then it is converted into gray scale image as shown in fig (b).
3) Noise is generated in image. Some unwanted objects (some dots, some small objects and noises) remain in the image as shown in fig (c).
4) The noise is removed by using filtering process. There are some inbuilt filters in MATLAB for filtering process. Clear image is obtain as shown in fig (d).
5) The edges in clear image are not proper. The image processing itself recover the edges as shown in fig (e).
6) Sobel algorithm is used to obtain broad edges and define the objects clear as shown in fig (f).

©IJRASET (UGC Approved Journal): All Rights are Reserved

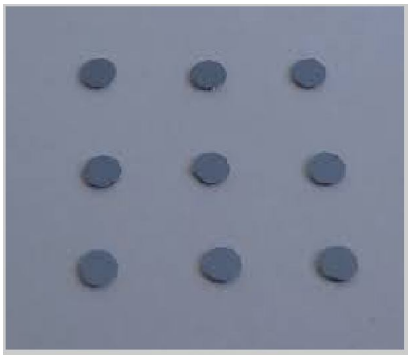

Fig (a)

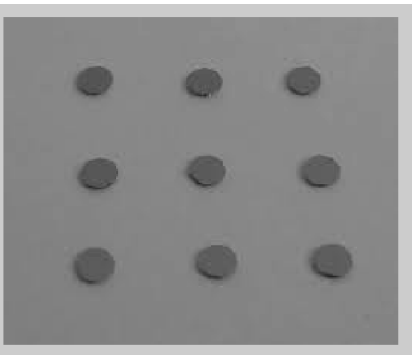

Fig(b)

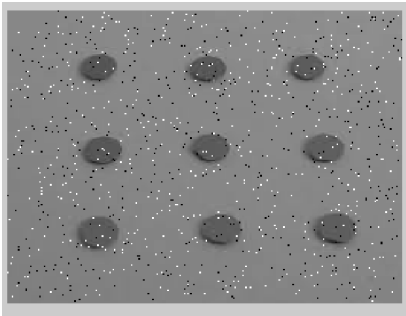

Fig(c)

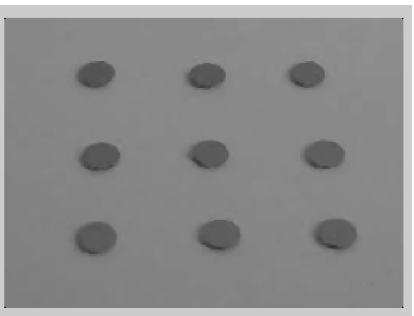

Fig(d)

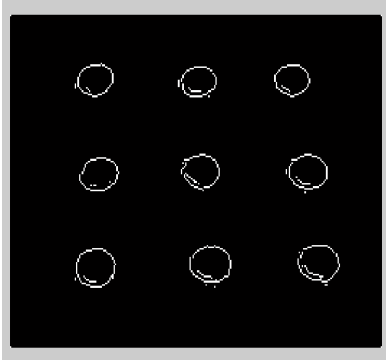

Fig(e)

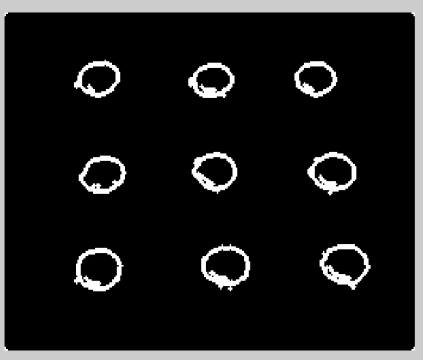

Fig(f)

Fig7: Image Preprocessing

C. Gsm

Fig8: GSM module

©IJRASET (UGC Approved Journal): All Rights are Reserved

Global system for mobile communication is a globally accepted standard for digital cellular communication. GSM is the name of a standardization group established in 1982 to create a common European mobile telephone standard that would formulate specifications for a Pan-European mobile cellular radio system operating at 900MHz. Throughout the evolution of cellular telecommunications, various systems having developed without the benefit of standardized specification. This presented many problems directly related to compatibility, especially with the development of digital radio technology. The GSM standard is intended to address to these problems[4].GSM provides recommendation, not requirements. The GSM specification define the functions and interface requirements in detail but do not address the hardware. The reason for this is to limit the designers as little as possible but still to make it possible for the operators to buy equipment for different suppliers.

III. SIMULATION

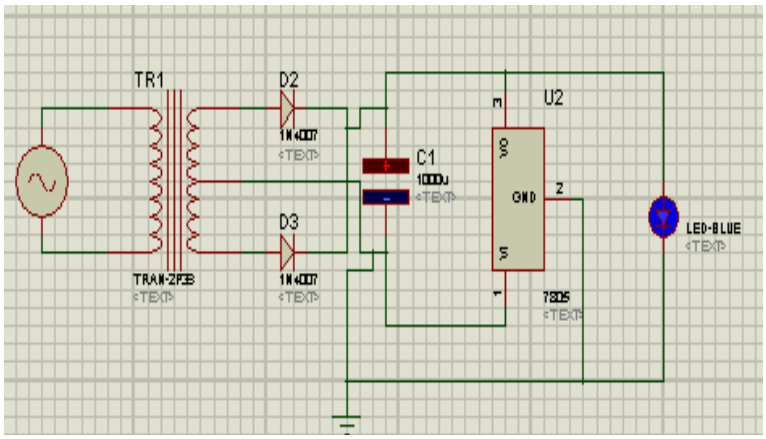

Fig9: Simulation of power supply

Power supply is design to convert 230V ac to 5V dc supply for microcontroller rand LCD display. Microcontroller 89S52 is connected to LCD display. The resister pack is connected to zero port because zero port is not having inbuilt resistance. For simulation of LCD display, PROTEUS software is used

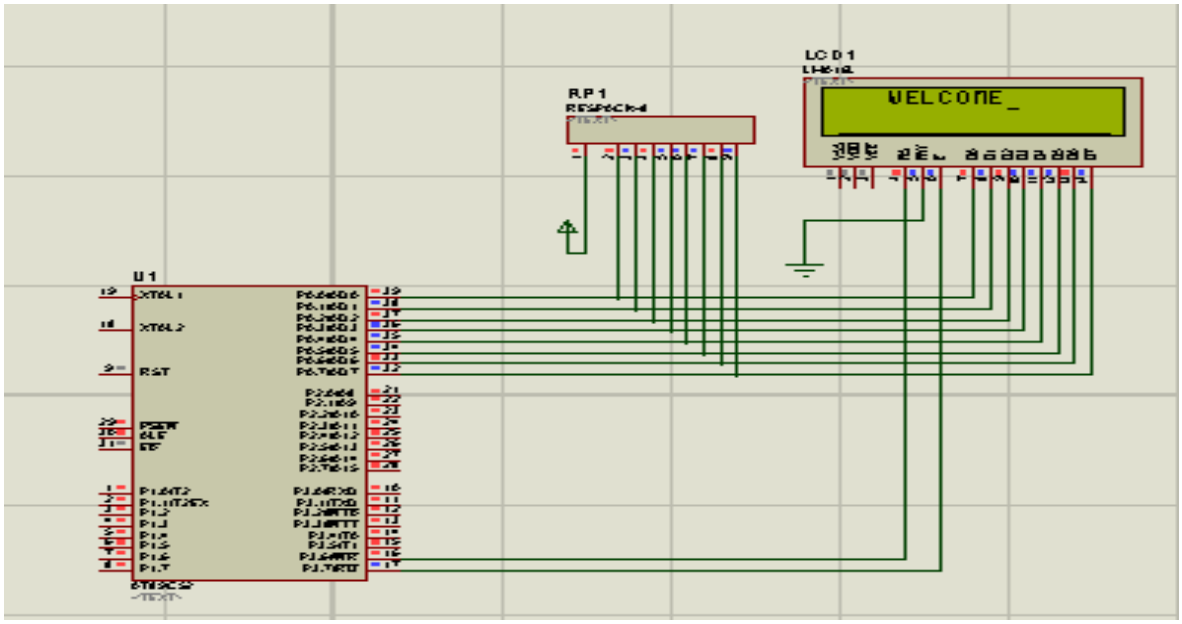

Fig 10:Simulation of LCD display

.V.RESULT

After execution of program in MATLAB the final count displayed on the LCD screen [Fig.12] and in MATLAB command window [Fig.13]. This count will be send as a text message [Fig.14] to the owner's mobile phone with the help of GSM module and also the E-mail of this count will send by using IFTTT mobile application.

©IJRASET (UGC Approved Journal): All Rights are Reserved

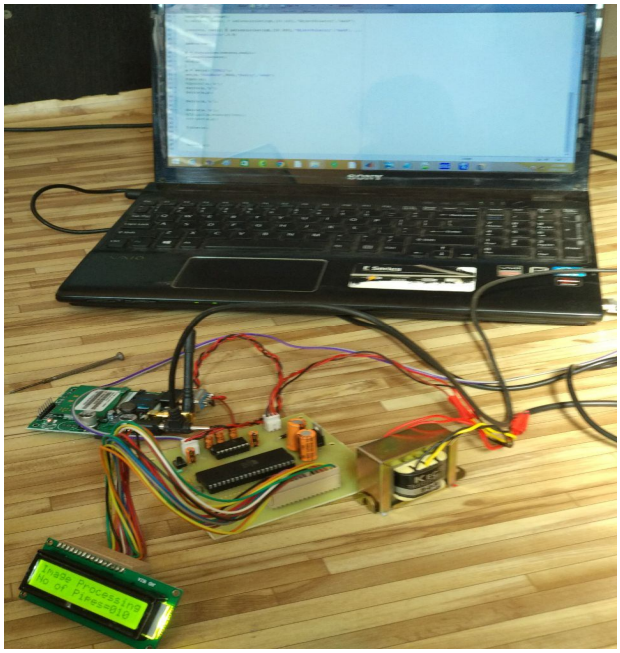

Fig11. Project setup

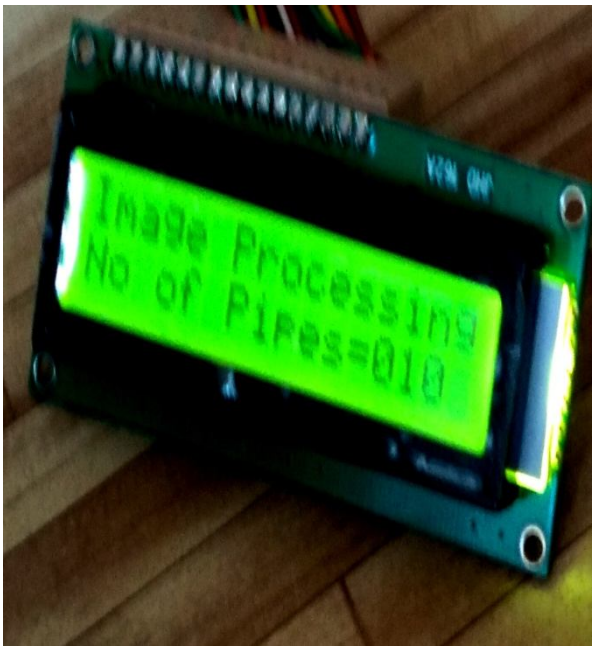

Fig 12. Result on LCD display

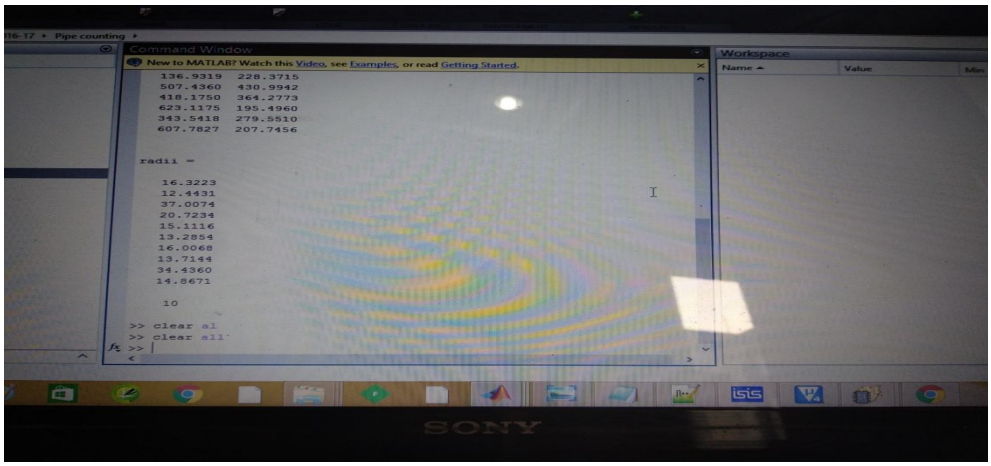

Fig. 13 Result on MATLAB screen

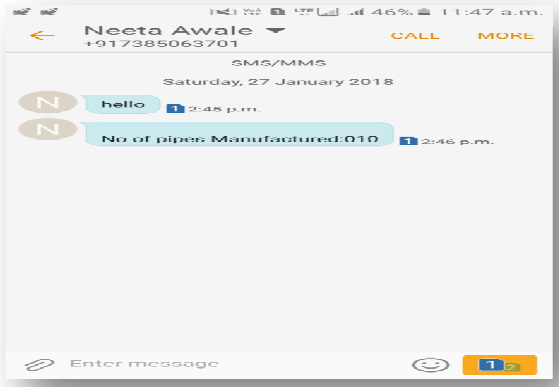

Fig14. Received message by the owner

©IJRASET (UGC Approved Journal): All Rights are Reserved

VI.CONCLUSION

This project can be further innovated by using Robotics technology. The reduction of man power, time consumption & accurate counting data are the main goals of this project. Digitalization of small scale industry is achieved. The important feature which makes this counting system reliable, is the use of image processing technology instead of sensors.

REFERENCES

[1] Mayuri Dharma Shinde, prof. Kishor Wane, "An Application of Image Processing to Detect the Defects of Industrial Pipes", International Journal of Advanced Research in Computer and Communication Engineering, Vol.5, issue 3, March2016.

[2] "The 8051 Microcontroller and Embedded System, Using assembly and C", Second Edition, By M. A. Mazidi, J.G. Mazidi, R.D. McKinlay.

[3] HakanCoskun, Tom Pfeifer, "Open M2M Data-Position paper",1stIEEE International Workshop on Machine to Machine Communication Interfaces and platforms 2013.

[4] K. Anusha, T. Suresh, K. Niranjan Reddy, "GSM Based Automation System for Agriculture field",IJCSMC.Vol. 4, Issue.1, Jan 2015, page .236 to 242.

©IJRASET (UGC Approved Journal): All Rights are Reserved

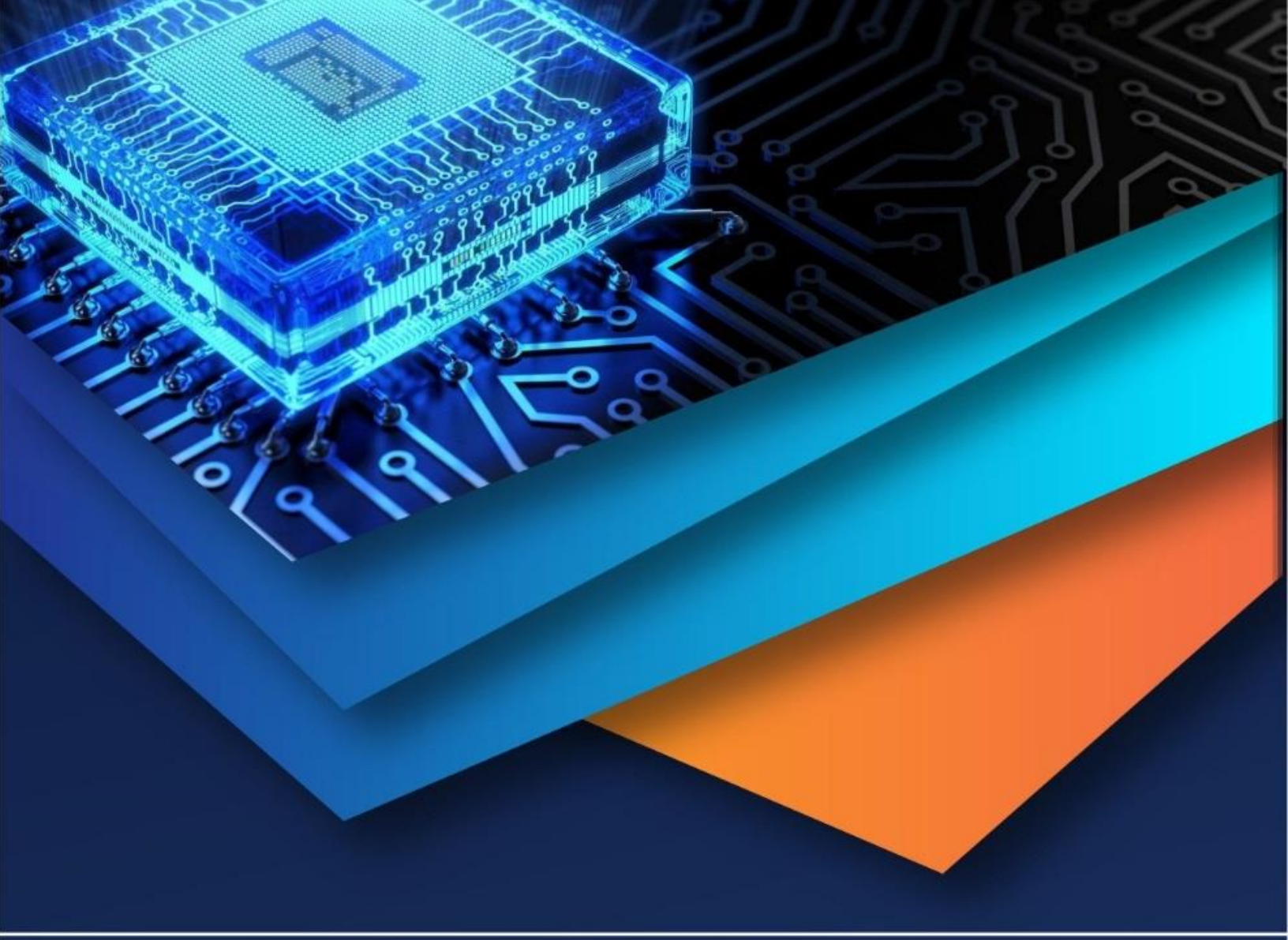

10.22214/IJRASET

45.98

IMPACT FACTOR: 7.129

IMPACT FACTOR: 7.429

INTERNATIONAL JOURNAL FOR RESEARCH

IN APPLIED SCIENCE & ENGINEERING TECHNOLOGY

Call : 08813907089 (24*7 Support on Whatsapp)