iJRASET
International Journal For Research in Applied Science and Engineering Technology

INTERNATIONAL JOURNAL FOR RESEARCH

IN APPLIED SCIENCE & ENGINEERING TECHNOLOGY

Volume: 6 **Issue:** IV **Month of publication:** April 2018

DOI: http://doi.org/10.22214/ijraset.2018.4365

www.ijraset.com

Call: 08813907089 | E-mail ID: ijraset@gmail.com

International Journal for Research in Applied Science & Engineering Technology (IJRASET)
ISSN: 2321-9653; IC Value: 45.98; SJ Impact Factor: 6.887
Volume 6 Issue IV, April 2018- Available at www.ijraset.com

"Compact Frequency Reconfigurable Planar Inverted E-Antenna"

Swapna Hole[1], Smita Shinde[2], Priyanka Khochare[3] Prof. D. S. Bhosale[4],
[1, 2, 3, 4]*Department of Electronics &Telecommunication, Engineering, BhivarabaiSawant Institute of Technology and Research, Wagholi, Pune.*

Abstract: A novel eight-band LTE/WWAN recurrence reconfigurable reception apparatus for practical tablet computer applications is proposed in this correspondence. With a little measurement of 40 12 4 , the proposed reception apparatus includes a circle nourishing strip and a shorting strip in which a solitary post four throw RF switch is installed. The RF change is utilized to change the resounding methods of lower band among four diverse working states, so that the reception apparatus can give a multiband activity of LTE700/GSM850/900/1800/ 1900/UMTS2100/LTE2300/2500 with return misfortune superior to 6 dB. Sensible great transmitting productivity and reception apparatus pick up are likewise accomplished for the practical tablet computer.
Keywords: Frequency reconfigurable antenna, mobile antenna, LTE/WWAN antenna.

I. INTRODUCTION

Nowadays, a growing number of wireless communication equipment's appear in people's lives. The widely use in many field makes the miniaturization and multi-band becomes the mainstream trend of antenna design, but it is huge challenge to design antenna design is continuously increasing, not only on the pressure of the market needs but also by the duty of safety regulation which require efficient antenna capable of radiating as much power as possible in free-space condition.

Finally, with the commercial success of wireless handheld devices comes the important role of good manufacturing techniques. This is not only important for reducing the cost of mass producing, but also for enhancing the design performance and size in a controlled fashion.

In radio and electronic, an antenna is an electrical device which converts electric power into radio waves, and vice versa. It is usually used with a radio transmitter or radio receiver.

In transmission, a radio transmitter supplies an electric current oscillating at radio frequency i.e. high frequency alternating currents (AC) to the antenna's terminals, and the antenna radiates the energy from the currents as electromagnetic waves (radio waves).

A. Need of Project

Frequency Reconfigurable Planar Inverted-F Antenna, structure are mostly used antennas suitable for mobile devices and are good for being used as multiband antennas. It can be mitigated by applying several techniques to improve its bandwidth characteristics, efficiency, and gain and reduce dimensions, etc.

B. Objectives

1) Project deals with reconfigurable antenna LTE/WWAN mobile devices.
2) It mainly consist Radiating Element and PIN Diodes.
3) Antenna can be operated over 6 Modes.
4) Modes can be selected by varying offset voltage of diodes.
5) Antenna can be operated over 6 frequency bands.
6) Compact Antenna Design

C. Problem Description

The proposed Frequency reconfiguration planar inverted –F antenna is designed for multiple bands such as LTE 1.8/2.1/2.3GHz, Bluetooth 2.4GHz and WLAN 3.65GHz these frequencies are adjusted by altering ON/OFF position of RF switches.

©IJRASET (UGC Approved Journal): All Rights are Reserved

II. BLOCK DIAGRAM OF PROPOSED SYSTEM

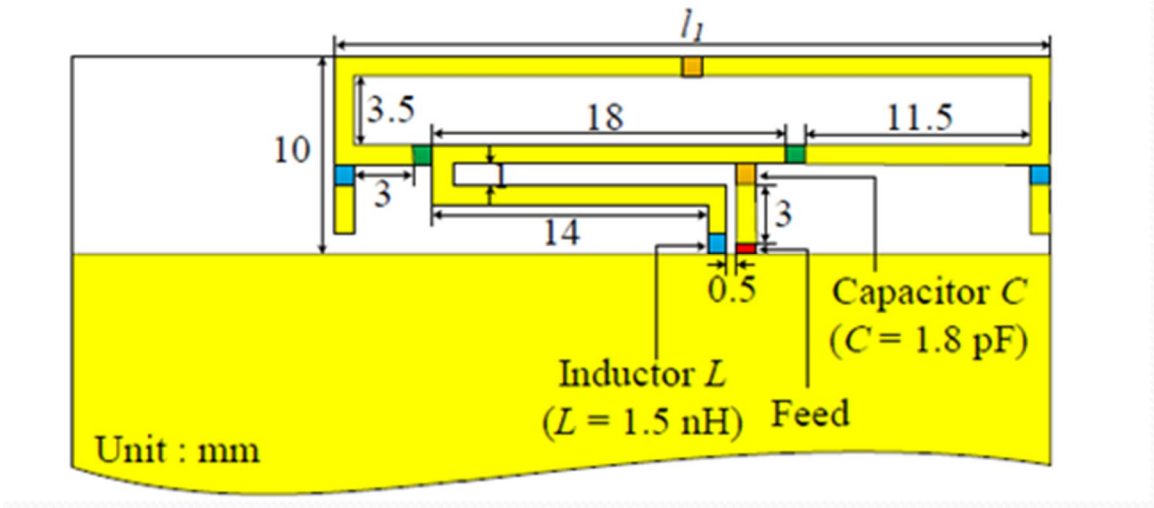

Fig .1 Block diagram of Proposed System

A. *Block Diagram Explanation*

The geometry of the proposed antenna. The antenna and ground plane are fabricated on the top layer of a commercially available FR-4 dielectric substrate with a permittivity of 4.4 and a thickness of 1..6mm.The proposed antenna mainly consists of radiating elements and two PIN diodes(part number:HSMP-3860).When S1Switch is “ON” and other S2 and S3 Switch are “OFF” we get resonance frequency of 2.3GHZ which is LTE band with4.87 gain voltage standing wave ratio is 1.20 which is nearly about standard value of VSWR. It is ratio of maximum voltage to the minimum voltage to the minimum voltage. Reflection coefficient of -31.54 with 50% antenna efficiency.

When S2 switch is “ON” and other S1 and S3 are “OFF” we get resonance Frequency of 1.8GHZ and 2.4 GHZ which are dual band first band is LTE and second band is Bluetooth with gain 4.36 and 3.20. Voltage sanding wave ratio is 1.07 and 1.57 which is nearly about standard value of VSWR. It is ratio of maximum voltage to the minimum voltage. Reflection coefficients are -13and -19.55 with higher than first mode i.e.71% and 85% antenna efficiencies.

B. *Mode of Operation*

	PIN Diode 1	PIN Diode 2	Configuration	Operating Mode	Operating Band
Antenna 1	ON	OFF	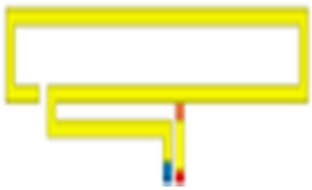	Mode 1,2,3	Mode1: LTE700 Mode 2&3: LTE 2300, 2500
Antenna 2	OFF	ON	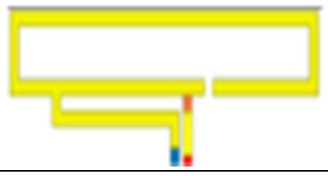	Mode 4,5	GSM: 850/900
Antenna 3	ON	ON	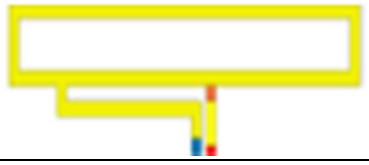	Mode 6	GSM: 1800/1900

©IJRASET (UGC Approved Journal): All Rights are Reserved

III. HARDWARE DESCRIPTION

A. RF Switch

An RF and microwave switch is a device to route high frequency signals through transmission paths. RF and microwave switches are used extensively in microwave test system for signal routing between instruments and devices under test. Incorporating a switch into a switch matrix system enable you to route signals from multiple instruments to single or multiple DUTs. This is allows multiple tests to be performed with the same setup, eliminating the need for frequent connects and disconnects. The entire testing process can be automated, increasing the throughput in high-volume production environments. Like other electrical switches, RF and microwave switches provide different configuration for many different applications. Below it is a list of typical switch configuration and usage.

1) Single pole, double throw Switches route signals form one input to two output paths.
2) Multiport switches or single pole, multiple throw switches allow a single input to multiple output paths.
3) Transfer switches or double pole, double throw switches can serve various purposes.
4) Bypass switches insert or remove a test component from a signal path.

B. Copper Conducting Material

Copper has been used in electrical wiring since the invention of electromagnet and the telegraph. Copper is the electrical conductor in many categories of electrical wiring. Copper wire is use in power generation, power transmission, power distribution, and telecommunication. Copper and its alloys are also use to make electrical contacts. Electrical conductivity is a measure of how well a material transport an electric charge .This is an essential property in electrical wiring systems. Copper has the highest electrical conductivity rating of all non-electrical resistivity .In a copper atom, the outermost 4senergy zone, or conduction band is only half filled, so many electrons are able to carry electric current. When an electric field is applied to a copper wire, the conduction of electrons accelared towards the electropositive end 'thereby creating a current

C. PIN Diode

The PIN diode is the diode with a wide, undoes intrinsic semiconductor region between a p-type semiconductor and n-type semiconductor region. The PIN Diodes operates under what is known as high -level injection. In other word, the intrinsic "i" region is flooded with charge carriers from the "p" and "n" region .The PIN Diode obeys the standard diode for low frequency signals. At higher frequencies, very linear, even for large signals. There is a lot of stored charge in intrinsic region. At low frequencies the charge can be removed and the diodes turned off .At high frequencies, there is not enough time to remove the charge, so the diode never turns off. The PIN Diode has a poor reverse recovery time. The high frequency resistance is inversely proportional to the DC bias current through the diode.

D. Capacitor

A capacitor is a passive two terminal electrical components that stores electrical energy in an electric field. The effect of a capacitor is known a capacitance. While capacitance exists between any two electrical conductors of a circuit in sufficiently close proximity, a capacitor is specifically designed to provide and enhance this effect for a variety of practical applications by consideration of size, shape, and positioning of closely spaced conductors, and the intervening electric material. A capacitor was therefore historically first known as an electric condenser .The physical form and construction of practical capacitors vary widely and many capacitor type are in common use. capacitors contain at least two electric conductors often in the form of metallic plates or surfaces separated by a dielectric medium. A conductor may be a foil, thin film, sintered bead of metal, or an electrolyte. The non conducting dielectric acts to increase the capacitor's charge capacity. Materials commonly used as dielectrics include glass, ceramic, and oxide layers. Capacitors are widely used as parts of electric circuits. In many common electrical devices. Unlike a resistor, an ideal capacitor does not dissipate energy.

E. FR-4 Dielectric Substrate

FR-4 is a grade designation assigned to glass reinforced epoxy laminated sheets, tubes, rods and printed circuit board (PCBs). FR-4 is a composite material composed of woven fibre glass cloth with an epoxy resin binder that is flame resistance.FR-4 does not specify specific material, only a grade of material. Typical physical and electrical properties of FR-4 are as follows. The abbreviations LW (lengthwise, warp yarn direction) and CW (crosswise, fill yarn direction) refer to the conventional perpendicular fibre orientations in the XY plane of the board (in-plane). In terms of Cartesian coordinate, length wise is along the x-axis,

©IJRASET (UGC Approved Journal): All Rights are Reserved

crosswise is along the y-axis, and the z-axis is referred to as the through-plane direction. Keep in mind that the values for the parameters listed below are an example for a certain manufacturer's material. Each manufacturer will have slightly different values for the parameters listed below. It's better to check the datasheet of the specific material being used. Verifying the actual values is very important for high frequency designs.

F. Inductor

An inductor, also called a coil or reactor, is a passive two terminal electrical component that stores electrical energy in a magnetic field when electric current flows through it. An inductor typically consists of an electric conductor, such as a wire, that is wound into a coil around a core. When the current flowing through an inductor changes, the time-varying magnetic field induces a voltage in the conductor, described by Faradays law of induction. An inductor is characterized by its inductance, which is the ratio of the voltage to the rate of change of current. Inductors are widely used in AC electronic equipment, particularly in radio equipment. They are used to block AC while allowing DC to pass; inductors designed for this purpose are called chokes. They are also used in electronic filters to separate signals of different frequencies, and in combination with capacitors to make tuned circuit, used to tune radio and TV receivers.

IV. SOFTWARE DESCRIPTION

A. CST Studio Suite

CST is stand for Computer Simulation Technology it is 3D electromagnetic simulation software.CST offers accurate, efficient computational solutions for electromagnetic design and analysis. Our 3D EM simulation software is user-friendly and enables you to choose the most appropriate method for the design and optimization of devices operating in a wide range of frequencies. To ensure that CST simulation technology remains at the cutting edge, its solvers are under continuous development, and represent decades of research into accurate and efficient computational techniques. This accuracy has allowed customers in many application areas who use CST STUDIO SUITE to construct virtual prototypes that mimic the behaviour of real devices, saving time and money in design cycle. The CST complete Technology approach makes it possible to verify a simulation by comparing the result from several different solvers within a single interface.

1) Material Types in CST Studio Suite

a) Dielectrics
b) Lossy metals
c) Anisotropic materials
d) Time -dependent materials
e) Temperature-dependent materials
f) Graded materials
g) Dispersive materials
h) Non-linear material
i) Coated materials

B. High Performance and Cloud Computing

CST offers a multitude of hardware-based simulation acceleration options, such as multithreading, hardware acceleration, MPI cluster computing and distributed computing. These can be used to increase the speed of a simulation, to simulate larger and more complex models, or to divide tasks between multiple nodes in a network or cluster. These high performance computing (HPC) methods are available for a almost every type of application and hardware configuration, ranging from individual workstation to enterprise-level cluster. For small business with big requirements, CST STUDIO SUITE can also be run in the cloud.

C. Automatic Optimization

The number of variable that affect the performance of even the simplest device can be overwhelming. Optimization automates the process of tuning these variables, with the goal of finding a set of values that satisfies the design requirements. The built-in optimizers in all CST STUDIO SUITE modules can be used to optimize any parameter, including the geometry of the model, the properties of the materials and the waveform of the excitation. It includes both local and global optimizers. Local optimizers search the parameter space close to the initial values they offer fast performance for fine-tuning a nearly optimal model.

©IJRASET (UGC Approved Journal): All Rights are Reserved

D. Usability

With so many features in CST STUDIO SUITE, it's important to have the tools on hand when they're needed. To help users find their way through the simulation process, CST STUDIO SUITE include features that set up the simulation environment for user's needs, outline the modeling, simulation and post-processing workflow and show the appropriate options for each step of the process. The graphical user interface uses tabbed ribbons to present the most relevant tools for each step of the design process, and it is automatically configured according to the application.

E. Antenna Array Simulation

CST STUDIO SUITE can be used to develop both small and large arrays of antennas and other Components, from the design of the individual element to simulation of the full system including Feeds and radomes. MIMO (Multiple-Input, Multiple-Output) is a technology widely used in mobile communication to take advantages of multipath propagation and improve reception in complex environments, and forms the basic of smart and cognitive antennas.CST STUDIO SUITE including a toolbox of special features for calculating performance metrics for MIMO antennas such as multiplexing efficiency and envelope correlation.

F. Dip Trace

Dip Trace is EDA/CAD software for creating schematic diagrams and Printed circuit board. The developers provide a multi-lingual interface and tutorials (currently available in English and 21 other languages). Dip Trace has 4 modules: schematic capture editor, PCB layout editor with built-in shape-based auto router and 3D-preview & export, component editor, and pattern editor.

1) Basic Features

a) Simple user interface
b) Multi-sheet and hierarchical schematics
c) High-speed shape-based auto router
d) Smart manual routing tools
e) Differential parts
f) Wide import / export capabilities
g) Advanced verifications with real-time DRC
h) Real-time 3D PCB previe
i) Export of PCB to STEP 3D file format

V. SYSTEM DEVELOPED AND EXPERIMENTAL PROCEDURE

A. Algorithm of CST Studio Suite

1) Open CST Studio and select new project template.
2) Select an Antenna template.
3) Follow the condition of quick start.
4) Define the units.
5) Units will be typically "mm" for lengths, "GHz" for frequency, and "ns" for time analysis.
6) Define the frequency and length of antenna Geometry.
7) Check background material and boundary condition
8) Background material will typically by vacuum for the analysis of antenna.
9) All the boundary conditions will be "open" which assumes that we don't assume any external condition to the antenna.
10) We assign the Xmin, Ymin, Zmin .
11) Define the structure, the structure will be only a discrete port.
12) Launch the simulation.

B. Description of CST Studio Suite Algorithm

1) Open CST Studio and select new project template
2) Firstly start the process of simulation, open CST STUDIO SUITE after that click on new project template.
3) Select a Antenna template
4) Choose an application area and then select one of the workflows
5) There are many windows

©IJRASET (UGC Approved Journal): All Rights are Reserved

6) Antenna
7) Circuit and components
8) Radar cross section
9) Biomedical, exposure, SAR
10) Optical application
11) Periodic structure
12) Select the first option that is Antenna.
13) Follow the condition of quick start:
14) Start for geometric process.
15) Define the units
16) For antenna geometric we define the length and various frequency i.e. LTE-1.8GHZ, Bluethooth-2.4GHZ, WLAN-3.6GHZ respectively.
17) Check background material and boundary condition:
18) We are select the normal material type and click on ok.
19) Background material will typically by vacuum for the analysis of antenna:
20) All the boundary conditions will be "open" which assumes that we don't assume any external condition to the antenna
21) In that steps we select the boundary conditions, we apply in all direction boundaries are open and then click on ok.
22) We assign the Xmin, Ymin, Zmin:
23) Define the structure, the structure will be only a discrete port:
24) Click on simulation and go to discrete port and select the components.
25) Launch the simulation:
26) Launch the simulation, go to start icon and click on start.

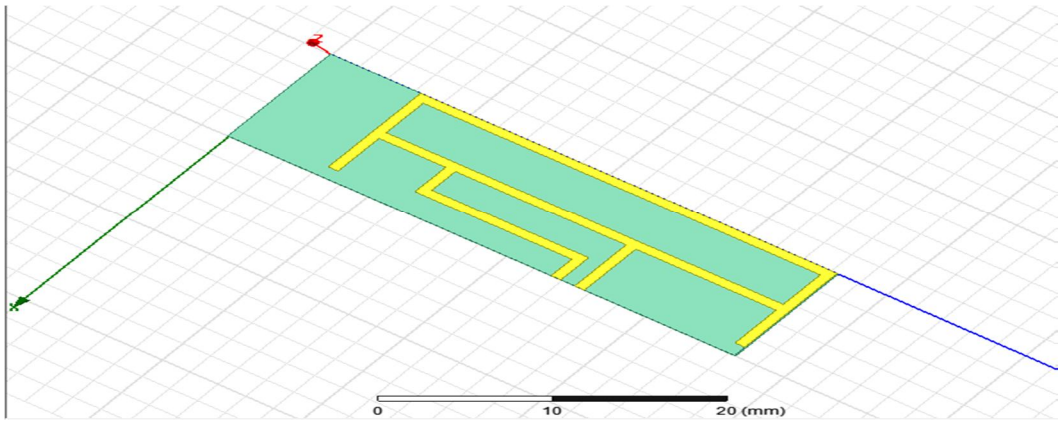

Fig A). Antenna Design1 view1

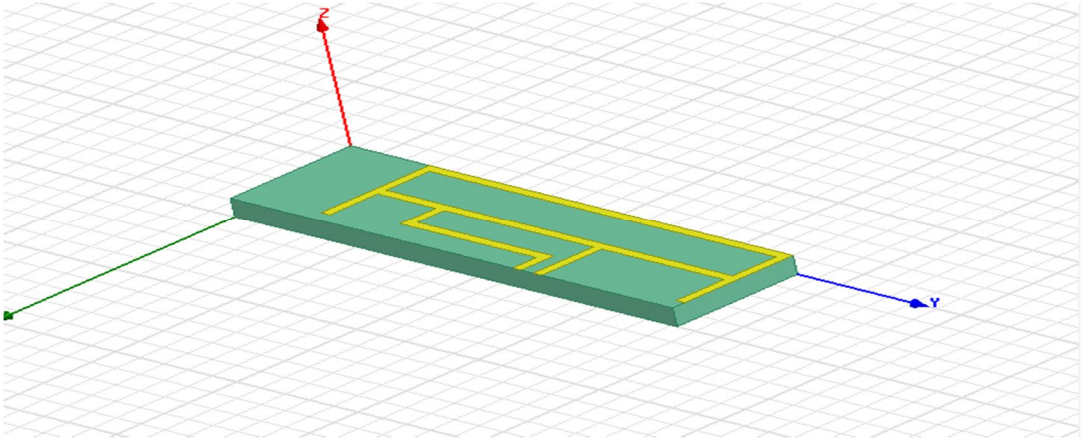

Fig B). Antenna Design1 view2

©IJRASET (UGC Approved Journal): All Rights are Reserved

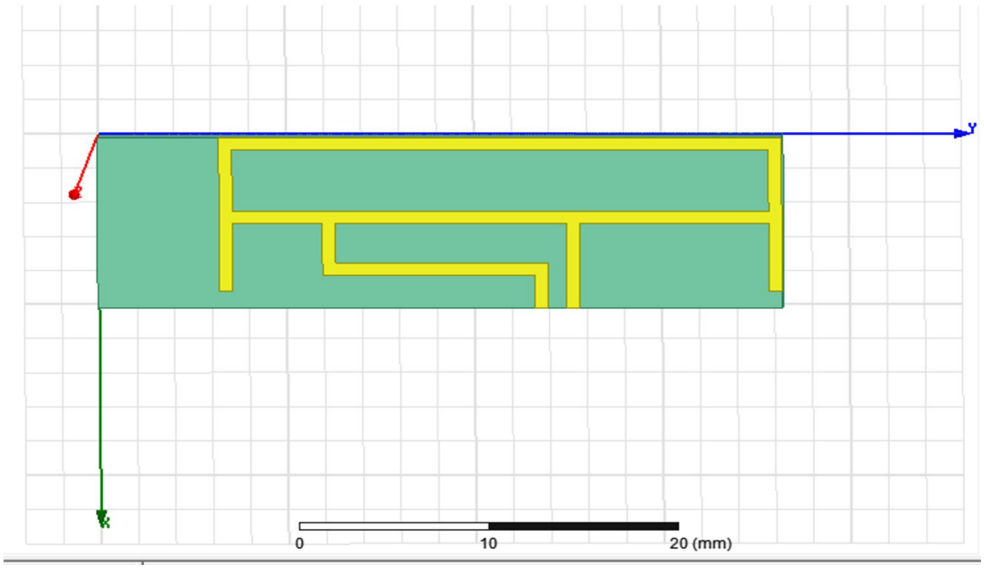

Fig C). Antenna Design1 view2

VI. SUMMARY AND DISCUSSIONS

A. *Antenna Design*

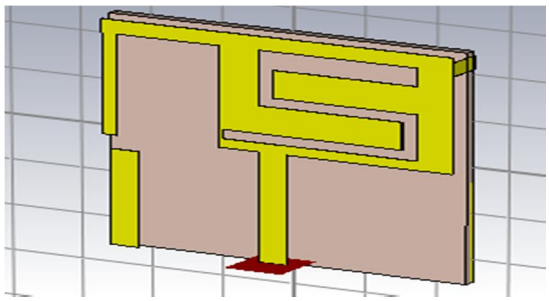

1) *S Parameters*

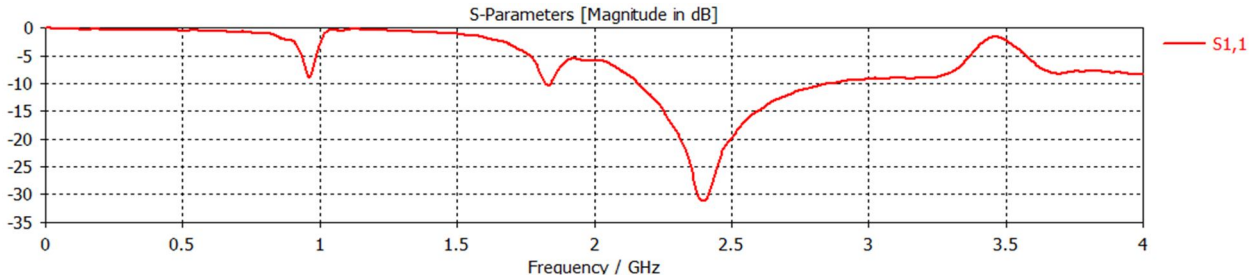

2) *VSWR*

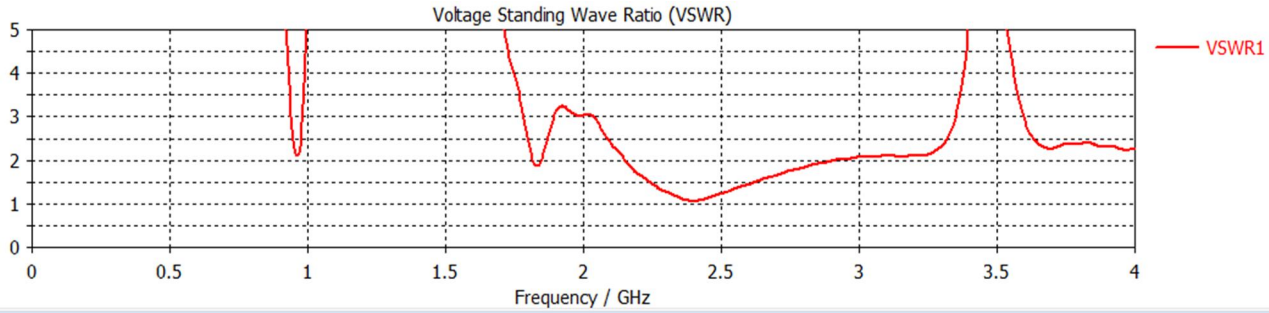

©IJRASET (UGC Approved Journal): All Rights are Reserved

3) *S Parameters Balance*

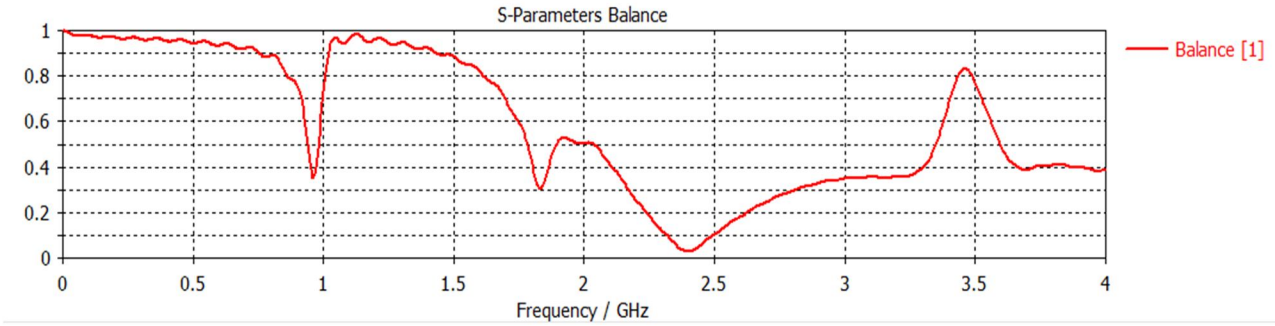

4) *Gain*

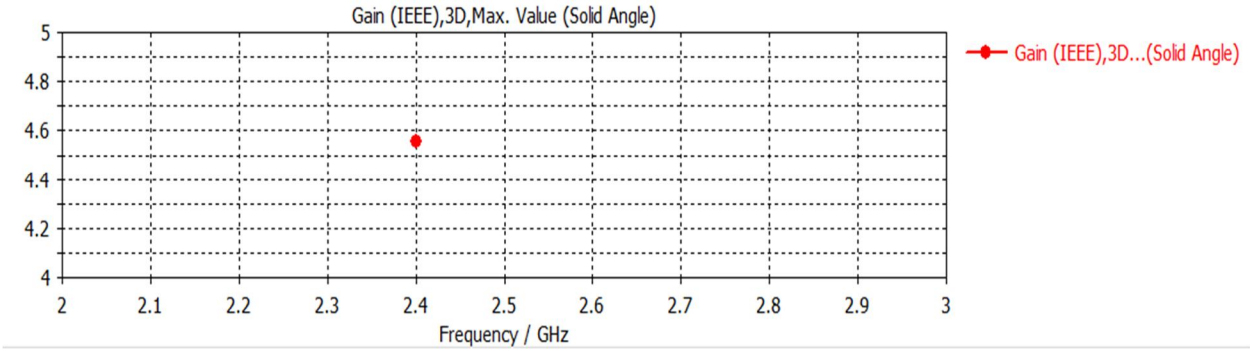

5) *Efficiencies*

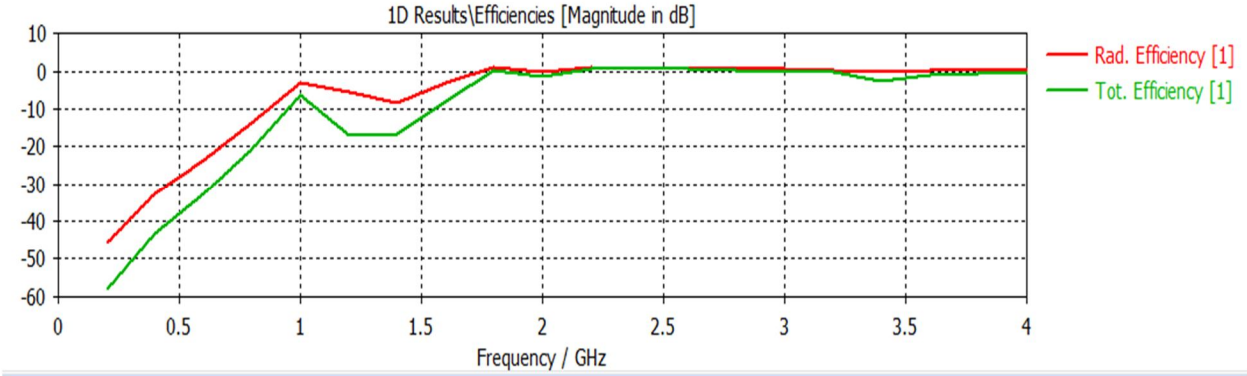

6) *2D View*

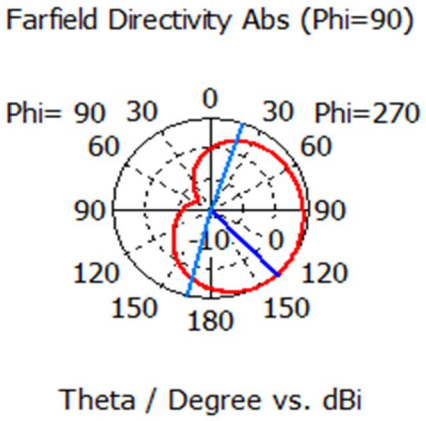

©IJRASET (UGC Approved Journal): All Rights are Reserved

B. Advantages

1) The frequency reconfigurable antennas have good radiation characteristics for frequency operating bands.
2) In antenna patch is slide above the ground, give good radiation patterns compare to micro strip patch antenna.
3) Frequency reconfigurable PIFA antenna is a low cost and have easy fabrication
4) The frequency reconfigurable PIFA, have a compact size
5) The frequency reconfigurable PIFA, is more efficient.
6) The frequency reconfigurable antenna has a good impedance matching.
7) Single antenna is used for multi-band frequency operation.

C. Applications

1) Mobile handset antenna.
2) Tablet computer.
3) Mobile Phone.
4) Military application.
5) In compact hand- held wireless devices.

VII. CONCLUSION

In this communication, a compact frequency reconfigurable antenna for LTE/WWAN mobile handset applications was presented. The proposed antenna has a simple planar structure and a compact size of 36.5 × 10 mm2 . The proposed antenna operates in six modes by adjusting the bias states of two PIN diodes without any modifications to the radiating element. The proposed antenna can cover the LTE700/GSM850/900 bands in modes 1, 4, and 5, whereas the higher band of the proposed antenna is formed by modes 2, 3, and 6 to cover the GSM1800/1900/UMTS/LTE2300/2500 bands. Consequently, the proposed antenna can cover the LTE/WWAN operation bands. Good radiation characteristics for frequencies in the operating bands were observed. Therefore, the proposed antenna exhibits great potential for multiband mobile handset applications.

VIII. ACKNOWLEDGMENT

The authors would like to thank the anonymous reviewers of their paper for the many helpful suggestions. This work was supported by the Department of Electronics and Tele-Communication, BhivarabaiSawant Institute of Technology and Research, Wagholi.

REFERENCES

[1] Pham Trung Minh, To ThiThao, Nguyen TrongDuc, Vuvanyem,"A Novel Multband Frequency Reconfigurable PIFA Antenna," International Conference on Advanced Technologies for Communications (ATC), pp. 7-12, 2016
[2] Ashish Kumar Behera, MayankAgrawal and Manoj K. Meshram, "Frequency Reconfigurable Triple Wideband Antenna for Handheld Device," International Conference on Emerging Trends in Electrical, Electronics and Sustainable Energy Systems (ICETEESES-16), pp. 111-112, 2016, IEE
[3] M. Abou Al-alaa, Hala A. Elsadek, and Esmat A. Abdallah, "Effect of human head on frequency reconfigurable PIF
[4] James R. Kelly, "PIFA with Reconfigurable Frequency Bandwidth," pp. 2255-2256, 2015 IEEE
[5] Umar Johar, RifiqatHussain, Ali Muqaibel, Wajih Abu-Saud and Mohammad S.Sharawi, "An indoors AoA study for mobile phones utilizing frequency reconfigurable MIMO antennas," Jordan Conference on Applied Electrical Engineering and Computing Technologies (AEECT), 2015 IEEE.
[6] www.wikipedia.

©IJRASET (UGC Approved Journal): All Rights are Reserved

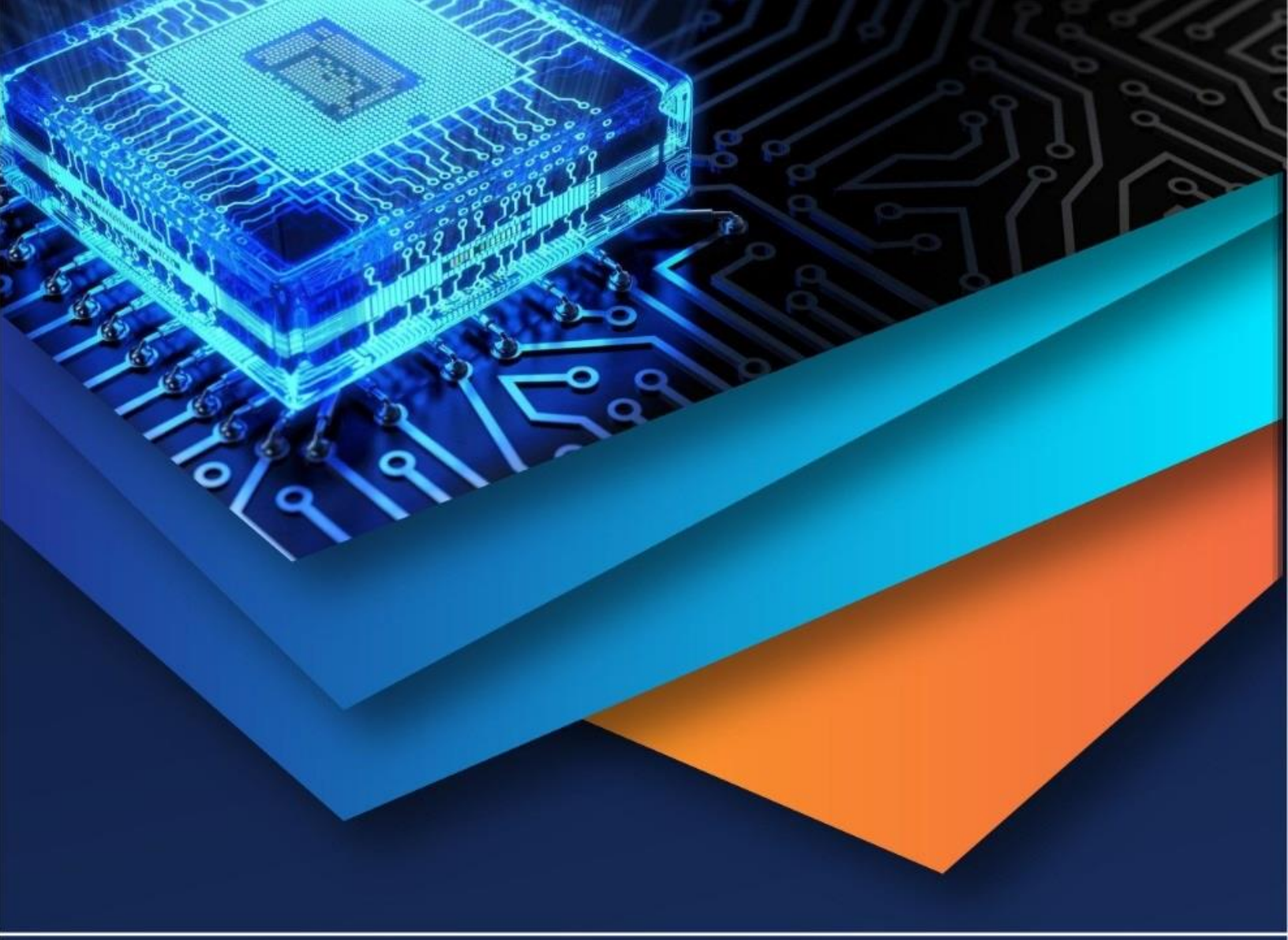

10.22214/IJRASET

45.98

IMPACT FACTOR: 7.129

IMPACT FACTOR: 7.429

INTERNATIONAL JOURNAL FOR RESEARCH

IN APPLIED SCIENCE & ENGINEERING TECHNOLOGY

Call : 08813907089 (24*7 Support on Whatsapp)