iJRASET
International Journal For Research in
Applied Science and Engineering Technology

INTERNATIONAL JOURNAL FOR RESEARCH

IN APPLIED SCIENCE & ENGINEERING TECHNOLOGY

Volume: CAAA-2018 **Issue:** onference **Month of publication:** April 2018

DOI:

www.ijraset.com

Call: 08813907089 | E-mail ID: ijraset@gmail.com

Design and Analysis of Eagle Wing

Siva. M[1], Shymila. SP[2], Ajay Kumar. R[3], Robert. M[4], Vibeeshan. W[5], Vinothkrishnan. S[6]

[1, 2, 3, 4, 5, 6]*Aeronautical Department, Dhanalakshmi Srinivasan College of Engineering and Technology, Mamallapuram, Chennai-603104.*

Abstract: The project is about to design and analysis the aircraft wing using eagle wing pattern. The project is inspired from Aquila nipalensis (steepe eagle).the eagle uses is special ability of tucking its tip feathers of its wing to reduce the turbulence similarly apply the eagle wing pattern in the aircraft wing and check the efficient of the wing. The airfoil used for the analysis is NACA 0012 which is a symmetrical airfoil. This pattern in the aircraft wing is efficient than the normal wing.

I. INTRODUCTION

Eagles are known very well for the flight they fly high up in sky to avoid turbulent weather conditions. They have very good feather arrangement which enables them to have perfect flight its feathers have perfect alignment to avoid the turbulence of flowing wind in extreme weather conditions this idea is chosen to apply the eagle wing pattern in the aircraft wing to enhance the flying condition of the aircraft.

II. LITERATURE SURVEY

A. Wing tucks are a response to atmospheric turbulence in the soaring flight of the steppe eagle (Aquila nipalensis)

We investigate the mechanics, occurrence and causation of wing tucking in a captive steppe eagle Aquila nipalensis, using ground based video and onboard inertial instrumentation. Statistical analysis of 2594 tucks, identified automatically from 45 flights, reveals that wing tucks occur more frequently under conditions of higher atmospheric turbulence.

B. Soaring and maneuvering flight of a steppe eagle Aquila nipalensis

The eagle's flight consisted of a more or less continuous sequence of banked turns, interrupted by occasional wing tucks and roll-over maneuvers, and ultimately terminated by a wing-over maneuver leading in to a diving landing approach.

C. Anatomy and Histochemistry of Spread-Wing Posture in Birds. 3. Immunohistochemistry of Flight Muscles and the "Shoulder Lock" in

D. Steppe Eagle migration strategies – revealed by satellite telemetry

The Steppe Eagle *Aquila nipalensis* is a long-distance migrant, breeding from southeast European Russia, east through the central Asian steppes to Manchuria in eastern China, and wintering in sub-Saharan Africa, the Arabian Peninsula, the Indian subcontinent and southwestern China.

E. Flight strategies of migrating raptors; a comparative study of Interspecific variation in flight characteristics

1) Work Plan

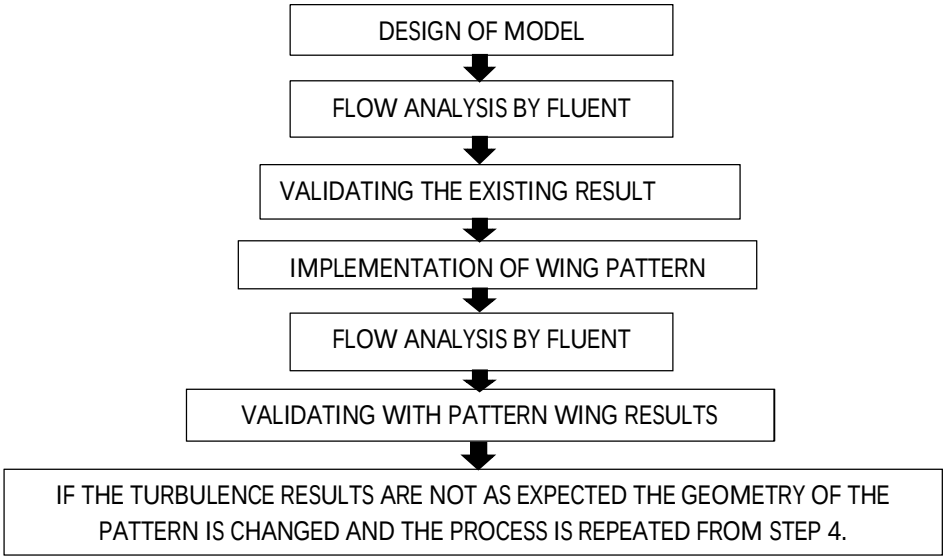

©IJRASET (UGC Approved Journal): All Rights are Reserved

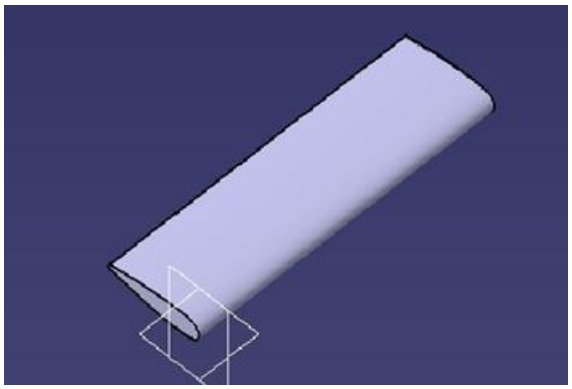

Fig.1. Design of the wing (NACA 0012)

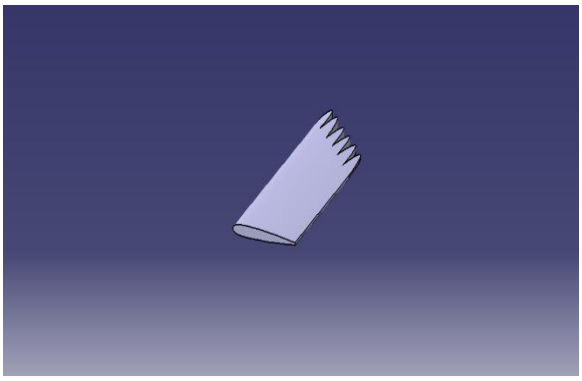

Fig.2. First design of the eagle patterned wing

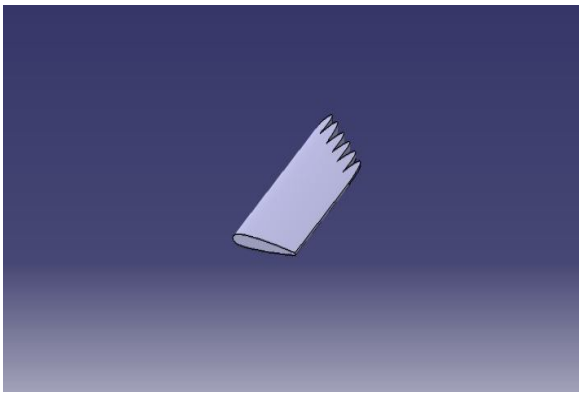

Fig.3.Second design of the eagle patterned wing

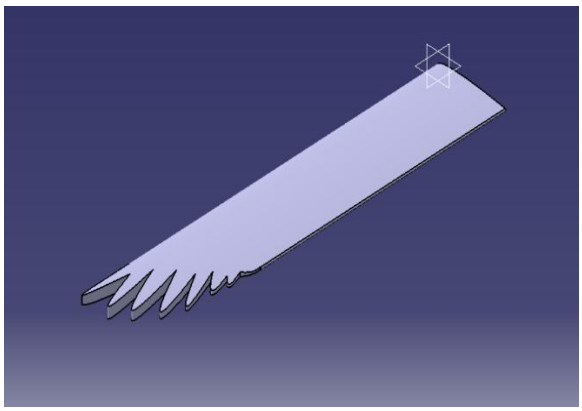

Fig.4.Third design of the eagle wing pattern

©IJRASET (UGC Approved Journal): All Rights are Reserved

F. Analysis of wing using CFD

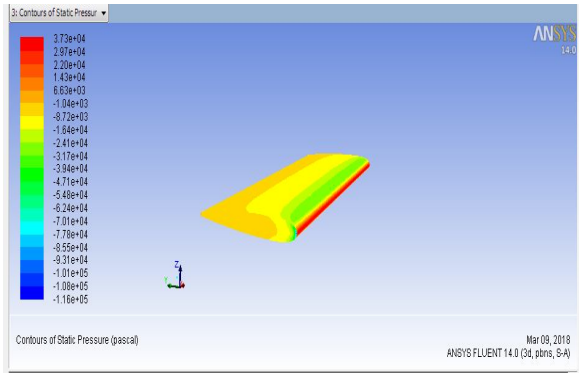

Fig1.1 pressure analysis of NACA 0012 wing

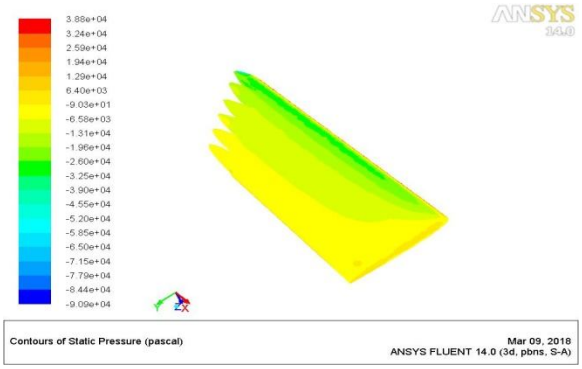

Fig.3.1.pressure analysis of second eagle patterned design

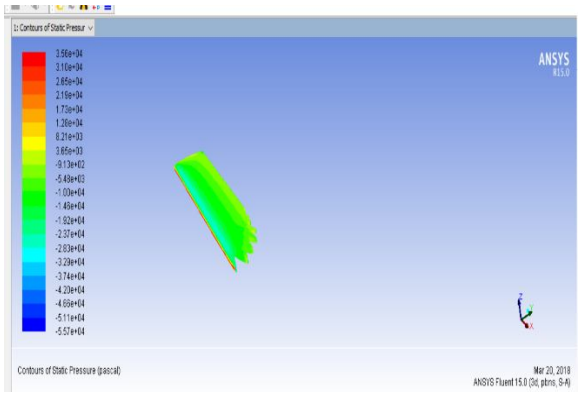

Fig.4.1.pressureanalysis of third eagle patterned design

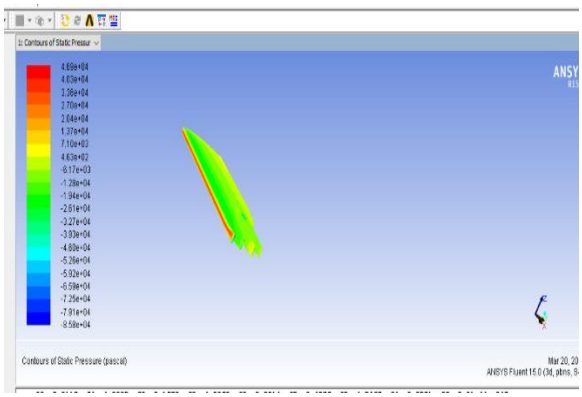

Fig.2.1.pressure analysis of first eagle patterned design

©IJRASET (UGC Approved Journal): All Rights are Reserved

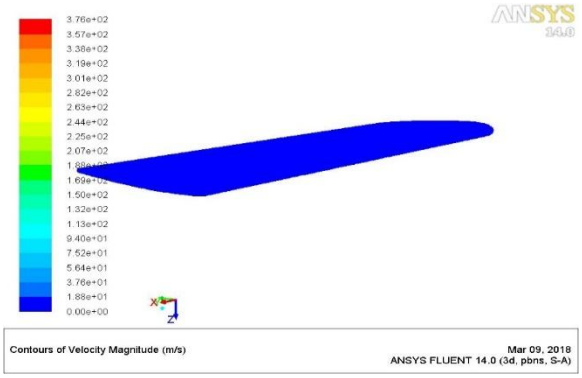

Fig1.2.velocity analysis of NACA 0012 wing

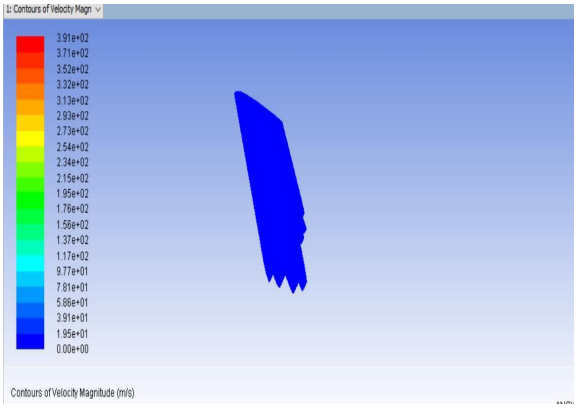

Fig.2.2.velocity analysis of first eagle patterned design

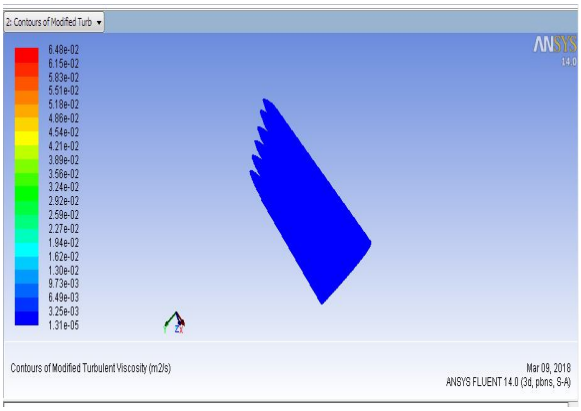

Fig.3.2 velocity analysis of second eagle patterned design

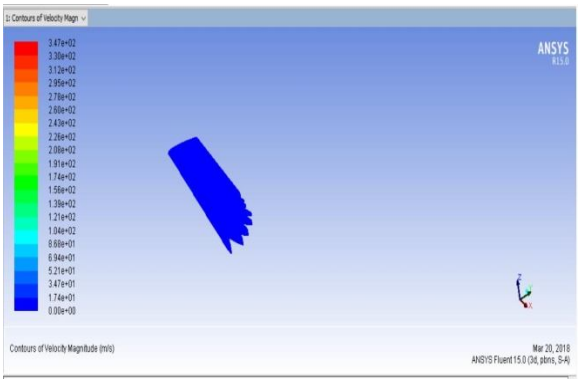

Fig.4.2 velocity analysis of third eagle patterned design

©IJRASET (UGC Approved Journal): All Rights are Reserved

G. Comparison Of Results

Wing name	Pressure (Pascal)	
	Min.	Max.
NACA 0012	-1.16e+05	3.73e+05
Designed wing 1	-8.58e+04	4.69e+04
Designed wing 2	-9.09e+04	3.88e+04
Designed wing 3	-5.57e+04	3.56e+04

Table.1.pressure comparison

Wing name	Velocity (m/s)	
	Min.	Max.
NACA 0012	0.00e+00	3.76e+02
Designed wing 1	0.00e+00	3.91e+01
Designed wing 2	0.00e+00	3.25e-03
Designed wing 3	0.00e+00	3.47e+02

Table.2. velocity comparison

Wing name	Turbulence (m^2/s)	
	Min.	Max.
NACA 0012	2.94116e-05	0.04809899
Designed wing 1	5.256088e-05	0.01769751
Designed wing 2	1.307964e-05	0.06478816
Designed wing 3	4.35594e-05	0.0443679

Table.3.turbulence comparison

III. CONCLUSION

From the above comparison we find that the turbulence is reduced in the first design compared to the other two models. This design has lesser turbulence compared to the wing NACA 0012.This design can also be used in aircraft wing to reduce the turbulence and increase the efficiency of the aircraft.

REFERENCES

[1] Kate V. Reynolds, Adrian L. R. Thomas and Graham K. Taylor (15th October 2014)Wing tucks are a response to atmospheric turbulence in the soaring flight of the steppe eagle (Aquila nipalensis).

[2] James A. Gillies, Adrian L. R. Thomas, Graham Taylor(25th august 2011) Soaring and maneuvering flight of a steppe eagle (Aquila nipalensis).

[3] Albatrosses -Ron A. Meyers and Eric F. Stakebake(9th November 2004) Anatomy and Histochemistry of Spread-Wing Posture in Birds. 3Immunohistochemistry of Flight Muscles and the "Shoulder Lock" in

[4] Bernd-Ulrich Meyburg, Christiane Meyburg and Patrick Paillat (2012) Steppe Eagle migration strategies – revealed by satellite telemetry

[5] Flight strategies of migrating raptors; a comparative study of interspecific variation in flight characteristics (1997).

©IJRASET (UGC Approved Journal): All Rights are Reserved

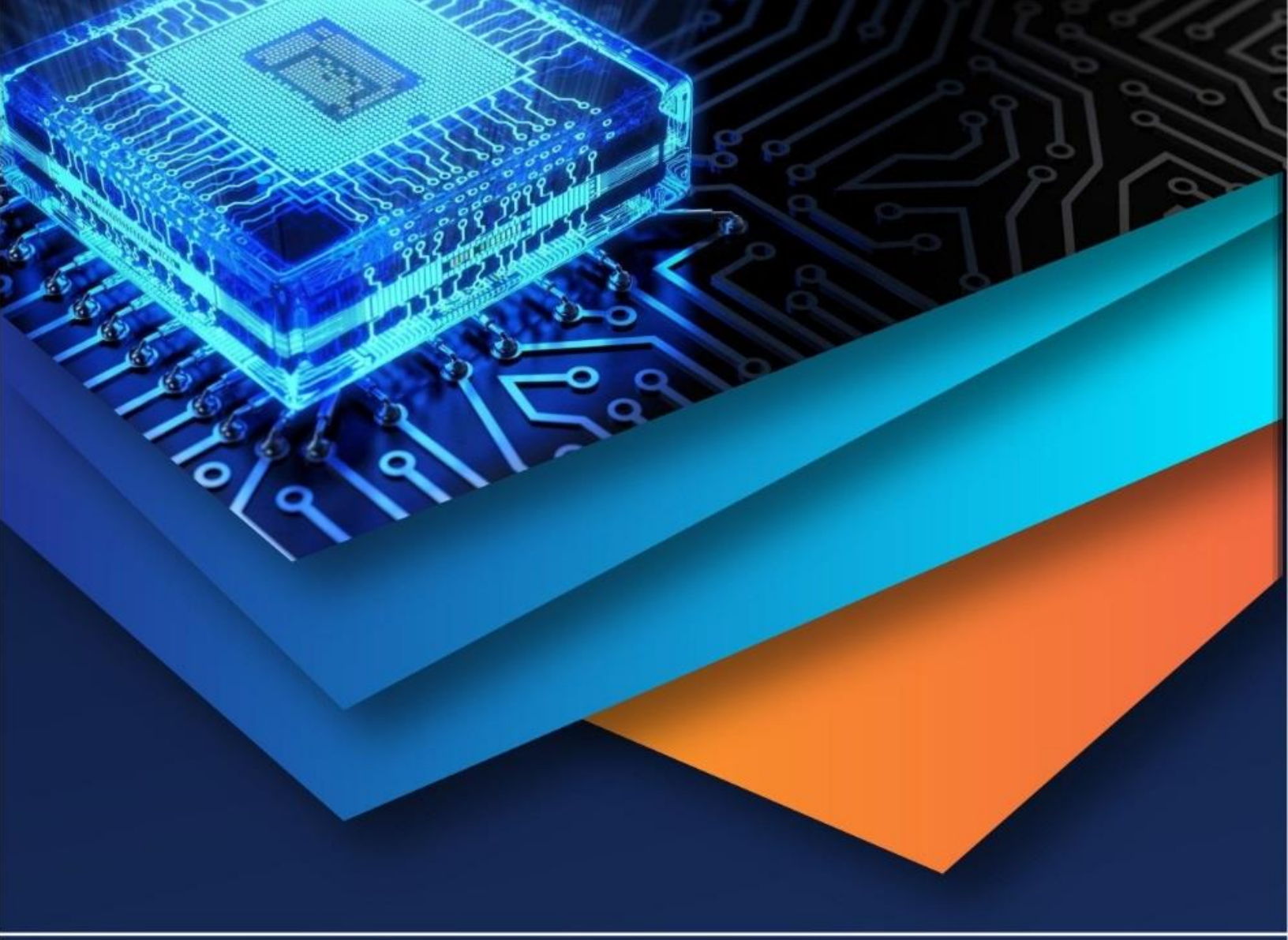

10.22214/IJRASET

45.98

IMPACT FACTOR: 7.129

IMPACT FACTOR: 7.429

INTERNATIONAL JOURNAL FOR RESEARCH

IN APPLIED SCIENCE & ENGINEERING TECHNOLOGY

Call : 08813907089 (24*7 Support on Whatsapp)