iJRASET
International Journal For Research in Applied Science and Engineering Technology

INTERNATIONAL JOURNAL FOR RESEARCH

IN APPLIED SCIENCE & ENGINEERING TECHNOLOGY

Volume: 6 **Issue:** VI **Month of publication:** June 2018

DOI: http://doi.org/10.22214/ijraset.2018.6186

www.ijraset.com

Call: 08813907089 | E-mail ID: ijraset@gmail.com

International Journal for Research in Applied Science & Engineering Technology (IJRASET)
ISSN: 2321-9653; IC Value: 45.98; SJ Impact Factor: 6.887
Volume 6 Issue VI, June 2018- Available at www.ijraset.com

Response of Seismic Loading on Regular High Rise Building with and without Damper using ETABS

S.M.Samrutwar[1], D.P.Telang
[1]*G. H. Raisoni Academy of Engineering &Tech., Nagpur, MH, India. Nagpur University, Nagpur, India.*
[2] *H. Raisoni Academy of Engineering, &Tech., Nagpur, MH, India. Nagpur University,Nagpur, India*

Abstract: ***The current trend toward building of ever increasing heights and the use of lightweight, high strength materials, and advanced construction techniques have led to increasingly flexible and lightly damped structures. In this study a tuned mass damper proposed as energy dissipation devices for buildings subjected to earthquake loads. To reduced the response of displacement the tuned mass damper are introduced as energy dissipation devices. In this study the Response spectrum analysis and equivalent static analysis are used. ETABS 2015 is used for modeling and analysis the structure. The analytical models created by ETABS software with and without Tuned mass damper to study the behavior of the building and the responses of it after subjected to earthquake load. In this study G+12 storey multi-storied building with and without damper is created. The damper is provided on top of the building. The tuned mass damper is provided with different mass ratio i.e 1%, 1.5% and 2% respectively. The building is located in zone V.***

Keywords: Response spectrum method, ETABS , Tuned mass damper, Seismic load.

I. INTRODUCTION

Earthquakes are the most unpredictable and devastating of all natural disasters, which are very difficult to save over engineering properties and life, against it. Hence in order to overcome these issues we need to identify the seismic performance of the built environment through the development of various analytical procedures, which ensure the structures to withstand during frequent minor earthquakes and produce enough caution whenever subjected to major earthquake events. So that can save as many lives as possible. There are several guidelines all over the world which has been repeatedly updating on this topic. of tall and super tall buildings. But, it should be made a routine design practice to design the damping capacity into a structural system while designing the structural system. Now a-days several techniques are available to minimize the vibration of the structure. Efforts have led to development of techniques like base isolation, active control and passive control devices. Base isolation technique is shown to be quite effective and it requires insertion of isolation device at the foundation level, which may require constant maintenance.

A. Major Techniques to Control Vibration

Now a-days several techniques are available to minimize the vibration of the structure. Efforts have led to development of techniques like base isolation, active control and passive control devices. Base isolation technique is shown to be quite effective and it requires insertion of isolation device at the foundation level, which may require constant maintenance. Active control techniques turn out to be quite costly for buildings, as they need continuous power supply. In developing countries like India, such control devices can become popular only if they are easy to construct. Their design method is compatible with present practices and shall not require costly maintenance. With the aim of developing such a simple control device, some studies have been undertaken in last couple of years. In these studies a simple type of Tuned Mass Damper (TMD) is proposed.

A tuned mass damper (TMD) is a passive energy dissipation device, consists of a mass, spring, and a damper, connected to the structure in order to reduce the dynamic vibrations induced by wind or earthquake loads. The soft storey will be made up of steel and its columns, beams, and slab sizes will be smaller than columns, beams, and slab sizes other stories of the building. The height, member sizes of soft storey will be devised based on the principle of TMD i.e. the natural frequency of TMD (soft storey) should have same natural frequency as that of main building.The selection of a particular type of vibration control device is governed by a number of factors which include efficiency, compactness and weight, capital cost, operating cost, maintenance requirements and safety.TMD is attached to a structure in order to reduce the dynamic response of the structure. The frequency of the damper is tuned to a particular structural frequency so that when that frequency is excited, the damper will resonate out of phase with the structural motion. The mass is usually attached to the building via a spring-dashpot system and energy is dissipated by the dashpot as relative

©IJRASET: All Rights are Reserved

motion develops between the mass and the structures. The most of structural system designed to carry vertical load may not have the capacity to resist lateral load or even if it has, the design of lateral load will increase the structural cost substantially with increase in number of storey. As the seismic load acting on a structure is a function of the self-weight of the structure these structures are made comparatively light and flexible which have relatively low natural damping. Results make the structures more vibration prone under wind, earthquake loading. New generation high rise building is equipped with artificial damping device for vibration control through energy dissipation. The various vibration control methods include passive, active, semi-active, hybrid. Various factors that affect the selection of a particular type of vibration control device are efficiency, compactness and weight, capital cost, operating cost, maintenance requirements and safety.

II. LITERATURE REVIEW

John R. Sladek and Richard E. Klingner(1983)[1], study is to investigate whether or not TMD or similar devices could be used to reduce the response of structures toearthquake ground motions. The term tuned-mass damper is commonly applied to a wide variety of vibration absorbers, the typical TMD consists of a mass, Mr , which can move freely relative to the primary structure, and is attached to the structure by a linear elastic spring of stiffness *KT*, in parallel with a dashpot, CT. [2]The optimum TMD frequency wr is that which minimizes the primary structure's response, while optimum damping is that value of *CT* which maximizes the energy dissipated per cycle by the TMD. Using a TMD mass ratio of 0.65% (i.e., a first-mode effective mass ratio of 0.026), it was found that the optimum TMD made no contribution towards reducing the maximum lateral forces at the base of the building. Based on these results, vibration absorbers do not seem effective in reducing the maximum seismic response of tall buildings.

Paper[3] presents the results of some of measurements, including the natural frequencies and damping levels of the first and second mode vibrations, showing the effectiveness of the water tank TMD and the secondary damper in increasing damping levels. The Sydney tower is one of the first building with the installation of a large scale TMD. For natural frequencies and damping measurements, two accelerometers were installed in the tower , each accelerometer has a pair of sensor perpendicular to each other and at north-south and east-west directions. Wind induced acceleration were recorded on magnetic tape using an FE tape recorded [4]The recorded signals were analyzed by a digital computer to determine the natural frequencies of vibrations and damping level. It concluded that spectral density functions of wind-induced acceleration responses of Sydney Tower identify natural frequencies of vibration of 0.1Hz and 0.5Hz for the first mode and second mode resp. The response showed that the water tank TMD produces moderate increases in the damping levels of the first mode and second mode, and the secondary damper causes a substantial increases in the damping level of the second mode. discusses a methodology for designing multiple tuned mass damper (TMD)[4] systems for reducing building response motion. The technique is based on extending the classic work of Den Hartogfrom a single degree of freedom to multiple degree of freedom. Conclusion of earlier worker on the effectiveness of single first mode TMD are verified and multiple TMD systems are evaluated. Simplified, linear mathematical models were excited with the EL Centro 1940 N-S earthquake record. Significant motion reduction was achieved using the design technique. And conclusion is that, multiple passive tuned mass damper systems designed by modal and Den Hartog analysis give motion reductions between 40% and 60% for a 5% increase in the mass of the building[6]. presentthe practical application of Tuned Mass Control Systems (TMCS) for earthquake protection. Optimization approaches for these passive control systems will be discussed as well as practical considerations regarding the resulting specification of the TMCS such as stiffness loss during an earthquake and wide-band effectiveness. The contribution also introduces the practical application of TMCS at an elevated bridge structure and presents design solutions for these systems[7].The introduced methods will be compared with numerical calculation of an example Multi Degree of Freedom (MDOF) – structure to verify the numerical optimization approach. Additionally the resulting specification shall be discussed under practical considerations. The objective of this theoretical analysis is the optimum design of the TMCS equipment for an elevated bridge structure by using the generalized results. Supplementary a FE-model of the bridge structure has been used to verify the effectiveness of the specified system and effects for practical considerations have been assessed. The[8] results of the numerical analysis and the design of the actual TMCS units will be introduced in this contribution. To achieve the highest effectiveness possible for a Tuned Mass Control System (TMCS) for earthquake protection that is supposed to be installed at an elevated bridge structure in Guadalajara/ Mexico, theoretical approaches have been introduced and several numerical studies have been done to verify the optimum specification of the control system. It was shown that the application of a TMCS leads to a significant reduction of the structural response. Depending on the free-vibration participation of the structural response, the optimum reduction can be achieved with the Den Hartog Criteria or with recommended higher internal damping ratios of the TMCS. Practical considerations showed, that a higher internal damping leads to a more robust specification in terms of varying structural stiffness and inherent damping. **[9]**Present the seismic analysis of multistoried building with TMD. After analyzing a six storied building with rectangular

©IJRASET: All Rights are Reserved

shape by using FE software SAP 2000. Responses in the form of displacement, axial force & bending moment are noted. Simple TMD with optimum frequency ratio, provided in the form of soft storey at building top is found to be effective in reducing seismic response of building. In[10] general, a soft storey at the top of building reduces top building deflection by about 10 to 50% Tuned mass damper in the form of soft storey of RCC is found to be effective in reducing seismic forces at critical locations like footing level and first floor level. Among 2% & 3% TMDs, 3% TMD is found better than 2% and 3% TMDs in reducing axial force, bending moment and displacement.

III. MODELLING

A. Building Discription

The model of multi-storied G+12 storey RCC structure considered for the analysis. The building is symmetrical in plane. The building has bay width of 5m in X and Y direction with 3.5m storey height. Base floor height is 4.5m. Tuned mass damper is installed at the top of building. Analysis is carried out in ETABS software by Response Spectrum Analysis and Equivalent static analysis. A G+12 story multi-storied building is situated in Zone V on medium grade soil is analyzed and the displacement and acceleration with and without TMD of the structure due to different load combination are obtained. Seismic analysis is performed using response spectrum method given in IS1893:2002. For the modeling of the G+12 storey structure, following parameters are considered shown in below table I

Table I. Parameter of building

SR.NO.	CONTENT	DESCRIPTION
1.	Number of storey	G+12
2.	Floor height	3.5m
3.	Base floor height	4.5m
4.	Wall thickness	230mm
5.	Imposed load	3Kn/m2
6.	Size of column	450mm×450mm
7.	Size of beam	450mm×300mm
8.	Depth of slab	125mm
9.	Types of soil	Medium soil
10.	Seismic zone	V
11.	Zone factor	0.36
12.	Response of spectra As per IS1893(Part 1):2OO2 for 5% damping	
13.	L.L. On top	1.5 Kn/m²

Typical plan of G+12 multi-storied building shown in fig. 1

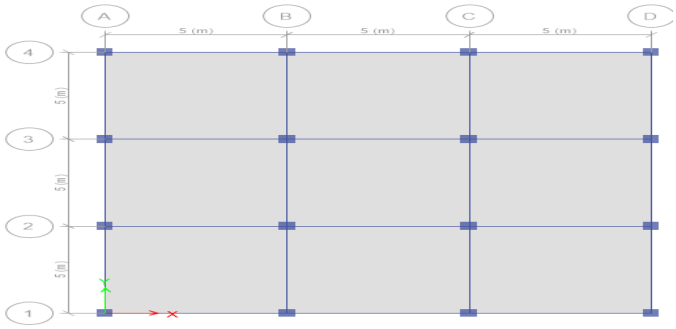

Fig. 1 Plan of G+12 multi-storied building

Fig. 2 shows the Plan and 3D view of G+12 multi-storied building without TMD

©IJRASET: All Rights are Reserved

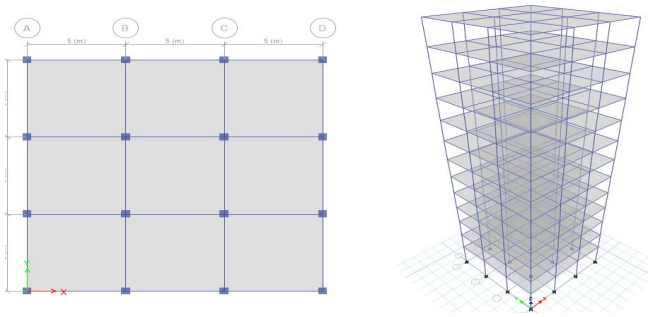

Fig. 2 Plan and 3D view of G+12 multi-storied building without TM

Following load combinations are taken:

1) 1.5(DL+EQX)
2) 1.5(DL+EQY)
3) 1.5(DL-EQX)
4) 1.5(DL-EQY)
5) 1.2(DL+LL+EQX)
6) 1.2(DL+LL+EQY)
7. 1.2(DL+LL-EQX)
8. 1.2(DL+LL-EQY)
9. 0.9DL+1.5EQX
10. 0.9DL-1.5EQX
11. 0.9DL+1.5EQY
12. 0.9DL-1.5EQY

B. Optimum Parameter of tmd

The soft storey parameter are calculated on the principle of TMD that is natural frequency of TMD should have same the natural frequency as that of main building. Sizes of TMD are reduces to normal building sizes. Calculations are done by the analytically.

The optimum TMD parameter and damping, frequency (f) and damping ratio (ε) are given equation [15]

F=11+μ and ε=3μ8 (1+μ)

Where, μ is the effective mass ratio that is,

μ=Md Ms

Md is the mass of TMD,

Ms is normalized modal mass of TMD

Calculation for the mass ratio of 1% of TMD is given below.

Total mass of main building = 1804690.978KG

Total mass of TMD = 18046.910KG

μ=0.0

F =0.99

Optimum value of stiffness can be calculated by,

KD = 4π2μf2MsTs2

Ts are the time period of building.

For the first mode time period of the building with TMD for 1% mass ratio is 2.02sec.

Kd = 171335.4377

1) *Characteristics of Tunned mass damper:* The TMD parameter of Different mass ratio is given in below table II .From the principal of TMD, with different mass ratio of TMD with main building sizes of TMD are given in below table III.

Table. II tmd parameter of different mass ratio

Mass Ratio	Frequency	Damping ratio	Stiffness
1%	0.493	0.095	171335.45
1.5%	0.491	0.1172	254477.34
2%	0.488	0.1324	335984.78

©IJRASET: All Rights are Reserved

Table III. Different mass ratios of tmd with main building

Sr. No.	Description	Mass Ratio of TMD with main building in %		
		1%	1.5%	2%
1.	Column Section	120MM	150MM	170MM
2.	Beam Section	120X540	150X480	170X530
3.	Storey Height (m)	5.55	7.38	8.1

2) Modeling of TMD For Different Mass Ratio: In this we are considering the model of TMD for different mass ratio i.e 1%, 1.5% and 2%. The TMD can be applied on top of the building. Fig 3,Fig 4 and fig 5 shows the model of TMD with 1%,1.5% and 2%.

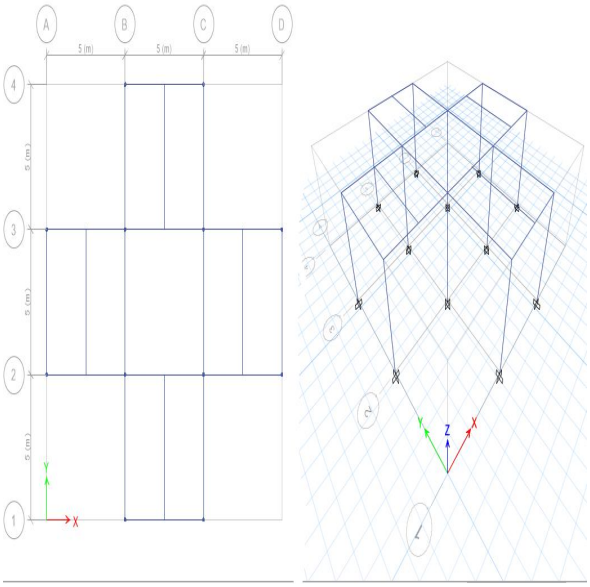

Fig. 3 Model of TMD for 1% mass ratio

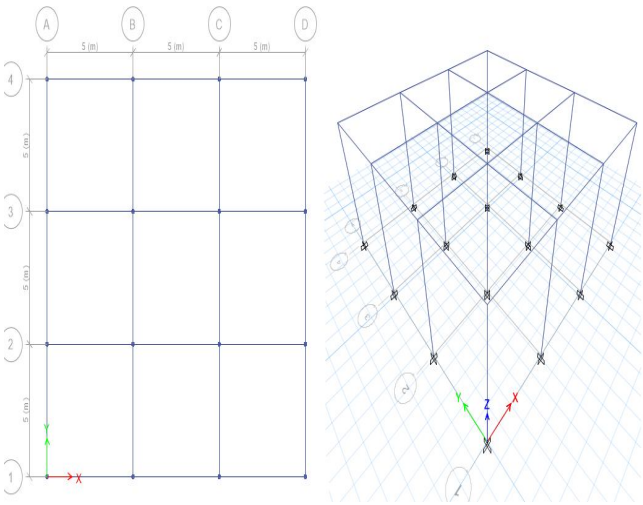

Fig. 4 Model of TMD for 1.5% mass ratio

©IJRASET: All Rights are Reserved

ISSN: 2321-9653; IC Value: 45.98; SJ Impact Factor: 6.887
Volume 6 Issue VI, June 2018- Available at www.ijraset.com

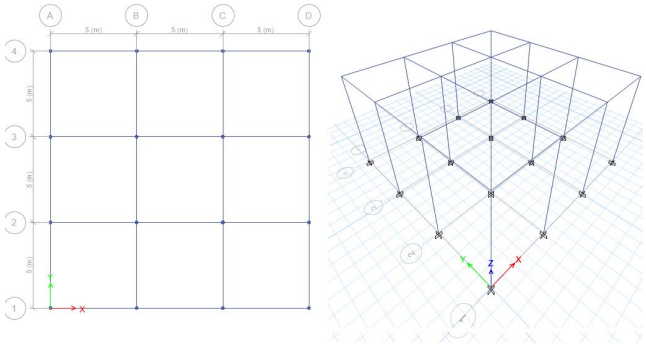

Fig 5 Model of TMD for 2% mass ratio

3) Model of G+12 muilti-Storied Building with TMD: In this the fig 6 , fig 7, and fig 8 shows the model of G+12 muilti-storied building with 1%, 1.5% and 2% mass ratio.

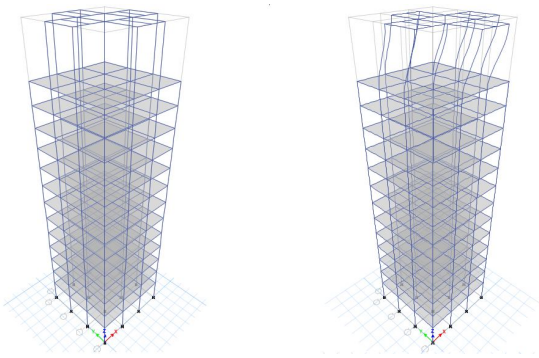

Fig. 6 3D view & model shape of G+12 building with 1% mass ratio

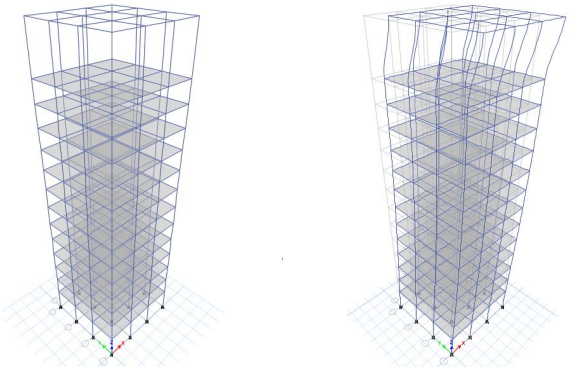

Fig. 7 3D view & model shape of G+12 building with 1.5% mass ratio

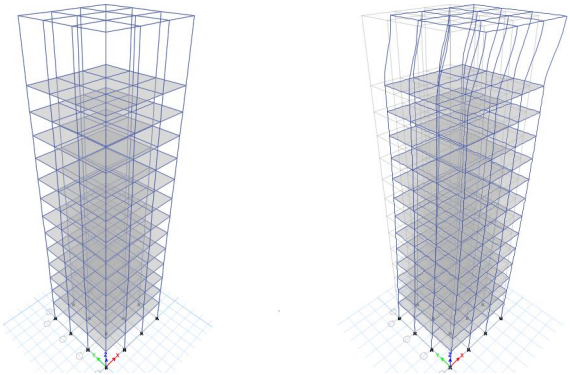

Fig. 8 3D view & model shape of G+12 building with 2% mass ratio

©IJRASET: All Rights are Reserved

In this Section problem is defined for the present study. Modeling of building with and without TMD is also discussed in this section. Also the parameters of building and the parameters of TMD is also discussed.

IV. RESULTS AND DISCUSSION

A. General

A G+12 multi-storied building in zone V is modeled using ETAB software and the result are computed. The configuration of all the models are discussed in previous chapter. Model of G+12 muilti-storied building with and without TMD for different mass ratio is prepared. These models are analyzed and designed as per specification of Indian standard codes IS 1893.The response spectrum analysis & equivalent static analysis has been used to find the design lateral forces.

B. Effect of Mass Ratio

In this discussion comparison is carried out for each mode with different mass ratios. It is observed that, time periods increases as the mass ratio increases and displacement decreases

Table IV. Comparison of natural periods for G+12 storey building

Sr. No.	No. of Mode	Time period Normal Building (sec)	Time period of Building with TMD (sec)		
			1%	1.5%	2%
1.	1.	2.019	3.567	2.214	2.247
2.	2,	2.019	3.566	2.214	2.247
3.	3.	1.724	3.052	1.963	1.986
4.	4.	0.661	2.01	1.87	1.859
5.	5.	0.661	2.01	1.87	1.859
6.	6.	0.568	1.72	1.641	1.629
7.	7.	0.379	0.661	0.66	0.66
8.	8.	0.379	0.661	0.66	0.66
9.	9.	0.332	0.653	0.615	0.568
10.	10.	0,261	0.608	0.568	0.552
11,	11.	0.261	0.575	0.427	0.381
12,	12.	0.23	0.571	0.427	0.381

C. Displacement

The equivalent static analysis and response spectrum mehod is adopted for seismic analysis in ETAB 2015. The Table V shows displacement for G+12 multi-storied building with and without TMD .It shows the maximum displacement 105.7 mm for building with 1% mass ratio and the minimum displacement 9.9mm for building with 2% mass ratio

Table v. Displacement of g+12 storey building for different mass ratio

G+12 Storey without TMD	Building with 1% TMD	Building with 1.5% TMD	Building with 2% TMD
DISPLACEMENT MM	DISPLACEMENT MM	DISPLACEMENT MM	DISPLACEMENT MM
103.2	105.7	103.7	103.9
101.1	103.3	101.3	101.4
97.4	99.4	97.5	97.5
92.1	93.9	92.1	92.1

©IJRASET: All Rights are Reserved

85.5	87.1	85.4	85.3
77.8	79.2	77.6	77.5
69.2	70.4	69	68.9
59.9	61	59.7	59.7
50.2	51.1	50.1	50
40.3	40.9	40.1	40
30.1	30.6	30	30
20	20.3	19.9	19.9
10	10.2	10	9.9

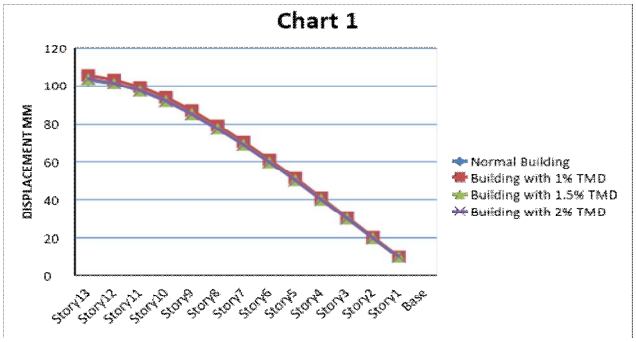

Fig. 9 Displacement of G+12 storey building With and Without TMD

Fig. 9 shows a graph of displacement for G+12 storey multi-storied building with and without TMD .It has been seen that as the height increases displacement increases.

D. Storey Drift

The equivalent static analysis and response spectrum mehod is adopted for seismic analysis in ETAB 2015. The Table No. 4.3. shows displacement for G+12 multi-storied building with and without TMD .It shows the maximum storey drift 103.9 mm for building with 2% mass ratio.

Table.Vi Story Drift Of G+12 Storey Building For Different Mass Ratio

G+12 Storey without TMD	Building with 1% TMD	Building with 1.5% TMD	Building with 2% TMD
STOREY DRIFT	STOREY DRIFT	STOREY DRIFT	STOREY DRIFT
0.000613	0.000679	0.000684	103.9
0.001053	0.001111	0.001102	101.4
0.001506	0.001562	0.001541	97.5
0.001894	0.001949	0.001916	92.1
0.002208	0.002263	0.002222	85.3
0.002455	0.002509	0.002461	77.5
0.00264	0.002693	0.00264	68.9
0.00277	0.002823	0.002766	59.7
0.002853	0.002905	0.002846	50
0.002895	0.002946	0.002885	40
0.002898	0.002948	0.002887	30
0.002853	0.002901	0.00284	19.9
0.002222	0.00226	0.002212	9.9
0	0	0	0

©IJRASET: All Rights are Reserved

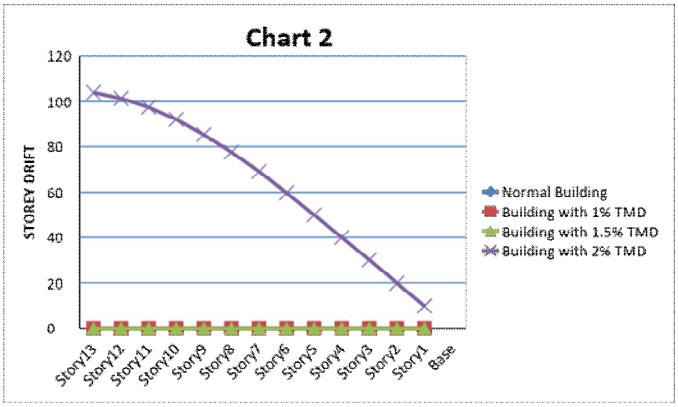

Fig. 10. storey drift of G+12 storey building With and Without TMD

Fig. 10 shows a graph of storey drift for G+12 storey multi-storied building with and without TMD .It has been seen that building with 2% mass ratio has the greater value of storey drift.

E. Base Shear

The equivalent static analysis and response spectrum method is adopted for seismic analysis in ETAB 2015. The Table No.5.4. shows base shear for G+12 multi-storied building with and without TMD .It shows the maximum base shear 689.08 kn for building with 1% mass ratio.

Table VII Base Shear of G+12 storey building for different mass ratio

G+12 Storey without TMD	Building with 1% TMD	Building with 1.5% TMD	Building with 2% TMD
BASE SHEAR KN5	BASE SHEAR KN	BASE SHEAR KN	BASE SHEAR KN
677.84	689.08	674.66	673.75

F. Acceleration

The equivalent static analysis and response spectrum method is adopted for seismic analysis in ETAB 2015. The Table VIII. Shows acceleration for G+12 multi-storied building with and without TMD .It shows the maximum acceleration 409.62m/sec2 for building with 1.5% mass ratio and minimum acceleration 77.69mm/sec2 for building with 1 % mass ratio

Table.Viii Acceleration Of G+12 Storey Building For Different Mass Ratio

G+12 Storey without TMD	Building with 1% TMD	Building with 1.5% TMD	Building with 2% TMD
Accelerations mm/sec²	Accelerations mm/sec²	Accelerations mm/sec²	Accelerations mm/sec²
444.23	291.15	409.62	409.37
375.71	273.6	362.46	362.14
284.7	241.37	283.76	283.15
268.52	200.74	233.12	232.34
298	168.13	257.21	256.69
299.52	162.71	293.46	293.17

©IJRASET: All Rights are Reserved

296.11	184.27	288.9	288.63
302.27	212.23	257.04	256.74
292.48	228.62	255.48	255.36
295.4	224.04	296.58	296.79
333.52	195.46	319.14	319.56
326.54	144.7	276.23	276.65
210.37	77.69	162.69	162.95
0	0	0	0

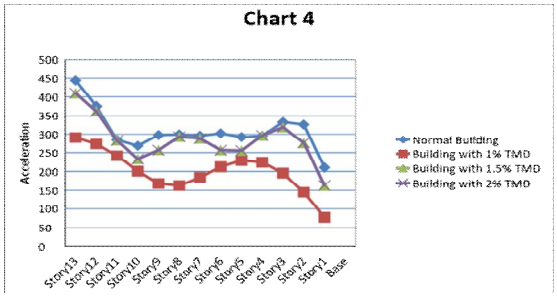

Fig. 11 Acceleration of G+12 storey building for With and Without TMD

Figure.11 shows a graph of acceleration for G+12 storey multi-storied building with and without TMD. It has been seen that the acceleration is reduced by 34.45%. for 1% mass ratio as compared to building without TMD.

G. Modal Period And Frequency

The equivalent static analysis and response spectrum method is adopted for seismic analysis in ETAB 2015. The Table 9, 10 ,11,12 shows modal period and frequency for G+12 multi-storied building with & without TMD for different mass ratio. It shows that time period of building with TMD is more than building without TMD. Also as time period increased frequency decreased.

Table ix. Modal period and frequency g+12 storey for building without tmd

Case	Mode	Period	Frequency	Circular Frequency	Eigenvalue
		sec	cyc/sec	rad/sec	rad²/sec²
Modal	1	3.092	0.323	2.0323	4.1302
Modal	2	3.092	0.323	2.0323	4. 1302
Modal	3	2.676	0.374	2.3477	5.5118
Modal	4	1.011	0.989	6.2138	38.6114
Modal	5	1.011	0.989	6.2138	38.6114
Modal	6	0.88	1.137	7.143	51.0222
Modal	7	0.579	1.726	10.8453	117.6204
Modal	8	0.579	1.726	10.8453	117.6204
Modal	9	0.514	1.947	12.2344	149.6803
Modal	10	0.398	2.513	15.7903	249.3332
Modal	11	0.398	2.513	15.7903	249.3332
Modal	12	0.354	2.824	17.7407	314.7341

Table. X modal period and frequency g+12 storey for building with tmd for 1% mass ratio

©IJRASET: All Rights are Reserved

Case	Mode	Period	Frequency	Circular Frequency	Eigenvalue
		sec	cyc/sec	rad/sec	rad²/sec²
Modal	1	3.135	0.319	2.0043	4.0173
Modal	2	3.135	0.319	2.0043	4.0173
Modal	3	2.715	0.368	2.3141	5.3549
Modal	4	2.04	0.49	3.0802	9.4873
Modal	5	2.04	0.49	3.0802	9.4873
Modal	6	1.847	0.541	3.4012	11.5683
Modal	7	1.009	0.991	6.2261	38.7647
Modal	8	1.009	0.991	6.2261	38.7647
Modal	9	0.878	1.138	7.1524	51.1563
Modal	10	0.579	1.726	10.8448	117.6092
Modal	11	0.579	1.726	10.8448	117.6092
Modal	12	0.552	1.812	11.3869	129.6624

Table Xi Modal Period And Frequency Of G+12 Storey Building With Tmd For 1.5% Mass Ratio

Case	Mode	Period	Frequency	Circular Frequency	Eigenvalue
		sec	cyc/sec	rad/sec	rad²/sec²
Modal	1	3.125	0.32	2.0105	4.0419
Modal	2	3.125	0.32	2.0105	4.0419
Modal	3	2.707	0.369	2.3212	5.3882
Modal	4	2.029	0.493	3.0969	9.5907
Modal	5	2.029	0.493	3.0969	9.5907
Modal	6	1.847	0.542	3.4025	11.5773
Modal	7	1.01	0.991	6.224	38.7387
Modal	8	1.01	0.991	6.224	38.7387
Modal	9	0.879	1.138	7.151	51.1361
Modal	10	0.615	1.627	10.224	104.5304
Modal	11	0.579	1.726	10.8456	117.6281
Modal	12	0.579	1.726	10.8456	117.6281

©IJRASET: All Rights are Reserved

Table Xii Modal Period And Frequency Of G+12 Storey For Building With Tmd For 2% Mass Ratio

Case	Mode	Period	Frequency	Circular Frequency	Eigenvalue
		sec	cyc/sec	rad/sec	rad²/sec²
Modal	1	3.135	0.319	2.0043	4.0173
Modal	2	3.135	0.319	2.0043	4.0173
Modal	3	2.715	0.368	2.3141	5.3549
Modal	4	2.04	0.49	3.0802	9.4873
Modal	5	2.04	0.49	3.0802	9.4873
Modal	6	1.847	0.541	3.4012	11.5683
Modal	7	1.009	0.991	6.2261	38.7647
Modal	8	1.009	0.991	6.2261	38.7647
Modal	9	0.878	1.138	7.1524	51.1563
Modal	10	0.579	1.726	10.8448	117.6092
Modal	11	0.579	1.726	10.8448	117.6092
Modal	12	0.552	1.812	11.3869	129.6624

This section clearly states about the result obtained after the analysis of the Model with TMD and without TMD. The results for Storey drift, Base shear, Displacement, Acceleration, Frequency are calculated for different models. Graphical representations and Tables for elaborating the values are made in this section

V. CONCLUSION

This paper presents a summary of the study, for regular high rise building with and without damper, for seismic zone v. The effect of seismic load has been studied for the building for different mass ratio of TMD. On the basis of the results following conclusions have been drawn:

A. Followings are the Conclusion Obtained From Results

1) The reduction in accelerations of building by 34.45%.
2) The reduction in Natural frequency of building by 13.93%.
3) The increasing of Natural time period by 13.968% Concrete TMD with optimum frequency ratio, provided in the form of soft storey at building top is found to be effective in arresting seismic response of building.
4) Seismic performance of building after application of damper is much better when we provide to top storey.
5) It has been found that the TMD can be successfully used to control vibration of the structure.
6) For storey drift which is important behavior for finishes such as sliding windows, performance is better for building with TMD.
7) With the using of TMD in the structure, the base shear slightly increases.
8) The TMD can efficiently reduce the response for mass ratio 1%.It is found to be in effective for mass ratios greater than 1%.

Future study linear analysis is done. This provided a further scope to study this problem using a nonlinear model for TMD as well as for structure.Further scope also includes studying the possibility of constructing Active TMD. In future scope we can also placed the TMD on different positions.This Analysis can be done by Response Spectrum Method in future scope it can be done by Time history Method.

VI. ACKNOWLEDGMENT

The authors would like to thank the Department of Civil Engineering of G. H. Raisoni Academy of Engineering, &Tech.,Nagpur, MH, India. for their generous support.

REFERENCES

[1] John R.sladek and Richard E. Klingner, (1983) "Effect of tuned-mass dampers on seismic response.", Journal of structural engineering 109, no. 8: 2004-2009.
[2] Kenny C.S. Kwok (1984) "Damping increase in building with tuned mass damper."Journal of Engineering Mechanics 110, no. 11: 1645-1649.

©IJRASET: All Rights are Reserved

[3] Clark, Allen J. (1988) "Multiple passive tuned mass damper for reducing earthquake induced building motion." In Proc., 9" World Conf.On Earthquake Engrg, vol. 5, pp. 779-784.
[4] Fahim Sadek, Bijan Mohraz (1997) "A method of estimating the parameters of tuned mass dampers for seismic applications." Earthquake engineering and structural dynamics 26.6 617-636.
[5] Rana, Rahul, and T. T. Soong. (1998) "Parametric study and simplified design of tuned mass dampers." Engineering structures 20, no. 3 : 193-204.
[6] Chen, Genda, and Jingning Wu. (2001) "Optimal placement of multiple tune mass dampers for seismic structures." Journal of Structural Engineering 127, no. 9 1054-1062.
[7] MEINHARDT, Christian. (2008) "Increase of a high rise buildings damping behaviour by applying Large Scale Tuned Mass Dampers." International Association for Bridge and Structural Engineering,.In IABSE Congress Report, vol. 17, no. 28, pp. 68-69.
[8] Meinhardt, Christian, and Daniel Siepe. (2010) "Application of Tuned Mass Control Systems for Earthquake Protection."International Association for Bridge and Structural Engineering, In IABSE Symposium Report, vol. 97, no. 18, pp. 32-39.
[9] Thakur, V. M., and P. D. Pachpor. (2012) "Seismic Analysis of Multistoried Building with TMD (Tuned Mass Damper)." International Journal of Engineering Research and Applications (IJERA). Vol. 2, Issue 1,pp. 319-326
[10] Lucchini, A., R. Greco, G. C. Marano, and G. Monti. (2013) "Robust design of tuned mass damper systems for seismic protection of multistory buildings." Journal of Structural Engineering 140, no. 8 A4014009.I.S. 1893-1984, Indian Standard Code of Practice for Ductile Detailing of Reinforced Concrete Structures Subjected to Seismic Forces. Bureau of Indian Standard, New Delhi.

©IJRASET: All Rights are Reserved

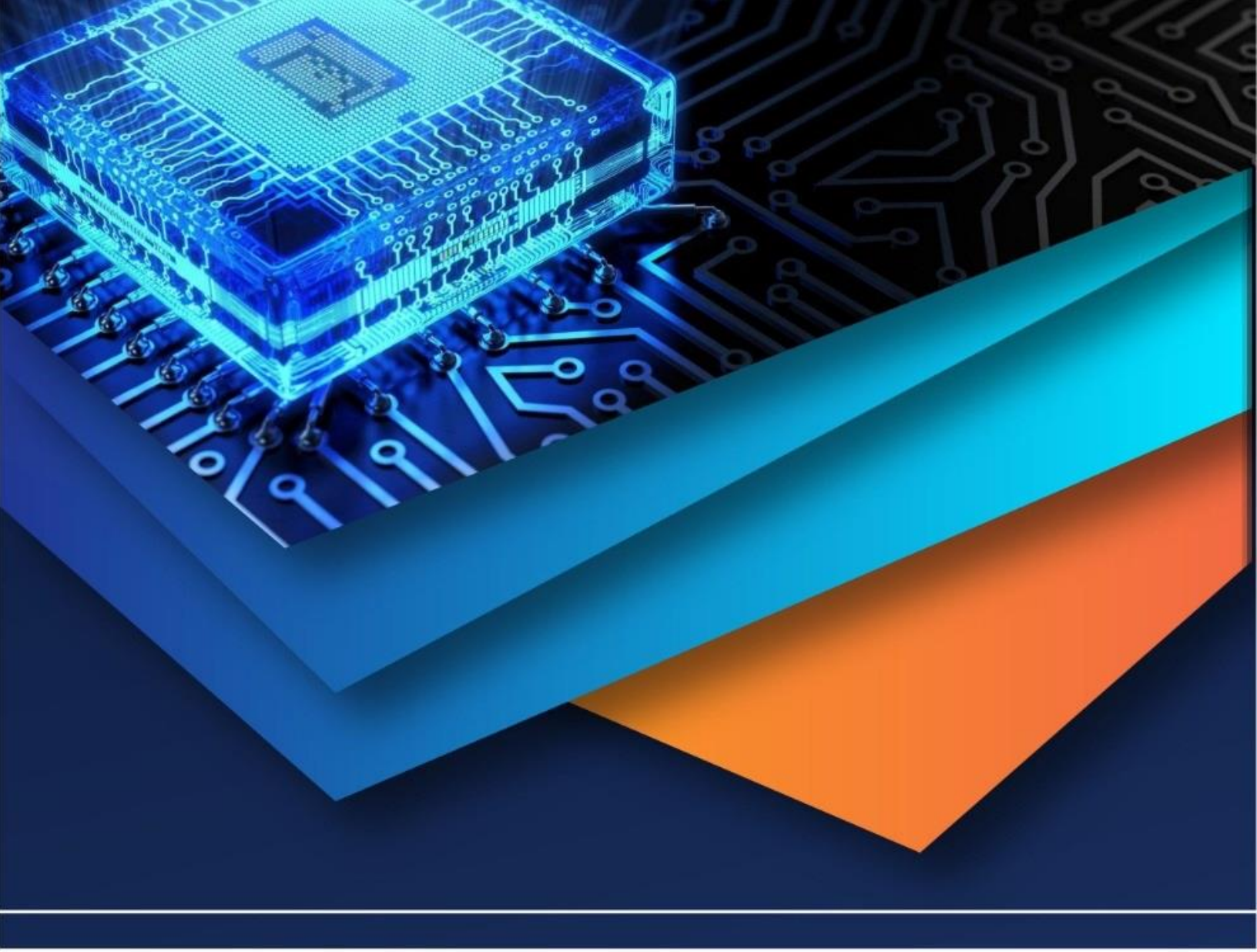

10.22214/IJRASET

45.98

IMPACT FACTOR: 7.129

IMPACT FACTOR: 7.429

INTERNATIONAL JOURNAL FOR RESEARCH

IN APPLIED SCIENCE & ENGINEERING TECHNOLOGY

Call : 08813907089 (24*7 Support on Whatsapp)