iJRASET
International Journal For Research in
Applied Science and Engineering Technology

# INTERNATIONAL JOURNAL FOR RESEARCH

IN APPLIED SCIENCE & ENGINEERING TECHNOLOGY

**Volume:** 6 **Issue:** X **Month of publication:** October 2018

**DOI:**

www.ijraset.com

Call: 08813907089 | E-mail ID: ijraset@gmail.com

International Journal for Research in Applied Science & Engineering Technology (IJRASET)
*ISSN: 2321-9653; IC Value: 45.98; SJ Impact Factor: 6.887*
*Volume 6 Issue X, Oct 2018- Available at www.ijraset.com*

# A Survey on Performance Comparison of IOT based Smart Air Purifier

Pathan Sameer Shabbir[1], Shaikh Sururahmed Nijam[2], Shaikh Tazin Mushtaq[3], Dr. Shinde J.N.[4]
[1, 2, 3, 4]*Al-Ameen College of Engineering and Medical Foundation, Koregaon Bhima, Pune, India*

***Abstract:** Health effects due to air pollution has increased a lot, because individual spend large amount of their time outdoor. Some indoor air contaminants arise from indoor sources, such as emissions from building insulation, carpets, or furniture. This paper presents a survey of IOT based smart Air Purifier which can be carried anywhere. In this we report the basic architecture of different air purifiers with the latest developments. In this we have reported performance of various design to get knowledge of current status of IOT based smart air purifier which is not helpful only indoor but also outdoor as it is portable.*

## I. INTRODUCTION

With the great advancement of technology and science comes an easy life but with some problems. One of the problems, and that to a huge one is air pollution. India is one of the most polluted countries in the world are prone to air borne diseases like asthma. So, our group took up the responsibility of making an air purifier which will be less power consuming so that when we are not present at that place we can on or off the purifier. On the other hand there were many air purifiers which can be used for residential purpose, but the amount of air pollution outdoor is more than compared to the indoor. Hence, we decided to design an air purifier that can be carried anywhere easily as it is a small device that is it is completely portable. By using IOT with air purifier the power consumption becomes less hence it is very important element. By using IOT we can operate the air purifier from anywhere. Air purifier is designed with different circuit topologies ; each method proposes to accommodate advancement meeting the current requirement. In this paper we present a comprehensive survey of air purifiers and their performance. In section I, introduction gives general information about air purifier. The section II, describe different types of air purifier. In section III, we present concluding remarks about the performance comparison of air purifiers.

## II. DIFFERENT TYPES OF AIR PURIFIER

### *A. An IOT based Smart Power Management System for Technical University*

Nowadays use of IOT has been increasing day by day; the importance and usage is on tremendous demand. There is lots of research going into IOT based power management systems. The increase in power requirement has made the researchers and industrialist to design low power systems. The wastage of energy is a very serious issue; this paper proposes a method to reduce the wastage of power in technical universities by the power distribution agencies across the world. This system consists of thermal sensing and IOT enabled microcontrollers for the working. Power management is an important aspect towards the development of the nation. Most of the countries are trying to develop and execute various projects to conserve energy. Power should be utilized efficiently, and for that we need systems which consume power efficiently.

Block Diagram

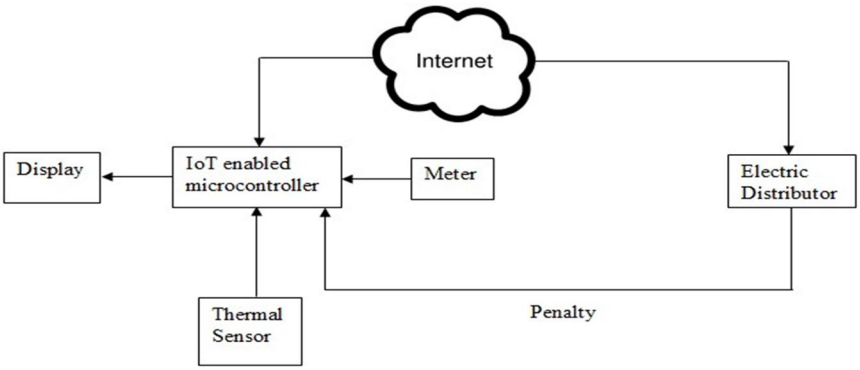


Figure 1: a high level view of IOT

©IJRASET: All Rights are Reserved

1) *Performance:* The notion of a universally interlocked variety of devices, objects and things in universal began with the RFID technology, and this model has significantly been stretched to the present idea that visualizes an excess of mixed things communicating with the physical surroundings. Some electrical appliances shown in above table are widely used in day to day life. The power can be saved by maximizing the use of CFL bulbs, other low power driven devices. The computer and other similar devices will consume only less power in standby mode hence such systems are always neglected when a IOT based power management system is installed. But in a technical university there is a huge number of such electronic devices.

### *B. Residential Air Cleaners*

Indoor air pollution is among the top five environmental pollution which results in health problem. The best way to reduce this risk is to control or eliminate the sources of pollution, and to have a home with clean outdoor air. This method may, however, be limited by weather conditions or undesirable levels of contaminants in outdoor air such as dust. But these measures are not too appropriate, an air cleaning device may be useful. While air cleaning devices may help to control the levels of airborne allergies, particles, or, in some cases, gaseous pollutants in a home, they may not decrease adverse health effects from indoor air pollutants. The only disadvantage of this system is that it is not portable.

Block Diagram

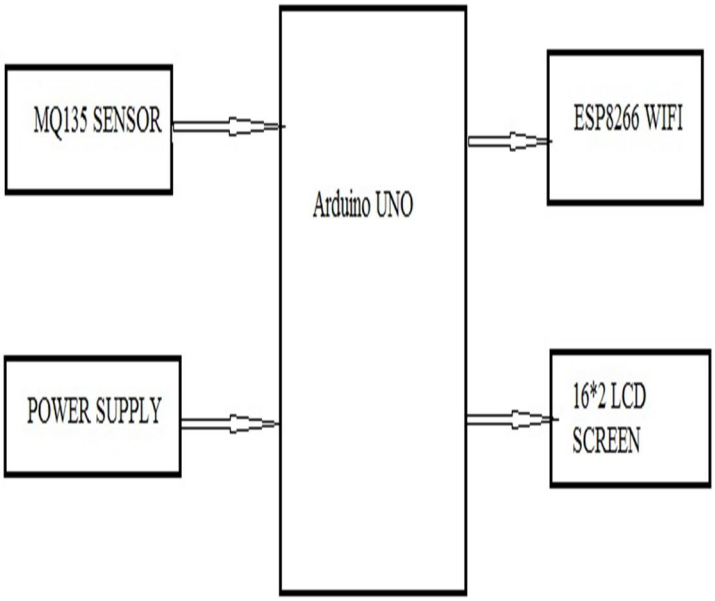


Figure 2: Residential Air Cleaners

1) *Performance:* Electronic air cleaners such as electrostatic precipitatates use a process called electrostatic attraction to take charge over the charged particles. They draw air through an ionization section where particles obtain an electrical charge. The charged particles then gets collect on a series of flat plates called a collector that is oppositely charged. Ion generators, or ionizers, emit charged ions in the air, similar to the electronic air cleaners but without using a collector. These ions attach to airborne particles, giving them a charge so that they attach to nearby surfaces such as walls or furniture, or attach to one another and settle faster.

### *C. Design and Implementation of LPWA-Based Air Quality Monitoring System*

Great attention has been given to air quality monitoring with a rapid advancement in industry and transportation applications in the modern society. But, the existing air quality monitoring systems does not provide satisfactory spatial and temporal resolutions of the air quality information with fewer costs in real time. In this paper, we propose a new method to implement the air quality monitoring system based on the new technology Internet-of-Things (IOT) techniques. In our proposed system, portable sensors collect the air quality information every time, which is transmitted through a low power wide area network. Each and every information of air quality is processed and analyzed in the IOT cloud.

©IJRASET: All Rights are Reserved

Block Diagram

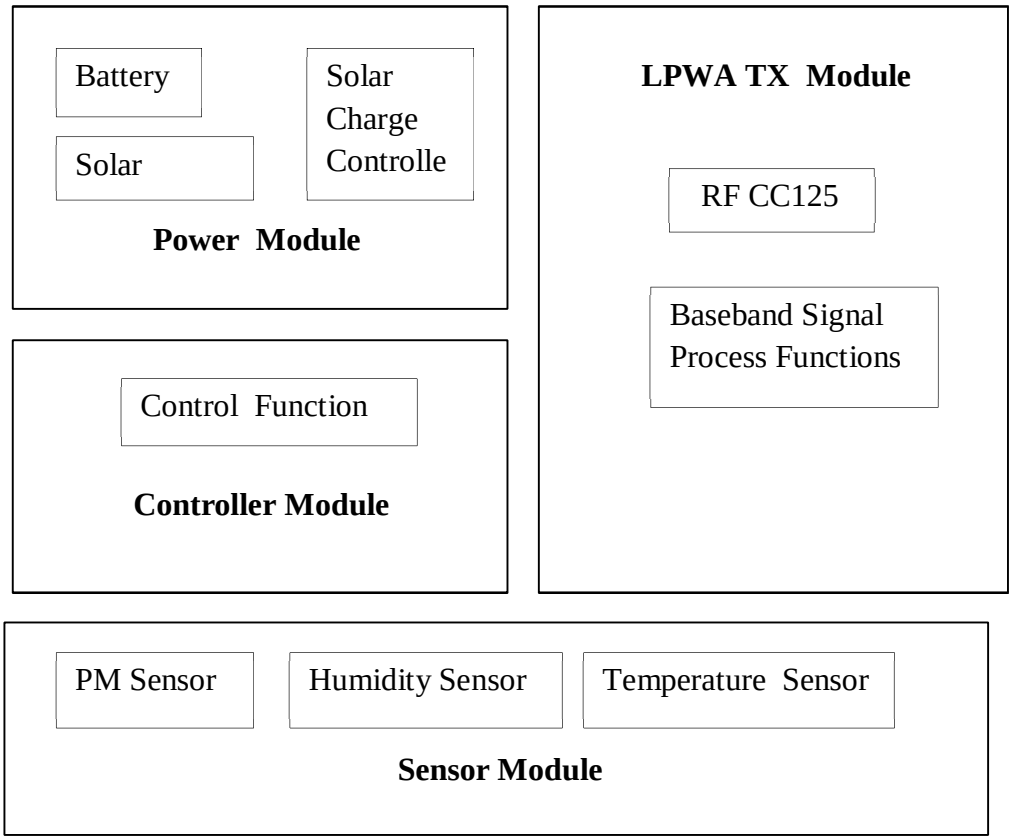


Figure 3: Design and Implementation of LPWA-Based Air Quality Monitoring System

1) *Performance:* Each monitoring node consists of four components, i.e. the sensor module, controller module, LPWA module and power module. The sensor is used to sense the air quality information and transfer them to the controller module through USART interface. Then the controller samples the air quality data and transmits them via the RF module, whose base band signal processing procedures are implemented according to IEEE 802.15.4K specification. Also, it is responsible for performing all the flow control in the node. The monitoring node is powered by a solar battery system that supports long term use.

*D. A Portable Air Cleaner Should Be At The Forefront Of The Public Health Response To Landscape Fire Smoke*

Wildfire smoke is a complex mixture of air pollutants, including small particles that can cause irritation and inflammation when inhaled. Even though wildfire smoke is generated outdoors, it can come indoors through windows, doors, vents, and other openings in the building envelope. This system contained the disadvantage of power wastage. Portable air cleaners are mobile units that plug into regular wall sockets and can be moved between rooms. Their working is such that they gather air in from the surrounding area, reducing its pollutant concentrations, and then releasing into the surrounding area.

Block Diagram

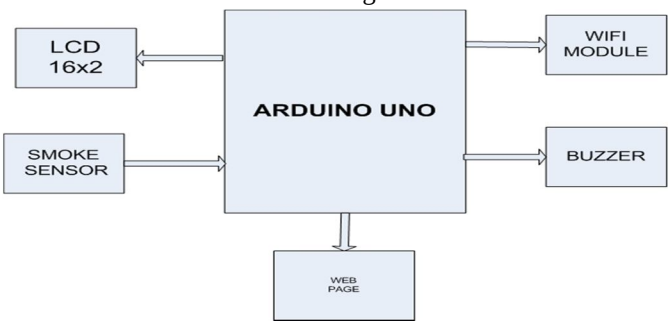


Figure 4: Portable air cleaners should be at the forefront of the public health response to landscape fire smoke

©IJRASET: All Rights are Reserved

1) *Performance:* Most people spend up to 90% of their time indoors, where portable air cleaners can be used to improve air quality and reduce the health impacts of wildfire smoke. Most portable air cleaners use one of two mechanisms to remove particles from indoor air: HEPA filtration or electrostatic precipitation. HEPA units use mechanical suction to pull air across a highly efficient filter designed to trap particles as small as 0.3 micrometers in diameter.

*E. Evaluating Ozone Spatial Distribution In Portugal Using Passive Samplers*

Troposphere ozone is a main reason of pollution in Portugal and in Europe, specially during summer and spring time. In Portugal, many studies and analysis of air quality data series highlighted high ozone ($O_3$) levels inland. A study was made to know the rural background stations representative area for $O_3$. Many campaigns were made in the summer of 2005 within five Portuguese air quality management zones where critical levels are usually observed. $O_3$ passive samplers (148 diffusive tubes, one-week exposure) as well as a mobile monitoring station were used. In relation to spatial $O_3$ patterns, the air quality stations appear to be representative of the majority of their zones which were studied. Thus, it seems that similar geographical, topographical and meteorological conditions are a more significant factor to define the station's area of representative, rather than the proximity between locations.

Block Diagram

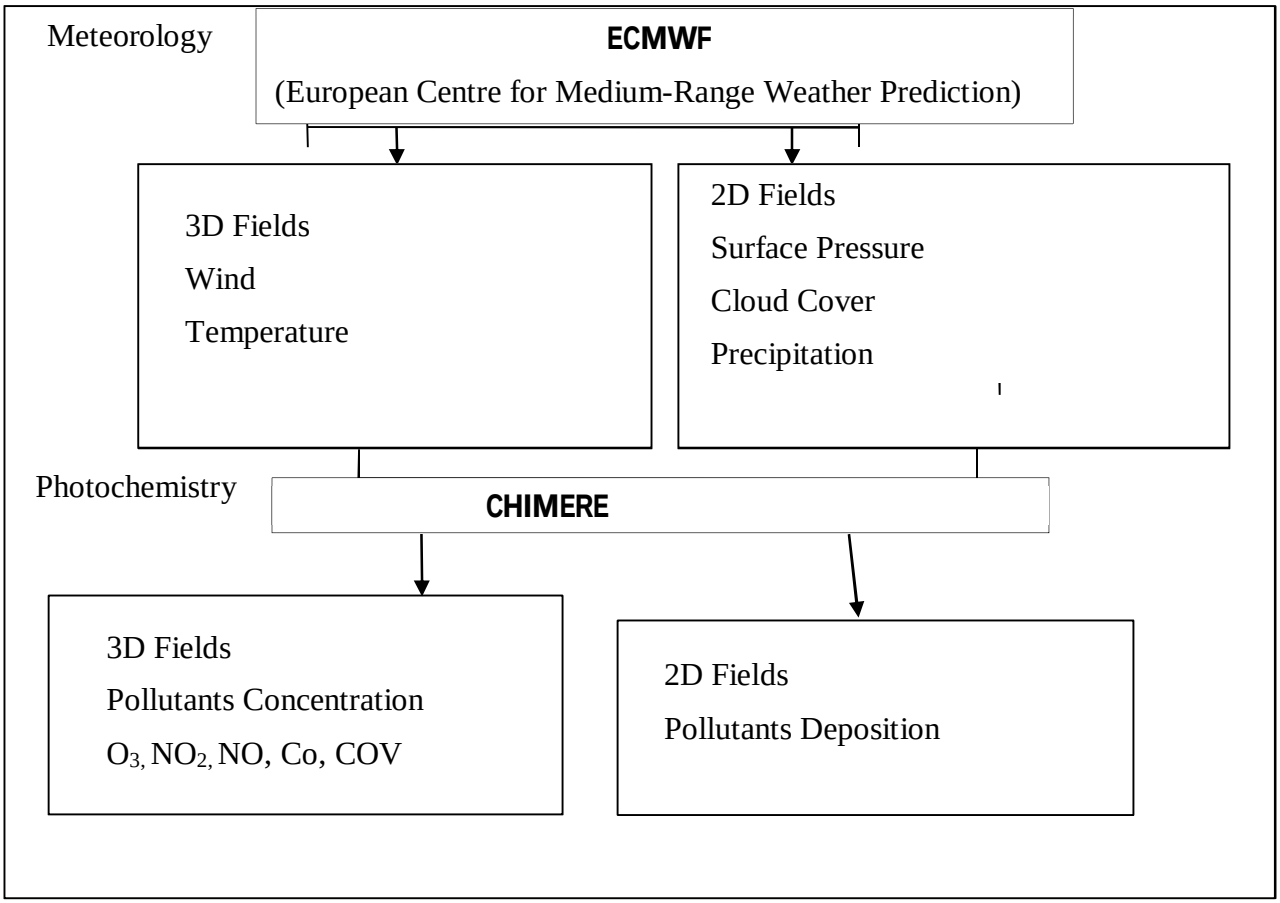


Fig.5. Structure of the modeling system.

1) *Performance:* Active monitoring has proved to be an appropriate and efficient approach to know about how representative are the Portuguese rural background stations measurements. The arrival of the temporal representative was based on the hourly $O_3$ correlation matrix collected from a mobile monitoring unit and from rural background monitoring network data sets. Despite ozone concentrations gathered during these campaigns reflect a particular situation taking place in a specific period, air quality monitoring stations appear to be spatially representative of the great majority of each zone where they are located.

©IJRASET: All Rights are Reserved

## III. CONCLUSION

In this paper, we present the comparative study of performance of reported IOT based smart air purifier. Here we are implementing air purifier which is IOT based and can be carried anywhere that is it completely portable. This can operate indoor as well as outdoor, which plays an important role to avoid the air pollution.

## REFERENCES

[1] Khalid A. Fakeeh, PhD King Abdullaziz University Jeddah, Saudi Arabia "An IOT based Smart Power Management System for Technical University" International Journal of Computer Applications (0975 – 8887) Volume 149 - No.1, September 2016

[2] EPA technical document Residential Air Cleaners: A Summary of Available Information (Second Edition), EPA 402-F-08-005, May 2008.

[3] J. Monjardino, S. Mesquita, H. Tente, F. Ferreira, P. Gomes & N. Franco "Evaluating ozone spatial distribution in Portugal using passive samplers" WIT Transactions on Ecology and the Environment · April 2007

[4] KAN ZHENG1, (Senior Member, IEEE), SHAOHANG ZHAO1, ZHE YANG1, XIONG XIONG1, AND WEI XIANG2, (Senior Member, IEEE) "Design and Implementation of LPWA-Based Air Quality Monitoring System" July 7, 2016.

[5] Barn PK, Elliott CT, Allen RW, Kosatsky T, Ride out K, Henderson SB (2016). Portable air cleaners should be at the forefront of the public health response to landscape fire smoke. Environmental Health. 15(1):116

©IJRASET: All Rights are Reserved

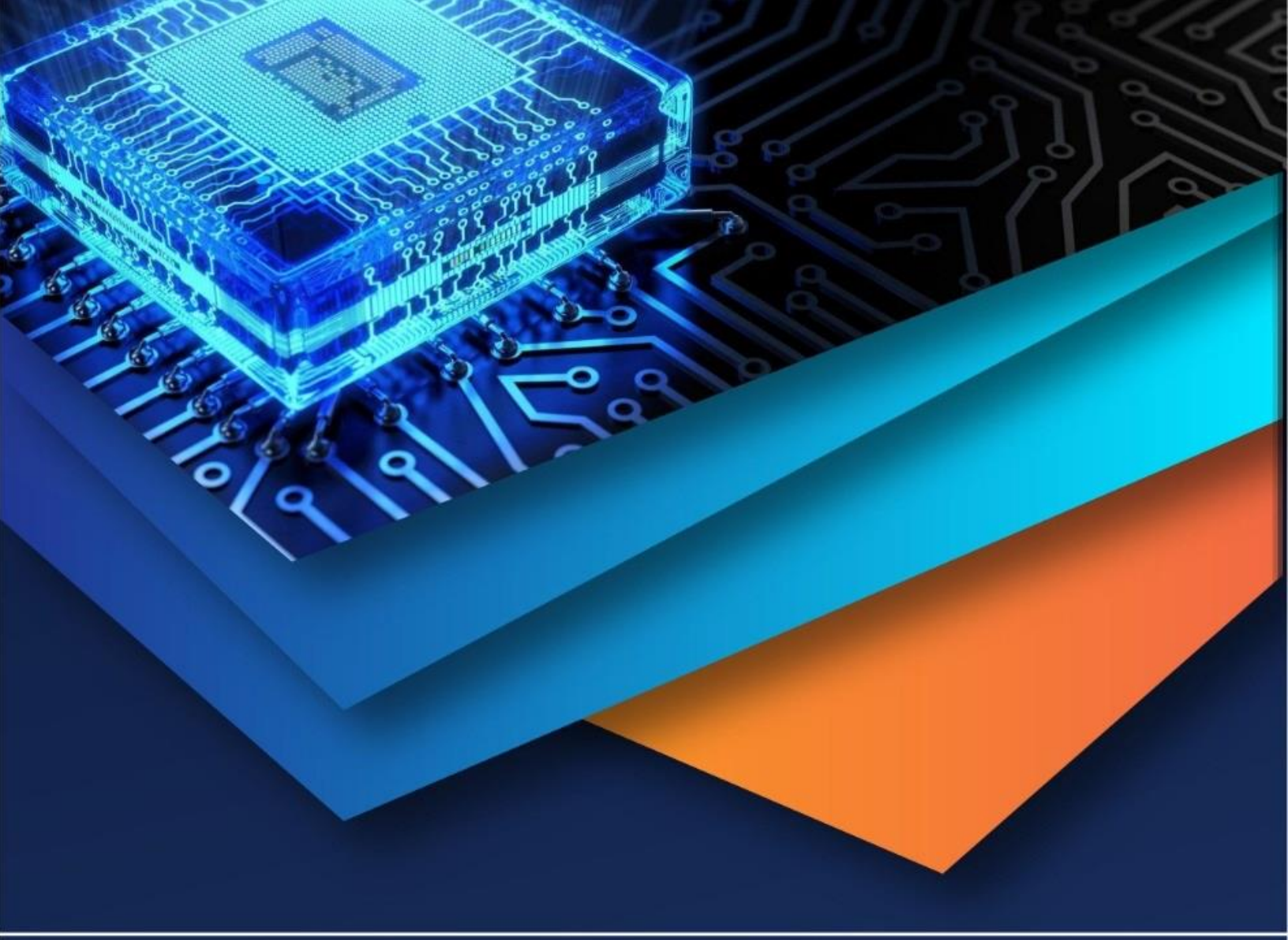

10.22214/IJRASET

45.98

IMPACT FACTOR: 7.129

IMPACT FACTOR: 7.429

# INTERNATIONAL JOURNAL FOR RESEARCH

IN APPLIED SCIENCE & ENGINEERING TECHNOLOGY

Call : 08813907089 (24*7 Support on Whatsapp)