iJRASET
International Journal For Research in
Applied Science and Engineering Technology

INTERNATIONAL JOURNAL FOR RESEARCH

IN APPLIED SCIENCE & ENGINEERING TECHNOLOGY

Volume: 3 **Issue:** V **Month of publication:** May 2015

DOI:

www.ijraset.com

Call: 08813907089 | E-mail ID: ijraset@gmail.com

International Journal for Research in Applied Science & Engineering Technology (IJRASET)

"netBuddy"
WLAN monitoring on smart phones

Sharukh Mullani[1], Amit Taware[2], Kiran Bhatte[3], Siddhesh Joshi[4], Prof.M.K.Kodmelwar[5]
[1 2 3 4] *Savitribai Phule Pune University, Bhivarabai Sawant College of Engineering and Research, Narhe, Pune, Maharashtra, India*
[5] *Savitribai Phule Pune University, Bhivarabai Sawant College of Engineering and Research, Narhe, Pune, Maharashtra, India*

Abstract— Today, the world is rapidly changing the statement "We are in the world" to "World is in our hands". The main aim of our project is to control and monitor the LAN network from our wireless handheld device i.e. cell phone from anywhere irrespective of distance. In a concern, computers are grouped together to form a network. To manage and control the activities of the network while in office is an easy task. But, while you are outstation / away from office, how do you go about with monitoring and controlling of network? Instead of depending on third party information, you can always have your cell phone serve the purpose. Just load the project in your cell phone, login anytime to the application and see who is busy with what in the office. Say, you have a LAN setup at your office. Sitting at home you want to learn the LAN status. You can do so by storing this project in your cell phone and executing the same.
Keywords— Wireless LAN, Advanced Encryption Standard (AES), JDK, IMEI, Plug-ins, Pre-Shared Key (PSK)

I. INTRODUCTION

In this project we are using mobile phone to control LAN. Generally for doing so we required application program to be install on admin computer. Extending the Wireless LAN (WLAN) to be a core technology will mean providing granular WLAN authorization and access control. We are going to learn about Wireless LAN access control, as well as managing users on guest wireless networks and controlling Wi-Fi embedded devices on the WLAN. Main objective of our project is to help Admin to minimize his workload and do it efficiently. Solution to existing system can be control and monitor the LAN network from our wireless device i.e. cell phone from anywhere irrespective of distance.

II. LITERATURE SURVEY

A literature survey (review) is at text of a scholarly paper, which includes the current knowledge including substantive findings, as well as theoretical and methodological contributions to a particular topic. Literature reviews use secondary sources, and do not report new or original experimental work.

A. PC List and File manager module

Idea of generating PC List in a network is taken from PocketDroid by effective use of Windows or Linux based commands. Also browsing files in various directories is discovered. Designing of PocketDroid is done in three phases- First, Running of commands via android application. Then providing mechanism for graphically interacting with files and folders and Lastly, Remote visualization [1].

B. Connection module

Work done for observing challenges of wireless monitoring. Those challenges are prerequisites for connection module. They presented problems such as Limited capacity of network controlling , Synchronization problem of data transmission and Network traffic limitation.[2][3]

©IJRASET 2015: All Rights are Reserved

III. LIMITATIONS OF PREVIOUS SYSTEM

Monitoring and controlling client's machines in same network is possible through computers i.e. Using Wired communication medium. Server computer having all access rights for handling computers in networks. But Administrator needs to available on the site. He needs to visit and check client machine if any problem has occurred during work. Even he needs to handle simple tasks manually such as Shut Down computers, view clients etc.

IV. PROBLEM STATEMENT

Problem definition is NetBuddy WLAN monitoring on smart phones. With justification we propose that our project will help Admin to minimize his workload and execution of task effectively. We are planning develop a system that will provide maximum details about the network to the Admin on his mobile phone.

V. PROPOSED SOLUTION

Proposed solution to existing system can be control and monitor the LAN network from our wireless device i.e. cell phone from anywhere irrespective of distance. We are planning develop a system that will provide maximum details about the network to the Admin on his mobile phone. To propose a solution for those drawbacks we need to analyze previous system. According to study the main requirements are genereting list of computer available on network and viewing tasks and files of individual machine. Beside this, there are many sub activities supported to those main activities such as transfering message to client machine, taking screen-shot of client screen, shut down machine remotely and etc.

A. System Architecture

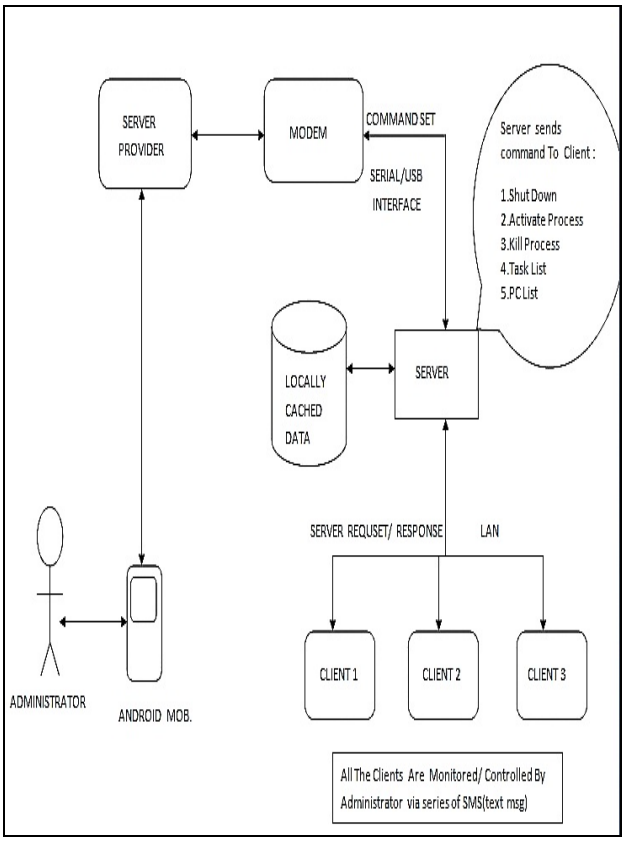

Fig.(1) System architecture

©IJRASET 2015: All Rights are Reserved

System design is the solution for the creation of new systems which provides procedural details for implementing the system. It goes through logical and physical design phases which emphasize on the development process.

Network is formed by connecting numbers of client machines to the single server. The interaction between the clients and the wireless media happens through this server. Here Network administrator must have Android based mobile on which our system is installed.

Once this connection gets authenticated by application itself continuous service will be provided. Major features of our system are viewing active computers, their executing processes. To control those activities Admin can activate or kill any remote processes. To communicate with clients the message from android phone to any client machine can be send. Admin can also broadcast message to all clients in the network.

B. Algorithm

AES is most widely used cipher selected by US National Institute of Standards and Technology (NIST). It requires block cipher with 128 bit block size. It supports 128,192 and 256 bit key lengths. It is most secure algorithm and efficient in hardware and software. In this algorithm cipher is iterated with some number of rounds. Each round consists of layers. For encryption, each round has four steps- Substitute Byte, Shift Rows, Mix Columns and Add Round Key. The last step is carried out by XORing the output of previous three steps with four words from key schedule. For decryption, each round has four steps- Inverse shift rows, Inverse substitute bytes, Add round key, Inverse Mix columns. In this also third step is carried out in the same way as encryption.

AES key expansion algorithm is used to derive round key for each round. Due to the key lengths, brute force attack is not possible. Our project uses AES algorithm for encrypting and decrypting commands between Android phone and Server computer. Sequence of events is performed as

1) *Sender:* When request is fired through Android phone to Server machine for particular command executing, it does not send directly. Rather it is encrypted in secure manner using AES algorithm.
2) *Receiver:* Encrypted request does not directly executed by Server computer. First it is decrypted to its original form. Then request is processed and output of command is sent back to the sender.

VI. EXPERIMENTATION

A. Implementation of GUI and Connection module

GUI is designed using android IDE. Android project contains various logical directories and interfaces are stored in “Layout” directory. Each interface is stored with .xml extension. Various interfaces are designed named- welcomescreen.xml, config.xml, pclist.xml.

Implementation of connection module is completed in two phases. Those are

1) Server side Java code
2) Coding for Android phone

B. Implementation of PC monitor module

After successful implementation of first module, PC monitor module is taken for development. All Java files are kept in “src” directory of the Android project. This module is also divided into two sub parts. Those are

1) Server code using java programming
2) Coding for android phone

This module is working partially yet. Testing of multiple computers is not finalized. After completion of this module rest of module will be implemented.

VII.RESULT

A. Configuration window

©IJRASET 2015: All Rights are Reserved

Volume 3 Issue V, May 2015
ISSN: 2321-9653
International Journal for Research in Applied Science & Engineering Technology (IJRASET)

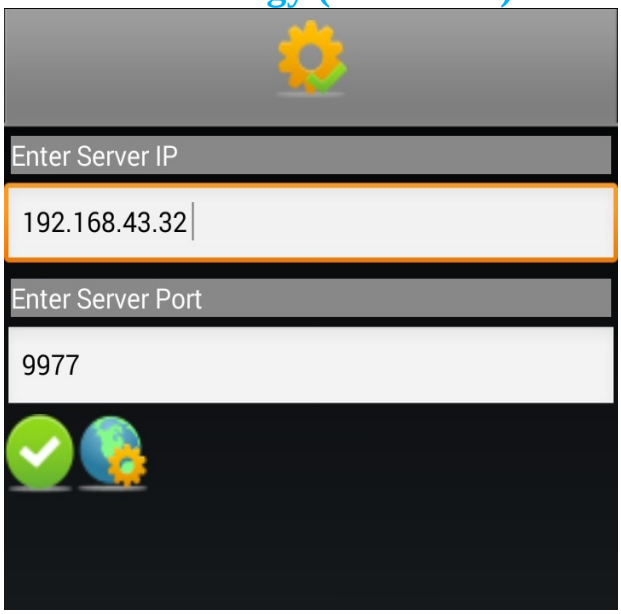

B. Connection establishment message

C. PC List window

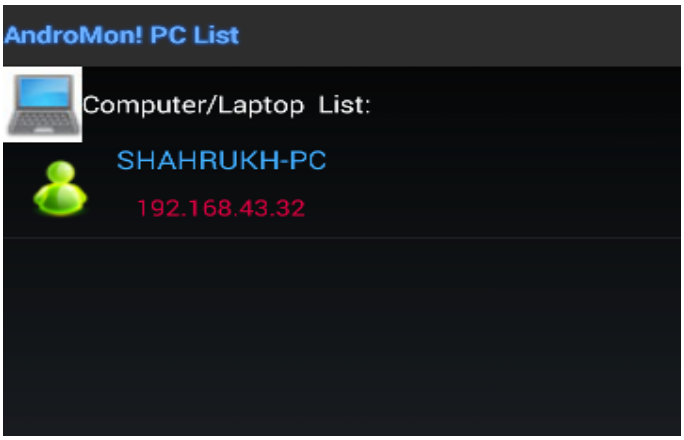

©IJRASET 2015: All Rights are Reserved

D. Server execution

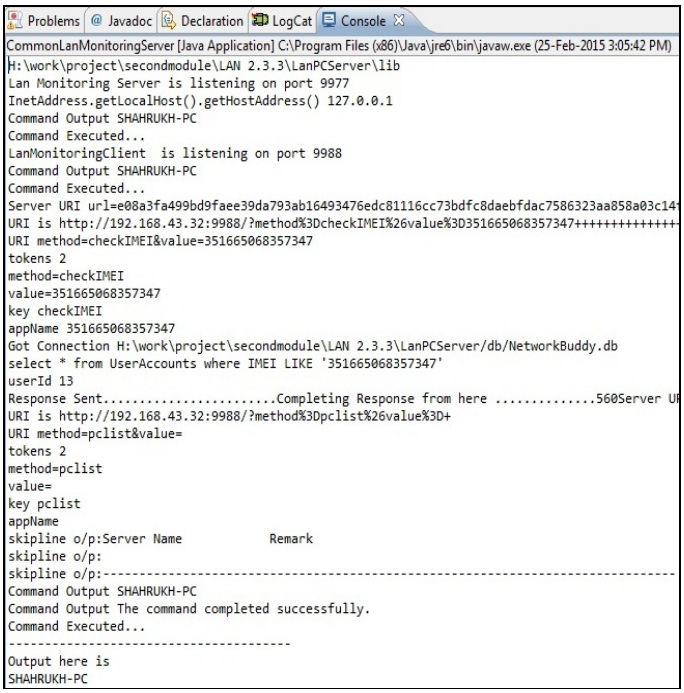

VIII. CONCLUSION AND FUTURE WORK

We are attempting to design this project with the sole objective of help admin to minimize his workload and do it efficiently. If all goes well, it will be proved as a good tool for admin. It is developed using Android platform and Java language which are open-source so new features will be included easily in future.

IX. ACKNOWLEDGMENT

We wish to express our sincere thanks and deep gratitude towards Dr. D. V. Jadhav[Principal BSCOER], Dr. S.M. Chaware[HOD Computer Dept.], our guide Prof. M .K. Kodmelwar [Asst. Professor/ Project Coordinator] and Prof. N. G. Kharate [Asst. Professor] for his guidance, valuable suggestions and constant encouragement in all phases. We are highly indebted to his help in solving my difficulties which came across whole Paper work. Finally we extend my sincere thanks to respected Project Coordinator and all the staff members for their kind support and encouragement for this paper.

REFERENCES

[1] Deepa Nagdev, Chaitali Navsare, Jai Shree presented PocketDroid- A PC Remote Control in Year of 2012.

[2] What is Android http://developer. android.com /guide /basics /what-is-android.html Retrieved March 1st, 2011

[3] Jihwang Yeo, Moustafa Youssef, Ashok Agrawala. Presented paper named as A Framework for Wireless LAN Monitoring and Its Applications.

[4] Angel Gonzalez Villan, Student Member, IEEE and Josep Jorba Esteve, Member, IEEE presented Remote Control of Mobile Devices in Android Platform.

[5] M. Raya, J-P. Hubaux and I. Aad. DOMINO A System to Detect Greedy Behavior in IEEE 802.11 Hotspots. In Proceedings of the 2nd international conference on Mobile systems, applications, and services, Boston, MA, June 2010.

[6] J. Bellardo and S. Savage. 802.11 Denial-of-Service Attacks: Real Vulnerabilities and Practical Solutions. In Proceedings of the USENIX Security Symposium, Washington D.C., August 2009.

[7] D. Kotz and K. Essien. Analysis of a Campus-wide Wireless Network In Proc. the Eighth Annual International Conference on Mobile Computing and Networking (MOBICOM 2008),Atlanta, GA, September 2010.

[8] RemoteDroid. http://remotedroid.net/ Retrieved 23rd Aug, 2011.

[9] Qadeer, M.A.; Agrawal, R.; Singhal, A.; and Umar, S, "Bluetooth Enabled Mobile Phone Remote Control for PC",International conferences on Advanced Computer Control, 2008.IEEE DOI 10.1109/ ICACC .2009.91

©IJRASET 2015: All Rights are Reserved

[10] Michael Spreitzenbarth, "Tools and Processes for orensic Anal-yses of smartphones and Mobile Malware", 6. GI FG SIDAR Graduierten-Workshop ueber Reaktive Sicherheit (SPRING),March 22th, 2011.

[11] A. Balachandran, G.M. Voelker, P. Bahl and V. Rangan. Characterizing User Behavior and Network Performance in a Public Wireless LAN In Proc. ACM SIGMETRICS 2002, Marina Del Rey, CA, June 2011

[12] Android Developers, Android SDK. http://developer. android. com/sdk/ Retrieved March 1st,2009.

[13] Android Developers, USB Host and Accesory", http://developer.android.com/guide/topics/usb/index.html, Retrieved June 1st, 2011.

©IJRASET 2015: All Rights are Reserved

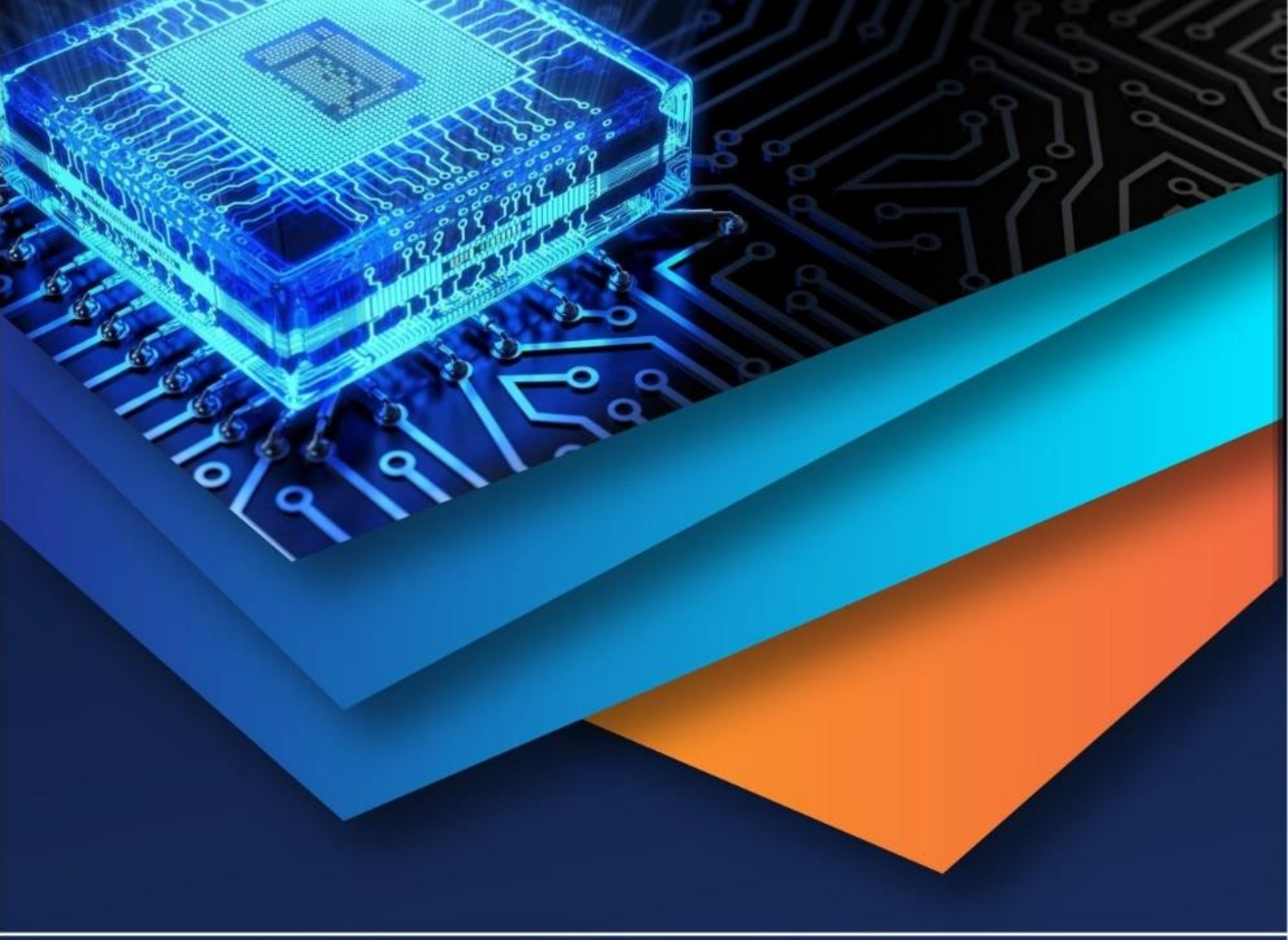

10.22214/IJRASET

45.98

IMPACT FACTOR: 7.129

IMPACT FACTOR: 7.429

INTERNATIONAL JOURNAL FOR RESEARCH

IN APPLIED SCIENCE & ENGINEERING TECHNOLOGY

Call : 08813907089 (24*7 Support on Whatsapp)