iJRASET
International Journal For Research in Applied Science and Engineering Technology

INTERNATIONAL JOURNAL FOR RESEARCH

IN APPLIED SCIENCE & ENGINEERING TECHNOLOGY

Volume: 7 **Issue:** IV **Month of publication:** April 2019

DOI: https://doi.org/10.22214/ijraset.2019.4177

www.ijraset.com

Call: 08813907089 | E-mail ID: ijraset@gmail.com

International Journal for Research in Applied Science & Engineering Technology (IJRASET)
ISSN: 2321-9653; IC Value: 45.98; SJ Impact Factor: 6.887
Volume 7 Issue IV, Apr 2019- Available at www.ijraset.com

ENTRON-A Hand Gesture Operated Unmanned Battlefield Bot

Shivam Mishra[1], Himanshu Prajapati[2], Saurabh Shuklas[3], Prateek Mishra[4], Priyanshu Chauhan[5], Prof. Sulekha Saxena[6]
[1, 2, 3, 4, 5]Student, [6]Asst Prof, (Electrical & Electronics Dept.), IMS Engineering College, Ghaziabad, India 201009

***Abstract:** ENtron is a smart robotic car that almost tries to replace a spy agent from battlefield. It is a multifunctional car that can be operated by hand gesture or remote .Features like anti-collision, shoot at sight, speed control, suspension; location tracking makes the operation of car highly effective. It has various sensors which can transmit the useful information like temperature, humidity, soil and moisture condition to the service station It has sliding sharp cutters which makes clear path when required.*
It has various application in different areas like security, military, space exploration and working in hazardous environment etc. In this project aurdino ATMEGA 2560 and UNO 328 is used. The code is written in arduino microcontroller with the help of software arduino.
ENtron is specially designed for border security purpose. This unmanned vehicle can be used for both civilian and military applications to perform a variety of activities which are dangerous for humans to perform. Till date no such vehicle is designed which can replace humans on war front or for spying on our borders.

I. INTRODUCTION

ENTRON is a Gesture controlled vehicle which is used for defense purpose. The objective of this project is to save the life of soldiers posted on our border. After this new robotic revolution in Indian army, human causalities can be reduced to a great extent. Also this vehicle is equipped with various advance features like Shoot at sight, Night vision camera, Sharp cutters, Robotic hands, specially designed wheel mechanism, Anti-collision capability and GPS and GSM module for determining the location of the vehicle.

The objective of ENTRON is as follows:

A. To ensure proper safety of our borders.
B. To ensure the safety of our soldiers
C. It can be accessed from remote location.

ENTRON is a vehicle that operates without an onboard human presence (UGV). It is an unmanned ground vehicle which can be used for many applications where it may be inconvenient, dangerous, or impossible to have a human operator present. This vehicle consists of a set of sensors to observe the environment and pass the information to a human operator at a different location who will control the vehicle through tele-operation [1].

II. LITERATURE REVIEW

There were about 1.3 million paramilitary personnel in the Indian armed forces, making it one of the largest military forces.. The domestic suppliers like IOF (Indian ordnance factories), Hindustan aeronautics, Bharat electronics etc. provide the best paramilitary equipments making the forces stronger. Various sites nearby border security range have been visited to analyze the problem faced by Indian soldiers who are posted in border security region and various featured unmanned vehicle prepared by various manufacturer. This unmanned vehicle is fulfilling the entire requirement which is necessary for every security region.

III. WORKING

A. Software

Finalize model of this project is design with the help of aurdino ATMEGA 2560 and UNO 328. The code is written in arduino microcontroller with the help of software arduino [1]

©IJRASET: All Rights are Reserved

B. Real Hardware Implementation

1) In the forest or desert area the places are to uneven thus cause every vehicle to face certain problem in the war as they got stuck to some place hence we designed a 8 wheel system through which car can easily move in any type of surface without any problem, And also place the gun where it is possible to shoot at sight in 360 range and coverage whole area after tackle all these type of problems we makes a compact hardware of vehicle which are possible to arrange all the function and application easily .Cast iron is used depending on load requirement as well as cost consideration to built chassis. Various machines was used regarding making the structure like Lathe machine, Grinder, Drilling machine, Welding machine etc[3]

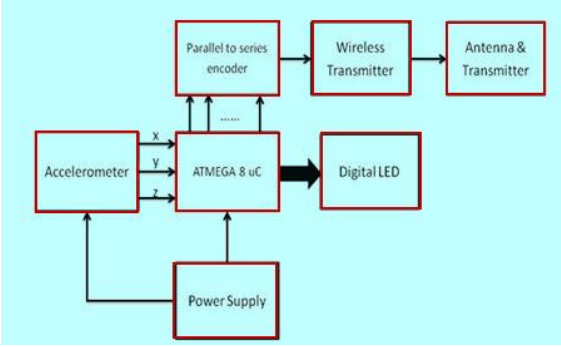

2) Use high torque Dc motor (T-32kgcm, I-7.5A) which are capable to wearing load connected with motor driver L293D. [2]

3) Rechargeable battery (12V) is used for the supply to the motor. And Solar panel(5w) for recharging battery with two dc motor(T- 170 g.cm) as such when there is sunlight the motor open the solar panel either wise they will be in close or hidden position[4][5].

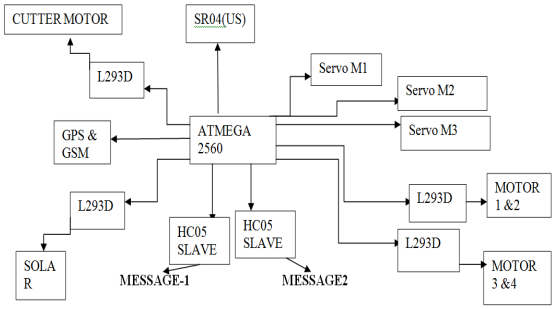

4) Using DC motor for functioning of blades cutter as if any grass or certain object come in front of camera (V380 WIFI SMART CAMERA) that will stop the view hence the cutter will cut the grasses & gives the camera a perfect vision. [9]

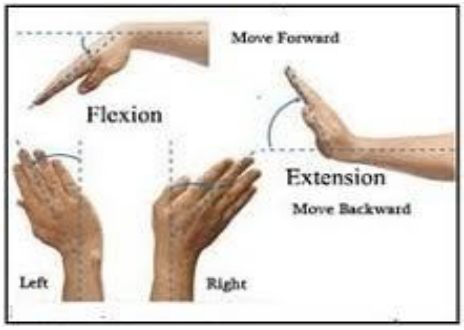

5) Use Servomotors(13kg/cm,4.8-7.2v) for the movement of gun(100m shooting range) & camera in 360 degree as such shooting to be possible in any direction[5]..

6) Using GPS (5V DC, baud rate 4800 - 115200, 1575.42 MHz) and GSM (900/ 1900 MHz, 1.5mA, 9600bps) [9]. GPS is a network of satellite that sends its precise and accurate location in space to the GPS receiver.[10]

©IJRASET: All Rights are Reserved

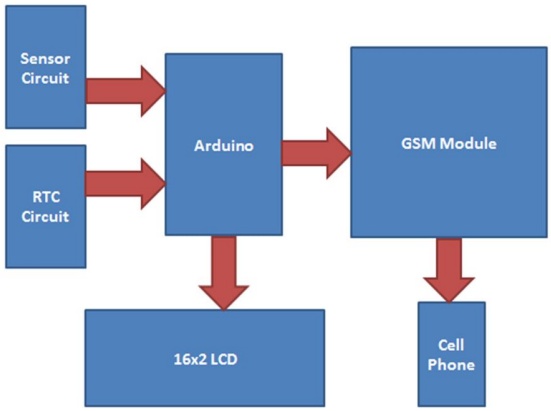

IV. RESULT

INDIAN ARMY is the third largest army across the world & has a huge no. of enemies. As per the reports a large number of soldiers lost their lives every year on our borders. This is a great loss to our nation as well as to their families also. Thus there is a need to build an unmanned vehicle with shooting & spying capabilities so that it can work like a soldier. It can be converted to an ultimate weapon that can easily survive on war for a longer period of time. ENTRON is a revolutionary idea in the field of military research. It is an unmanned vehicle equipped with combat features to save the life of soldiers on our border security range as well as it can be used in any place where high security is needed.

REFERENCES

[1] Nieschulz, R., Geiger, M., Bengler, K., Lang, M. (2001). An Automatic, adaptive Help System to Support Gestural Operation of an Automotive MMI. Poster Proceedings HCII 2001 (New Orleans, Louisiana, USA), (this conference)

[2] CAD Man Modell RAMSIS. Illustration provided by Lehrstuhl für Ergonomie (http://www.lfe.mw.tum.de/), Technische Universität München, Boltzmannstraße 15, D-85748 Garchin

[3] Carafano, J., & Gudgel, A. (2007). The Pentagon's robots: Arming the future [Electronic version]. Backgrounder 2093, 1–6.

[4] Singer, P. (2009a). Military robots and the laws of war [Electronic version]. The New Atlantis: A Journal of Technology and Society, 23, 25–45.

[5] Askari Mohammad Bagher, Mirzaei Mahmoud Abadi Vahid, Mirhabibi Mohsen. "Types of Solar Cells and Application". American Journal of Optics and Photonics.Vol. 3, No. 5, 2015, pp. 94-113. doi: 10.11648/j.ajop.20150305

[6] "VIDEO MONITORING AND MOTION DETECTION SYSTEM BASED ON ARM-LINUX PLATFORM AND HTTP PROTOCOL WITH SMS CAPABILITY" *Nava Jeevan Raju, O. and Praveen, P.(2014)

[7] R. Radha, K. Kathiravan, V. Vineeth, J. Sanjay and S. Venkatesh, "Prevention of monkey trespassing in agricultural field using application agriculturalspecific flooding approach in wireless sensor network," 2015 IEEE Technological Innovation in ICT for Agriculture and Rural Development (TIAR), Chennai,2015, pp. 106-11

[8] G. Gokilakrishnan, S. Divya, R. Rajesh, V. Selvakumar, "Operating torque in ball valves- A review," International Journal For Technological Research In Engineering, vol. 2, no. 4, pp. 311-315, 2014

[9] Scott Pace, Gerald P. Frost, Irving Lachow, Dave Frelinger, Donna Fossum, Don Wassem, Monica M. Pinto. The Global Positioning System, Assessing National P olicies, A ppendix B: G PS History, Chronology, and Budgets, monograph/report products, Rand corporation. http://www.rand.org/pubs/monograph_reports/MR614/MR614.appb.pdf]

[10] International Journal for Research in Applied Science & Engineering Technology (IJRASET). Volume 4 Issue VII, July 2016. IC Value: 13.98 ISSN: 2321-9653.chop aw machine

[11] Nieschulz, R., Geiger, M., Bengler, K., Lang, M. (2001). An Automatic, adaptive Help System to Support Gestural Operation of an Automotive MMI. Poster Proceedings HCII 2001 (New Orleans, Louisiana, USA), (this conference

©IJRASET: All Rights are Reserved

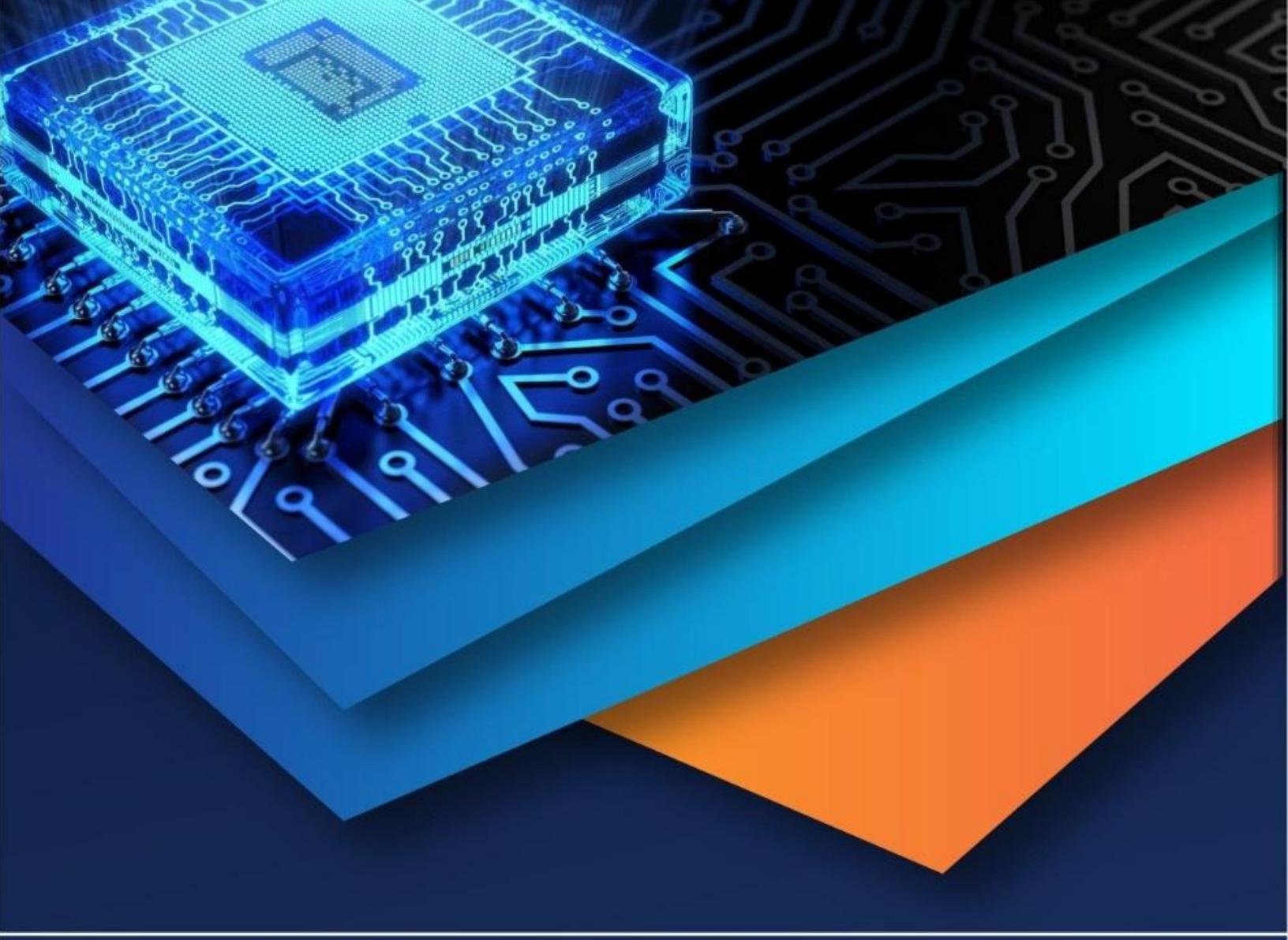

10.22214/IJRASET

45.98

IMPACT FACTOR: 7.129

IMPACT FACTOR: 7.429

INTERNATIONAL JOURNAL FOR RESEARCH

IN APPLIED SCIENCE & ENGINEERING TECHNOLOGY

Call : 08813907089 (24*7 Support on Whatsapp)