iJRASET
International Journal For Research in Applied Science and Engineering Technology

INTERNATIONAL JOURNAL FOR RESEARCH

IN APPLIED SCIENCE & ENGINEERING TECHNOLOGY

Volume: 8 **Issue:** V **Month of publication:** May 2020

DOI: http://doi.org/10.22214/ijraset.2020.5167

www.ijraset.com

Call: 08813907089 | E-mail ID: ijraset@gmail.com

International Journal for Research in Applied Science & Engineering Technology (IJRASET)
ISSN: 2321-9653; IC Value: 45.98; SJ Impact Factor: 7.429
Volume 8 Issue V May 2020- Available at www.ijraset.com

Analytical Assessment of Vehicular Pollution and Status Monitoring using RFID based on Intelligence of Things

Shaurya Mathur[1], Chahat Sharma[2]
[1, 2]*Inderprastha Engineering College, Dr. APJ Abdul Kalam Technical University Ghaziabad, Uttar Pradesh, India*

Abstract: ***Degradation of air quality results in a complex interaction between natural and anthropogenic conditions in the environment. With the rapid inclination of the population towards cities and urbanization, a heavy amount of particulates and toxic gases are emitted. Vehicles are the prime source of atmospheric pollution. Wireless technology is the latest and the best practice in real-time applications for collecting the information about the niche. It gives us an advantage of knowing about the statistics of the surroundings and briefs us about the preventions which we can take in the future to lower the readings which have the potential to harm the system. The main objective is to introduce vehicular pollution monitoring system using Intelligence of Things (IoT) which is capable of detecting vehicles causing pollution using RFID technology and measures various types of pollutants, and its level in the air, using an intelligent methodology. It is also a good means which could be used by the environmental agencies which are pursuing research on the vulnerabilities in our surroundings, caused due to air pollution. A well-defined record based statistical data is also shared with the owner of the vehicle, the traffic department and agencies of national environment for further research and development purposes.***

Keywords: Intelligence of Things, Radio Frequency Identification, Artificial Intelligence, Internet of Things

I. INTRODUCTION

The Internet has become a vital part of our daily life. It is the most useful and the most advanced technology in today's world. It not only provides the information but also helps to make devices and applications more efficient and smart. With interactive user interfaces and automated software, it has become easy to operate and maintain huge chunks of information stored in it. In other words, the Internet can also be called "The gateway to the future".

Due to its user-friendly nature and usability, the demand of internet is increasing day by day at a faster pace. An establishment of a smart and an intelligent interconnection between the embedded devices is still under development. A combination of hardware and devices must be selected such that the internal connectivity, as well as the user interactivity, is ensured. To implement such factors practically, vehicular pollution testing and status monitoring are considered for use.

The research in vehicular pollution and status monitoring is simulated by the concept of vehicle pollution testing, in which various harmful particulates are tested in a vehicle through sensors and the pollution level is detected from the smoke emissions, coming from the vehicle.

The levels of the emissions are stored on the web are compared with the existing values pre fetched already on the database. The use of Radio Frequency Identification is also used for the detection of vehicles with a unique identification number and further using it for storage purposes.

This paper summarises the various techniques to check the vehicular pollution and let know about the basic concept of it. The literature survey structures the basic methods, factors, areas of improvement where we could convert and optimize into a more efficient system. The scope of the system is to improve and enhance the system with more interactive usability.

II. BASIC TERMINOLOGIES

A. Internet of Things

IOT is a concept which defines the interconnection between various embedded electronic devices and the Internet. The embedded devices can include any of the electronic devices, whether household, vehicles or physical devices which consists of actuators and sensors. The sole reason for focussing on the emergence of IoT is to exchange data between the devices in order to make them more efficient and interactive.

©IJRASET: All Rights are Reserved

B. Artificial Intelligence

This concept is similar to the Natural Intelligence but the factor of a human brain is replaced by machines. The artificial intelligence is the branch of computer science that deals with creating machines which have the capability of calculating and performing operations without any external information provided. The artificial intelligence is the most advanced concept of computing and requires the machine to think and act rationally as well as humanly.

C. Intelligence Of Things

In earlier times, the sensors and other embedded components in the device were used to consume a huge volume of data. This made it difficult for the devices to operate efficiently and made it internet connectivity almost impossible. However, the combination of the Internet of Things (IoT) and Artificial Intelligence made it possible. Collectively known as Intelligence of Things, it helped in making embedded devices more intelligent and smart and hence also increased the interaction with the internet. Using this concept, the sensors and actuators can communicate within the device and can process the input without any external intervention. This concept is still under development but it can make more optimal and organized version of the Internet as well as the devices. The scope of this concept is currently limited to only those areas where the application of artificial intelligence resides.

D. Status Monitoring of Vehicles

The The vehicles are classified under categories based on the levels of particulate emissions also known as pollutant particulate matter (ppm). The vehicle emissions are absorbed by the sensors connected to the device. The device (as shown in Table 1.1) consists of an Arduino board (ATmega 328) which consists of dielectric sensors and RFID device used to detect distinct vehicle id registered. The circuit also consists of a combination of registers and transistors connected in a Darlington circuit. An LCD screen is also attached with the complete system. The overall system can be connected with the internet server database.

When the sensors are activated and absorb the emissions from a vehicle, the dielectric sensors read the emission levels and transfer the data to the Arduino which further sends the data to the database through a distributed network system. The database or the server end accepts the data from the device and maps it with its unique identification prefetched in the database. The actual calculations and operations are performed and further, the result is generated and delivered to the client end.

The Intelligence of Things allows the microcontroller board to intelligently perform the calculations and reduce the burden on the main system. It makes sure that the microcontroller must be capable enough such that they could individually perform the operations, hence reducing the load on the server and further ensuring smooth connectivity of the internet.

E. Identification of Vehicle

Each vehicle is allotted a separate radio frequency tag which is issued at the time of registration by the authority. Every vehicle is given a unique tag for a unique row in the database. Whenever a test is being conducted, the RFID reader, connected with the microcontroller unit is used to connect with the device with the help of radio waves (as shown in Table 1.1). Once the vehicle is identified, the RFID reader maps the information of the tag with the server and database and further performs operations.

III. LITERATURE REVIEW

There have been several models and prototypes which have been analyzed and are further considered under the research work. Various methods have been proposed in order to set up an efficient network among the devices in the embedded system and make sure an optimized connection within the system. A brief discussion stating the advantages and the disadvantages of the model are discussed as follows.

Mohd and Sarijari (2008) have proposed a multi-hop data aggregation subroutine which increases the monitoring range of the sensors. An RF Xbee module has been designed to configure gain Wasp note technical guide for signal conditioning. Different types of pollution levels have been deployed for monitoring with five node networks to test and gather an optimized data from the research under various physical conditions.

Raja et al (2011) used wireless sensor networks (WSN) in real time environment, also called, a real-time wireless air pollution monitoring system using commercial available photoelectric gas sensors for analyzing the concentration of gas levels like CO2, NO2, CO, and O2. A moderately-light weighing middleware and a user interface connected to the web to display the data in the form of statistics and digits from the test cases were developed.

Tajne et al (2011) stated that traditional air quality status monitoring approaches are limited with respect to cost, and installation sites. Further, air quality monitoring devices built using traditional equipment (MS, GC, FTIR) have contiguous and profane

©IJRASET: All Rights are Reserved

limitations, due to humanly conduct of measurements. According to the authors, the Wireless Sensor Network (WSN) is evolving at a faster pace with a number of plausible applications in various sectors of daily life, such as structural and habitat monitoring, pharmacy, military surveillance. They have proposed an air pollution monitoring system comprising of sensor WSN named as Mica2 mote, which allows chunks of data to deliver to a server. The sensor nodes receive data unrestrictedly and the network is used for the passage of data to one or more stations that shall further deliver it to an intelligent network server.

Abujayyab et al (2006) have proposed a hypothetical model of a system which is based on distant wireless communication for air pollution monitoring.

In another study, Kwon et al (2007) developed an intelligent air pollution monitoring system using ZigBee networks with a wireless microcontroller board in which dust, CO2, temperature, and humidity sensors are embedded. Its monitoring range is 270 m and is used for monitoring air quality over a fixed diameter.

Jung et al (2008) have installed an air pollution geo-sensor network consisting of routers at remote locations for monitoring several air pollutants.

Pummakarnchana et al (2005) have an opinion that economic growth and urbanization are proceeding at a rapid rate, followed by exceeding emissions of air polluting resources. They reiterate the crucial need for monitoring systems to ensure fast detection of air pollution levels and for dependable quantification of polluting resources in order to avert further deterioration in polluting levels. The Authors state that a new generation of detectors, photoelectric gas sensors, offer best alternatives for habitat monitoring due to lower cost, moderately lightweight, small size and also due to their portability so as to collect data that can be transmitted through a Wireless GIS network system as a swift monitoring tool to the general public. In their research, they have designed and developed a compact device, comprising a photoelectric gas sensor (NOx) integrated to a 33 Personal Digital Assistant (PDA) connected through Bluetooth communication tools and Global Positioning System (GPS) for rapid promulgation of information on pollution levels at multiple levels simultaneously. They have conducted air pollution monitoring over comprehensive areas in Bangkok, Thailand and suggested that the Air Quality report generated can be advertised using Internet GIS to provide real-time information service for the PCD, for advertising public awareness and refined public participation.

Emily et al (2013) researched that historical path for monitoring air pollution generally use extensive, convoluted, static equipment (Chow 1995; Fehsenfeld et al 2004) that work based on the manner MS, GC, FTIR, etc limit the data storage and access to it. This sample is changing with the fallout of lower-cost, convenient-to-use, and compact air pollution sensors that provide big-time aim data in near real time. These attributes provide liberty for improvement of the range of actual air pollution monitoring capacity and perhaps provide a course to new monitoring applications. Sensors associated with to advances in computing and communication also provide enhanced availability and accessibility of air monitoring data. Sensor devices are presently accessible for monitoring a range. However, threats remain, regarding the usage of sensors and its data, essentially sensor data attribute and provenance of meaningful instruction from data sets.

Korotcenkov (2007) has concentrated on the conductometric semiconducting metal oxide gas sensors (especially surface conductive metal oxide). According to the author, they contain presently most examined groups of gas sensors. They have captivated so much attention in the field of gas sensing under atmospheric conditions due to their cheapness and adaptability in the production of their use and action of many application fields and a huge number of evident gases. As per the author's review, there are diverse researchers who have presented that the fluctuating interaction of the gas with the facial surface of the material is a characteristic of conduct metric semiconducting metal oxide gas sensors.

Capone et al (2003) are of the reaction that the demand for gas disclosure and monitoring has grown awareness about the need to preserve the environmental resources. According to them, the dielectric gas sensors based on an array of principles and materials, are the optimal choice for this purpose. They also say that a considerable interest shown by industrial and scientific world on dielectric gas sensors is due their diverse advantages, like tiny sizes, high sensitivity in detecting very low absorption (at level of ppm or even ppb) of an ample range of gaseous chemical compounds, possibility of internet- based operation and due to possible cheap bench production.

In the paper proposed by Duk-Dong Lee and Dae-Sik Lee (2001), the natural environment has become contaminated and is rapidly declining due to the climatic growth in industrial development. Thus, monitoring and domination of such pollutants are urgent for prevention of environmental catastrophe. Use of traditional cogent instruments for survey purpose is time engrossing, expensive and scarcely used in real-time in the field. An optimal choice is a use of solid-state gas sensors that are robust with functional applications and cheap. They have also presented resemblance between cogent instruments and explained about the various gas sensors especially semiconducting type, capacitor type, and electrolyte types sensors.

©IJRASET: All Rights are Reserved

IV. CONCLUSIONS AND FUTURE SCOPE

The main aim of this paper is to ensure general understanding towards the concept of Intelligence of Things with the help of vehicular pollution and status monitoring. After in-depth research about the vehicular pollution monitoring, it has been concluded that the information collected from the microcontrollers with the help of sensors actually helps in understanding the problem about the domain and also helps in providing the survey and the information related with the pollution levels such that the future environmental conditions are not compromised. Vehicular pollution monitoring system has been a part of the contribution to saving the environment as it gives us the precautions and the other relevant data which we could further research on and preserve our niche. The future work requires the reanalysis of the circuit diagrams and choosing the most economic and cheap hardware make a cost-optimal and more efficient model. Further, the selection of the database administrator is also under reconsideration as SQL is easier to implement. After the decision related to components is finalized, the further task is assembly followed by embedded coding in the microcontroller such that an intelligent interconnectivity within the sensor and other components is ensured. The device will work most efficiently if the system is distributed and the smooth internet connectivity is ensured.

REFERENCES

[1] Aijaz, A., Aghvami, A. H. "Cognitive Machine-to- Machine Communications- Things: A Protocol Stack Perspective" Internet of Things Journal, IEEE, JAN 2015.
[2] An Internet of Things Example: Classrooms Access Control over Near Field Communication Sensors 2014, 14, 6998-7012; doi: 10.3390/s140406998.
[3] An Internet of Things Example: Classrooms Access Control over Near Field
[4] Charalampos Doukas and Ilias Maglogiannis "Bringing IoT and Cloud Computing towards Pervasive International Conference on Innovative Mobile and Internet Services in Ubiquitous Computing, 2012.
[5] European Commission Information Society, Internet of Things in 2020: A Roadmap for the Future [Online]. Available: www.iot- visitthefuture.eu.
[6] L. Atzori, A. Iera, and G. Morabito, "The internet of things: A survey,"
[7] M. A. Feki, F. Kawsar,M. Boussard, and L. Trappeniers,"The Internet of Things".
[8] Wu He, Gongjun Yan, and Li Da Xu,Senior Member, IEEE "DevelopingVehicular Data Cloud Services in the iot Environment".
[9] Robert Frederick, "The Intelligence of Things: A world connected of device, people and things"
[10] Arthur Norman, "Ambient Intelligence".
[11] Sudha Jhamte, "IOT Disruptions".
[12] Phillip C, Jackson Jr., "Introduction to Artificial Intelligence".

Table 1.1 hardware of device for status monitoring of the vehicle.

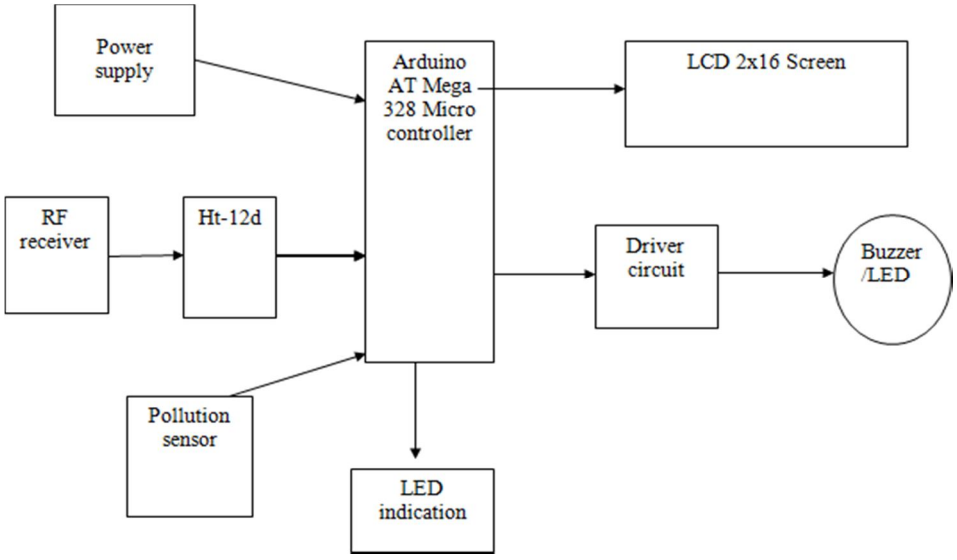

©IJRASET: All Rights are Reserved

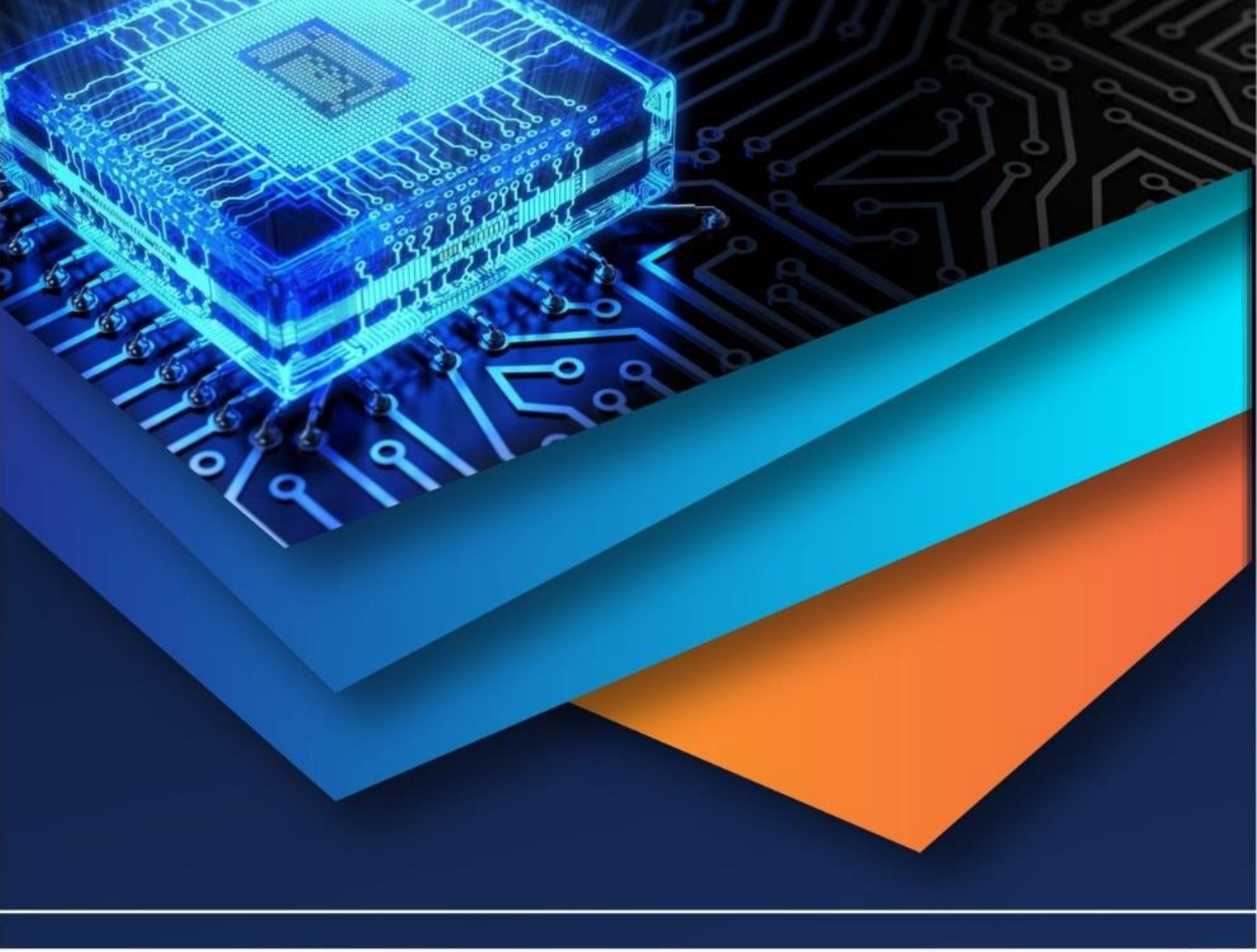

10.22214/IJRASET

45.98

IMPACT FACTOR: 7.129

IMPACT FACTOR: 7.429

INTERNATIONAL JOURNAL FOR RESEARCH

IN APPLIED SCIENCE & ENGINEERING TECHNOLOGY

Call : 08813907089 (24*7 Support on Whatsapp)