iJRASET
International Journal For Research in Applied Science and Engineering Technology

INTERNATIONAL JOURNAL FOR RESEARCH

IN APPLIED SCIENCE & ENGINEERING TECHNOLOGY

Volume: 8 **Issue:** V **Month of publication:** May 2020

DOI: http://doi.org/10.22214/ijraset.2020.5228

www.ijraset.com

Call: 08813907089 | E-mail ID: ijraset@gmail.com

International Journal for Research in Applied Science & Engineering Technology (IJRASET)
ISSN: 2321-9653; IC Value: 45.98; SJ Impact Factor: 7.429
Volume 8 Issue V May 2020- Available at www.ijraset.com

A Novel Approach for Ammonia Leakage Detection using Sensors SW-420, MQ-137, DS 1820 based Technology

L. Satya Veni[1], M. Manikanta[2], P. Subrahmanyam[3], K. Ramya[4], P. Akhil[5], Assist Prof. Vajoorbi Mohammad[5]
[1, 2, 3, 4]Student, [5]Assistant Professor, Electrical Department, V.S.M College of Engineering, Ramachandrapuram.

Abstract: In this paper we are focusing on ammonia refrigeration process. The ammonia refrigeration is one of the older types of refrigeration that is still used today, particularly any leakage at the compressor, we here introduces new challenges for ammonia refrigeration process. Across the world the refrigeration systems are developing the industrial sector during ammonia leakage we are using high pressure and low pressure switches and ammonia leakage sensors, vibration sensors, temperature sensors for motor which is used in compressor in this system. Due to ammonia leakage to avoid dangerous health hazards we are closing the ammonia valves for ESD with the help of sensors based technology.
Keywords: ESD-Emergency Shutdown.

I. INTRODUCTION

Ammonia is considered a high health hazard because it is corrosive to the skin, Eyes and lungs. The safety refrigeration operators and maintains personnel is enhanced by their training in and understanding of the facilities operating and maintenance procedures before performing routine tasks. The safety refrigeration operators and maintains personnel is enhanced by their training in and understanding of the facilities operating and maintenance procedures before performing routine tasks. A compressor which increases the pressure of a gas by reducing its volume. Liquids are relatively incompressible. In the cycle, the ammonia gas is compressed using the compressor which causes it to heat up as it is pressurized. Ammonia refrigeration system has a compressor which is well utilized in food processing industries as well as in beverages but from last few years due to ammonia leakage at valves used in compressor which is very hazardous to human life. So we are focusing on protection of ammonia based refrigeration system with compressor and motor control Protection system.

II. MAIN COMPONENTS

A. Sensors
B. Pressure switches
C. Arduino
D. LDR
E. Expansion Valve
F. Heat exchanger
G. LCD display
H. Buzzer
I. Heat exchanger
J. Liquid separator

III. WORKING

Ammonia refrigeration process in Norma condition:

A. The low-pressure ammonia in vapour state as given as input to compressor, so the high pressure ammonia which is the output of compressor is given as input to the evaporator condenser.
B. High pressure ammonia in vapour state is converted into high pressure ammonia in liquid state with the help of evaporator condenser.
C. The high pressure ammonia in liquid form is send to receiver tank. From the receiver tank is send to expansion valve. It decreases the temperature and also pressure of the ammonia. So that chilled ammonia is available.
D. This chilled ammonia is send to PHE here the liquid ammonia is converted into low pressure liquid and this is send to liquid separator.

1) Ammonia Refrigeration Process In Abnormal Condition

©IJRASET: All Rights are Reserved

a) They may be heavy vibration at compressor, there May be high pressure, low pressure and differential pressure during flow of ammonia. There may be ammonia leakage Compensation:

2) *The Solution To All These Problems Is This Novel Approach*

a) In this we are using sensors, pressure switches, micro controller, buzzer, display. So, for the first consequences that are heavy vibration at compressor can be rectified with help of vibrating sensor and also it activates the buzzer.

b) To rectify the secondary consequences we are high pressure trip, low and differential pressure trip. So, that we can alert the operators.

c) To rectify the third consequences, the ammoni sensor will sense the ammonia concentration in air. So that the microcontroller passes the signal relays, buzzer and display. The ammonia concentration in air then totally display will indicate emergency shut down and equate now with help of buzzer. We can alter the operators and water sprinkles relay will be activated.

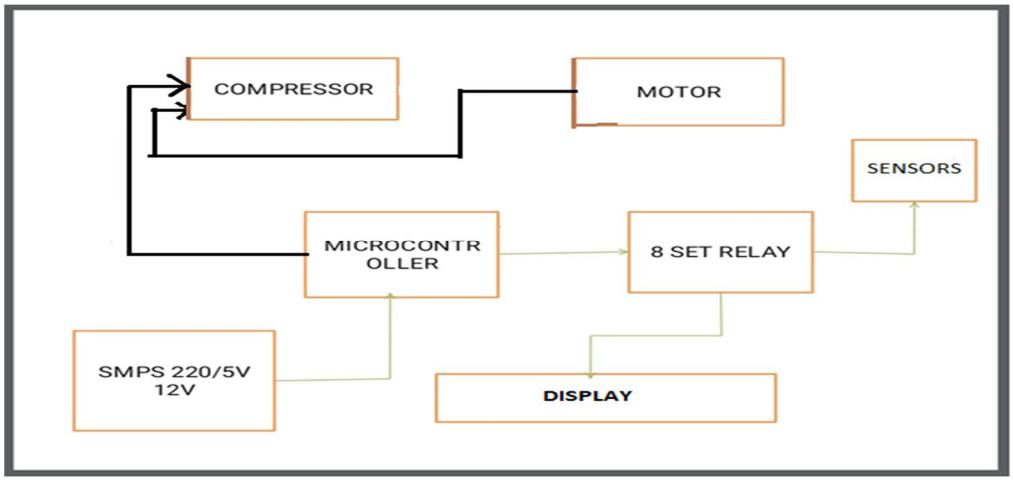

Fig: BLOCK DIAGRAM

3) *Plate heat Exchanger:* In plate heat exchanger we have plates filled with ammonia and glycol in alternative pattern. In plate heat exchanger ammonia will reduces the temperature of glycol which is send to secondary refrigeration system. A plate Heat Exchanger is a unit which transfers heat continuously from one media to another media without adding energy to the process. The basic concept of a plate and frame Heat Exchanger is two liquids flowing on either side of a thin corrugated metal plate so heat may be easily transferred between the two. The plates are compressed by means of tie bolts between a stationary frame part (called the head) and a movable frame part (called the follower).

The plate Heat Exchanger efficiency requires less floor space compared to other types of Heat Transfer equipment and is lighter in weight.

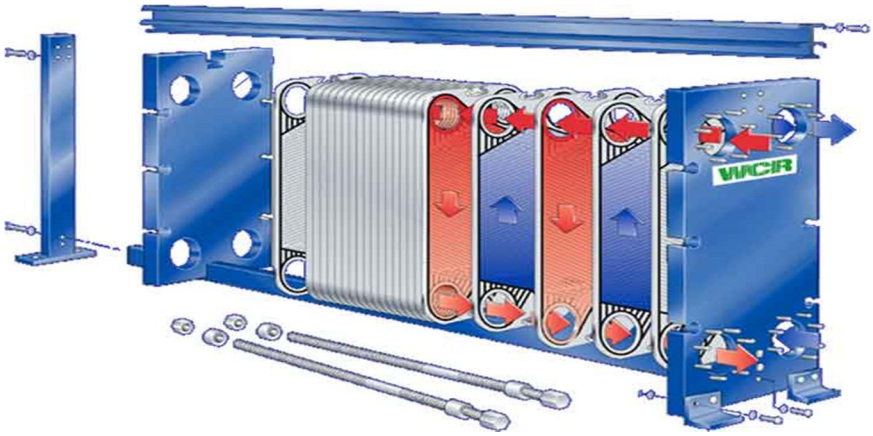

Fig: Plateheatexchanger

4) *Sensors:* In the broadest definition, a sensor is a device, module, machine, or subsystem whose purpose is to detect events or

©IJRASET: All Rights are Reserved

changes in its environment and send the information to other electronics, frequently a computer processor. A sensor is always used with other electronics. Sensors are used in everyday objects such as touch sensitive elevator buttons (tactile sensor) and lamps which dim or brighten by touching the base, besides innumerable applications of which most people are never aware.

5) *Types of Sensors*

a) SW-420 Vibrating Sensor

b) MQ-137 Ammonia Sensor

c) DS1820 Temperature Sensor

6) *Relay and Pressure Switches:* A relay is an electrically operated switch. It consists of a set of input terminals for a single or multiple control signals, and a set of operating contact terminals. The switch may have any number of contacts in multiple contact forms, such as make contacts, break contacts, or combinations thereof. Relays are used where it is necessary to control a circuit by an independent low-power signal, or where several circuits must be controlled by one signal. Relays were first used in long-distance telegraph circuits as signal repeaters: they refresh the signal coming in from one circuit by transmitting it on another circuit. Relays were used extensively in telephone exchanges and early computers to perform logical operation. Relays are used wherever it is necessary to control a high power or high voltage circuit with a low power circuit, especially when galvanic isolation is desirable. The first application of relays was in long telegraph lines, where the weak signal received at an intermediate station could control a contact, regenerating the signal for further transmission. High-voltage or high-current devices can be controlled with small, low voltage wiring and pilots switches. Operators can be isolated from the high voltage circuit. Low power devices such as microprocessors can drive relays to control electrical loads beyond their direct drive capability. In an automobile, a starter relay allows the high current of the cranking motor to be controlled with small wiring and contacts in the ignition key. A pressure switch is a form of switch that closes an electrical Contact when a certain set fluid pressure has been reached on its input. On pressure fall, Pressure switches are widely used in industry to automatically supervise and control systems that use pressurized fluids. Another type of pressure switch detects mechanical force; for example, a pressure-sensitive mat is used to automatically open doors on commercial buildings. Such sensors are also used in security alarm applications such as pressure sensitive floors. The function of a Pressure Switch is to provide a path for an electric circuit that is triggered at a certain pressure.

7) *Micro Controller:* Microprocessors are single-chip CPUs used in microcomputers. Microcontrollers and microprocessors are different in three main aspects: hardware architecture, application and instruction set features.

8) *Applications:* Microprocessors are commonly used as a CPU in computers while microcontrollers are found in small, minimum component designs performing control oriented activities. Microprocessor instruction sets are processing intensive. Their instructions operate on nibbles, bites, words, or even double words. Addressing modes provide access to large arrays of data using pointes and offsets. They have instructions to set and clear individual bits and perform bit operations. They have instructions for input/output operations, even timing, enabling and setting priority levels for interrupts caused by external stimuli. Processing power of a microcontroller is much less than a microprocessor.

9) *Evaporator:* An evaporator is a device in a process used to turn the liquid form of a chemical substance such as water into its gaseous-form/vapour. The liquid is evaporated, or vaporized, into a gas form of the targeted substance in that process. Ammonia refrigeration is one of the older types of refrigeration that is still used today. While the average person doesn't realize it, just about all food and drinks that are purchased have been kept cold using ammonia refrigeration at some point along the way. This is because it is a reliable and efficient refrigerant with years of safe, proven utility.

10) *Expansion Valve:* It consisting two springs 1.Pin 2.Diaphrgm it will converts high pressure and medium temperature into low pressure and low temperature with help of super heat adjuster and super heat spring. A thermal expansion valve or thermostatic expansion valve is a component in refrigeration and air conditioning systems that controls the amount of refrigerant released into the evaporator thereby keeping superheat, that is, the difference between the current refrigerant temperature at the evaporator outlet and its saturation temperature at the current pressure, at a stable value, ensuring that the only phase in which the refrigerant leaves the evaporator is vapour, and, at the same time, supplying the evaporators coils with the optimal amount of liquid refrigerant to achieve the optimal heat exchange rate allowed by that evaporator. The expansion valve removes pressure from the liquid refrigerant to allow expansion or change of state from a liquid to a vapour in the evaporator. The high pressure liquid refrigerant entering the expansion valve is quite warm.

11) *Condenser:* It wills converts high pressure vapour into high pressure liquid with help of coolants (fans and water tanks).

©IJRASET: All Rights are Reserved

Condensers and evaporators are basically heat exchangers in which the refrigerant undergoes a phase change. Next to compressors, proper design and selection of condensers and evaporators is very important for satisfactory performance of any refrigeration system. Since both condensers and evaporators are essentially heat exchangers, they have many things in common as far as the design of these components is concerned. However, differences exist as far as the heat transfer phenomenon is concerned. In condensers the refrigerant vapour condenses by rejecting heat to an external fluid, which acts as a heat sink. Normally, the external fluid does not undergo any phase change, except in some special cases such as in cascade condensers, where the external fluid (another refrigerant) evaporates. In evaporators, the liquid refrigerant evaporates by extracting heat from an external fluid (low temperature heat source). The external fluid may not undergo phase change, for example if the system is used for sensibly cooling water, air or some other fluid. There are many refrigeration and air conditioning applications, where the external fluid also undergoes phase change. For example, in a typical summer air conditioning system, the moist air is dehumidified by condensing water vapour and then, removing the condensed liquid water. In many low temperature refrigeration applications freezing or frosting of evaporators takes place.

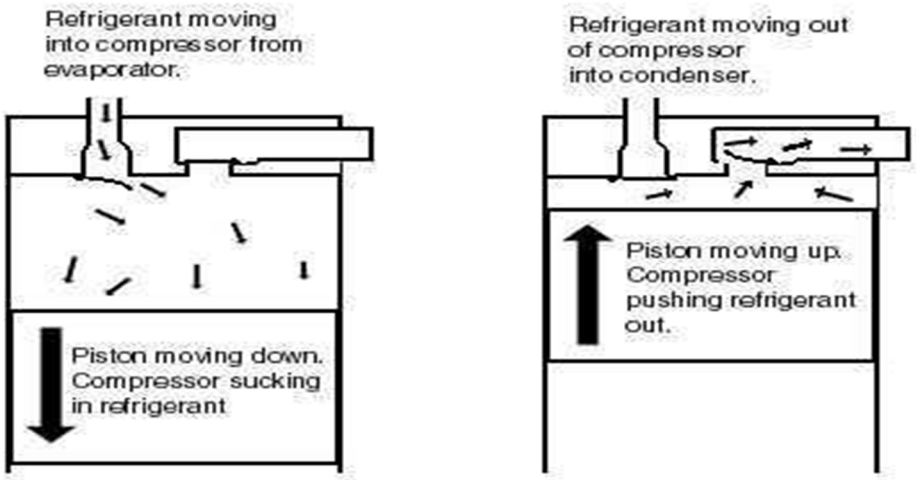

Fig: Operation of Compressor

IV. RESULT AND DISCUSSION

For ammonia refrigeration process there may be heavy vibration at compressor there May be high pressure, low pressure and differential pressure during flow of ammonia. There may be ammonia leakage Compensation: The solution to all these problems is "a novel approach of ammonia gas detection using sensors based technique "In this we are using sensors, pressure switches, micro controller, buzzer, display. So, for the first consequences that are heavy vibration at compressor can be rectified with help of vibrating sensor and also it activates the buzzer. To rectify the secondary consequences we are high pressure trip, low and differential pressure trip. So, that we can alert the operators. To rectify the third consequences, the ammonia sensor will sense the ammonia concentration in air. So that the microcontroller passes the signal relays, buzzer and display. The ammonia concentration in air then totally display will indicate emergency shut down and equate now with help of buzzer. We can alert the operators and water sprinkles relay will be activated.

V. CONCLUSION

The control circuit for the novel approach was based on ATMEGA 2560 microcontroller. This micro controller was the brain of the entire protection system, and it was programmed to detect the ammonia, vibration and temperature through sensors and the compressor and refrigeration process. The protection system implementation is successfully achieved with complete design by using the ATMEGA 2560 microcontroller. Suitable components and motor are used for the prototype model. This can be extended with water curtains or water sprinklers during hazardous situations of ammonia leakage.

REFERENCES

©IJRASET: All Rights are Reserved

[1] Dr. R.K. Banal, A text book of Strength of Materials, Laxmi Publications (P) Ltd.
[2] R.S. Khurmi, J.K. Gupta, A textbook of Machine Design, S.Chand Publishing House.
[3] V.B Bhandari, Design of Machine Elements, The *McGraw-Hill* companies.
[4] Thermal Conductivity Measurements of Liquid Ammonia by the Transient Short-Hot-Wire Method May 2020International Journal of Thermo physics ,DOI: 10.1007/s10765-020-02633-8
[5] Theoretical and Practical Ammonia Refrigeration: a Work of Reference for Engineers and Others Employed in the Management of Ice and Refrigeration Machinery by Redwood, Iltyd I ISBN/EAN 9783337163938
[6] AN ECO FRIENDLY(SOLAR) FOUR WHEELER BLDC MOTOR International Research Journal of Modernization in Engineering Technology and Volume:02/Issue:05/May-2020 e-ISSN:2582-5208

©IJRASET: All Rights are Reserved

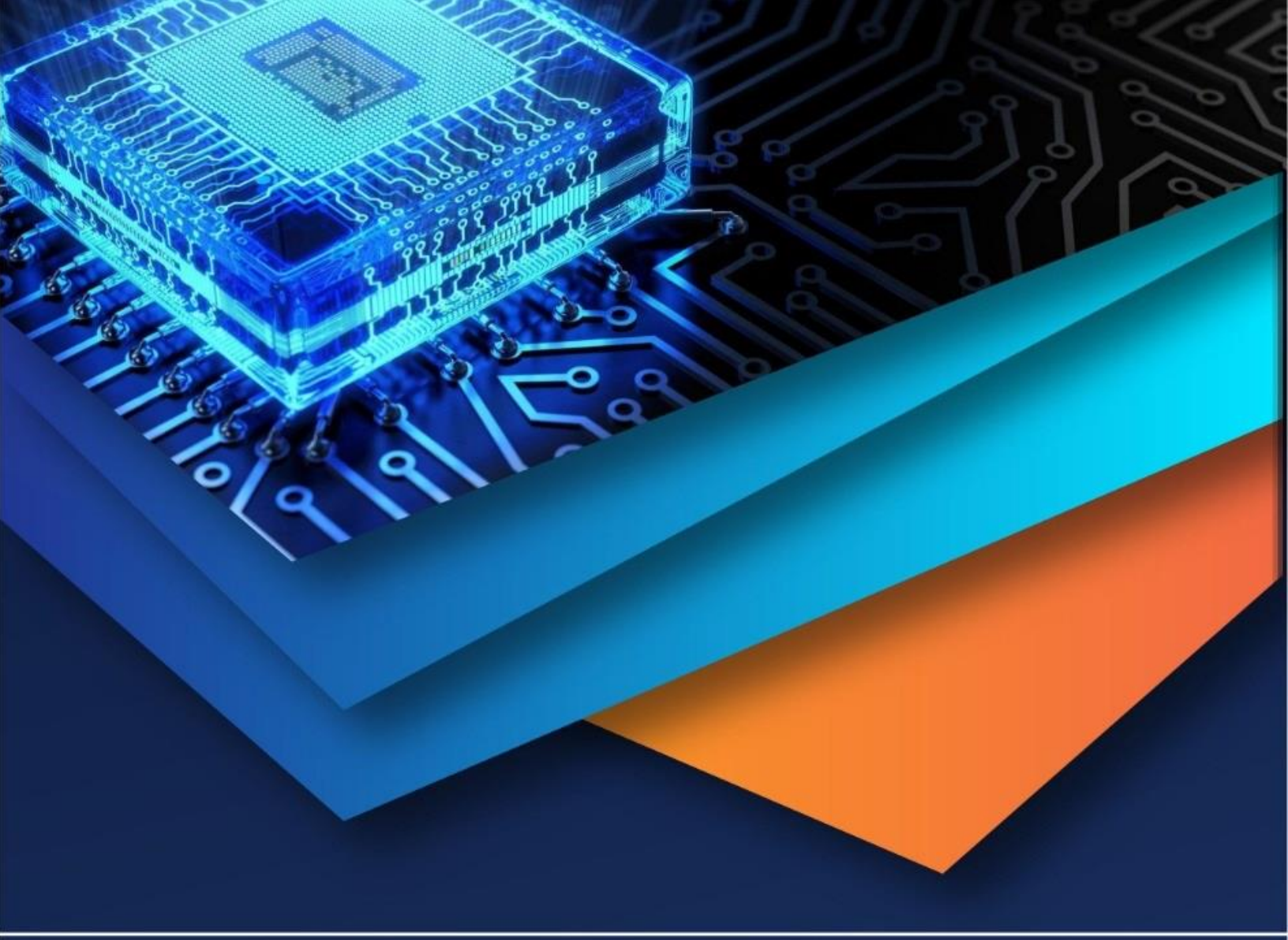

10.22214/IJRASET

45.98

IMPACT FACTOR: 7.129

IMPACT FACTOR: 7.429

INTERNATIONAL JOURNAL FOR RESEARCH

IN APPLIED SCIENCE & ENGINEERING TECHNOLOGY

Call : 08813907089 (24*7 Support on Whatsapp)