iJRASET
International Journal For Research in
Applied Science and Engineering Technology

INTERNATIONAL JOURNAL FOR RESEARCH

IN APPLIED SCIENCE & ENGINEERING TECHNOLOGY

Volume: 9 **Issue:** II **Month of publication:** February 2021

DOI: https://doi.org/10.22214/ijraset.2021.33058

www.ijraset.com

Call: 08813907089 | E-mail ID: ijraset@gmail.com

International Journal for Research in Applied Science & Engineering Technology (IJRASET)
ISSN: 2321-9653; IC Value: 45.98; SJ Impact Factor: 7.429
Volume 9 Issue II Feb 2021- Available at www.ijraset.com

Fuzzy Controller based Hybrid Energy Management System for Electric Vehicle

Kamal Kishore[1], Er. Ashwani Kumar[2]
[1]*M.Tech Reserarch Scholar,* [2]*Asstt Professor, Hindu College of Engineering, Sonipat, Haryana*

Abstract: ***Hybrid energy system provides alternative solution for better use in renewable energy system. The use of electric vehicle technology plays a crucial role in playing solution for environmental concern. This work provides fuzzy controller based hybrid energy management system of battery for electric vehicle. Some intelligent techniques are used for optimized the performance of system. First part of system describes the battery with supercapacitor with PV array and then second part describes the fuzzy based controlling system for monitoring the state of battery. The use of fuzzy provides the reduction of any other conventional method in system. All simulations are done with MATLAB/Simulink Model.***
Keywords: Hybrid Electric Vehicle, Battery Management System, PSO, Optimization etc.

I. INTRODUCTION

The significant plan difficulties in electric vehicle power train with cross breed energy stockpiling frameworks lie in ideal estimating of the sources, DC/DC converter regulator, and engine drive plans to interface between the energy frameworks and electric engine to fulfil the ideal need with improved execution. Joined use of various energy stockpiling frameworks in an electric vehicle allows the framework to abuse the various sources in appropriate opportunity to expand the framework effectiveness. Notwithstanding, to acquire high usage efficiencies, the force electronic interface, including the DC/DC converter and the DC/AC engine drive, assume a significant part in electric vehicles powertrain. Accordingly, a novel plan of a powertrain framework barring the engine is needed to move and share the requested force from engine to fuel sources with the best wanted effectiveness.

The ceaselessly draining the condition of the soundness of the climate has pushed analysts to lead a far-reaching assessment of fuel-cycle emanations and energy use at the worldwide level. Studies show that the expansion of the CO2 discharge accounted by transportation is about 22% from 14 billion tons to 31 billion tons in the course of recent years. Universally, private vehicle takes up half of the oil utilization and adds to 77% of carbon monoxide and 49% of nitrogen oxide outflows [3]. The pace of ozone harming substance emanation, alongside the developing interest for petroleum derivatives on the planet has advanced the requirement for elective transportation fills and progressed vehicle advances. The change from conventional inward ignition (IC) motors to Electrified Vehicles (EVs) makes a significant effect on oil reliance and results in maintainable transportation with improved ecological conditions. This mindfulness has prompted the advancement of a time of jolted transportation. Significant automakers, including General Motors, Toyota, Ford, Mercedes, Volvo, BMW, and Nissan are putting resources into the improvement of new age of energy proficient vehicles called Extended Range Electric Vehicles (EREV), module half breed electric vehicles (PHEVs), and all-battery electric vehicles (BEVs). Moreover, Tesla Motors, one of the significant investors of the electric vehicle transport industry, transport BEVs.

From literature survey, some authors presented that Electric vehicles can possibly fill in for regular vehicles and to add to the maintainable improvement of the transportation area around the world, for example decrease of ozone depleting substance and molecule outflows. There was a global agreement that the improvement of the supportability of electric vehicles must be broke down based on life cycle appraisal (LCA) including the creation, activity and the finish of life of the vehicles. In view of LCA exercises in the 17 part nations, the International Energy Agency (IEA) Implementing Agreement on Hybrid and Electric Vehicles (IA-HEV) worked in a Task on the LCA of electric vehicles. In this Task 19 "Life Cycle Assessment of Electric Vehicles - From crude material assets to squander the executives of vehicles with an electric drive train" the main points of contention of applying LCA to EVs & HEVs were distinguished and applied in different contextual investigations.

Some presented similar examination of different sorts of energy stockpiling gadgets. Highlights of joint batteries and supercapacitors application as a cross breed electric force stockpiling are thought of. A numerical model of a mixture energy stockpiling gadget was worked to assess the proficiency of sharing and deciding the utilizations of such stockpiling gadgets. Some presented that electric vehicles have acquired fascination all through the world because of its favourable position of green innovation and diminished discharge.

©IJRASET: All Rights are Reserved

In addition, they are being controlled by battery would be the most ideal alternative of supplanting current petroleum or gas subordinate vehicles. There are a few downsides related with battery; it has restricted lifetime and cost is high. Consequently, it is hybridized with other energy \ stockpiling frameworks, for example, Ultra capacitor/Supercapacitor. This work utilizes a fuzzy and Pi control for Energy the board framework for Electric Vehicle and Simulation climate picked is Matlab/Simulink.
The remainder of paper is requested as follows. In segment II, it provides the concept of optimal sizing of electric hybrid sources. In Section III, It characterizes the general battery management system. Proposed model is presented in Section IV. Results are presented in Section V. At last, conclusion is clarified in Section VI.

II. OPTIMAL SIZING OF HYBRID SOURCES IN ELECTRIFIED VEHICLES

Planning an improved energy, the board methodology is of fundamental significance and goes connected at the hip with the general advancement of the vehicle regardless of whether there are profoundly productive segments in the drive-train, using them in a wasteful way will break down the whole even handed of vehicle advancement. The fuel sources and their administration in an electric vehicle keep on being a significant test for automakers to expand the all-electric driving reach. Fuel sources in monetarily accessible electric vehicles are for the most part a battery module, a ultra capacitor (UC) module, or a blend of both Generally, batteries have higher explicit energy than ultra-capacitors, and consequently, can give additional capacity to longer timeframes.
A ultra capacitor normally has higher explicit force than a battery, is more productive, and has a more extended lifetime regarding the quantity of charge/release cycles. Nonetheless, a full-scale level examination of crossover fuel sources was not performed. To influence a far-reaching large-scale level streamlining, it is basic to consider ideal measuring of crossover fuel sources, without hampering the ideal qualities of the vehicle. The test lies in planning an upgraded energy the executive's methodology dependent on cost, space, weight and increasing speed season of the vehicle for appropriate use of the half breed fuel sources and in this way improving the general productivity and financial aspects of the vehicle. Understanding the significance of planning an improved drive-train framework with half and half fuel sources, this examination initially presents a novel multitude knowledge based disconnected energy the executive's system (EMS) for ideal measuring of battery/ultra capacitor crossover fuel sources in EV/HEV.

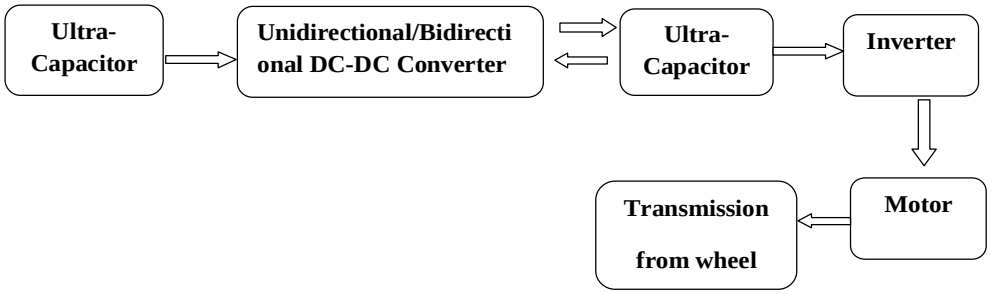

Figure 1: Conventional Schematics of Hybrid Energy Storage Systems [1]

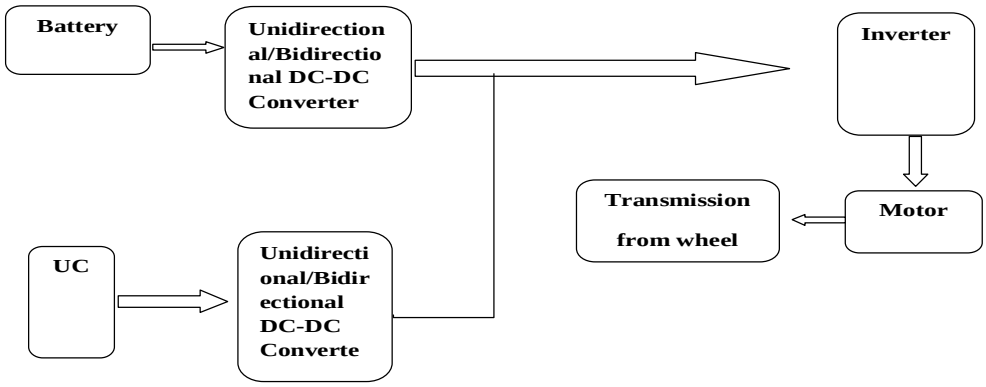

Figure 2: Conventional Schematics of Hybrid Energy Storage Systems Using Two Bidirectional Converters [2]

©IJRASET: All Rights Reserved

Figure 1 shows the regular schematic of a crossover energy stockpiling framework. By utilizing a bi-directional DC/DC converter to interface the ultra capacitor and the battery, the UC voltage can be changed over a wide reach. Additionally, the UC banks ostensible voltage can be lower than the DC interface. Since the battery is associated with the DC interface straightforwardly, the voltage of the DC connection can be kept up generally consistent. In any case, this design has certain detriments. As the UC can just mostly assimilate the regenerative slowing down energy, smooth control isn't gotten. Additionally, an enormous size bidirectional converter is needed to viably deal with the intensity of UC.

Figure 2 presented a substitute geography for the fell association of two bidirectional converters. In this arrangement, the yields of the two converters are associated in equal and subsequently these converters will keep up a similar voltage level as that of the DC interface. One of the significant advantages of this geography is that the evaluated voltage of both the battery and the ultra capacitor can be kept up at a lower esteem when contrasted with the DC connect. Thus, the ultra capacitor voltage can change over a wide reach and it brings about full utilization of the capacitors. The solitary inconvenience of this setup is that two converters are utilized.

III. A GENERAL BATTERY MANAGEMENT SYSTEM

Basically, the connections in this energy chain as of now mirror the essential pieces of a BMS. In more broad terms, the charger can be known as a Power Module (PM). This PM is equipped for charging the battery, yet can likewise control the heap straightforwardly. An overall BMS comprises of a PM, a battery, a DC/DC converter and a heap. The knowledge in the BMS is remembered for screen and control capacities. The screen capacities include the estimation of, for instance, battery voltage, charger status or burden action. The control capacities follow up on the charging and releasing of the battery based on these deliberate factors. Execution of these screen and control capacities ought to guarantee ideal utilization of the battery and ought to forestall the danger of any harm being exacted on the battery. The level of complexity of the BMS will rely upon the usefulness of the screen and control capacities. By and large, the higher this usefulness, the better consideration will be taken of the battery and the more extended its life will be. The usefulness relies upon a few angles:

1) *The Expense of The Versatile Item:* all in all, the extra expense of a BMS should be held low comparative with the expense of the convenient item. Consequently, the usefulness of the screen and control elements of a moderately modest item will commonly be generally low. As an outcome, the BMS will be generally straightforward.
2) *The Highlights of the Versatile Item:* This is firmly identified with the item's expense. A very good quality item will have a bigger number of highlights than a low-finished result. For instance, a top-of-the-line shaver with a 'Minutes Left' sign necessity a greater number of BMS insight than a low-end shaver with no motioning by any means.

A. *Components of Battery Management System*

1) *The Power Module (PM):* The fundamental undertaking of the PM is to charge the battery by changing over electrical energy from the mains into electrical energy appropriate for use in the battery. An option for the mains may be other fuel sources, for example, a vehicle battery or sun powered cells. By and large, the PM can likewise be utilized to control the compact gadget straightforwardly, for instance when the battery is low. The PM can either be a different gadget, for example, a movement charger, or be coordinated inside the convenient gadget, as in for instance shavers. Particularly in the last case, the proficiency of the energy transformation measure must be adequately high, in light of the fact that the less fortunate the effectiveness, the higher the inner temperature of the compact gadget and henceforth that of the battery will be. Extensive stretches at raised temperatures will diminish the battery limit.
2) *The Battery:* A battery's essential assignment is to store energy acquired from the mains or some other outside force source and to deliver it to the heap when required. This empowers a versatile gadget to work without an association with any force source other than a battery. Distinctive battery frameworks with various sciences and various qualities exist. Instances of some normally experienced battery frameworks are nickel-cadmium (NiCd), nickel-metal hydride (NiMH) and lithium-particle (Li-particle) batteries. The attributes of the different battery frameworks change extensively, in any event, for batteries with a similar science, however, for instance, an alternate plan or various added substances. The term battery pack is frequently utilized for separable batteries. Contingent upon the ideal voltage and limit of the battery, a few batteries can be associated in arrangement and additionally in equal inside a battery pack. To maintain a strategic distance from disarray, the fundamental battery building blocks inside the battery pack are regularly alluded to as cells.

©IJRASET: All Rights are Reserved

3) *Electronic Safety Switch for Li-Ion Batteries:* On account of Li-particle batteries, an electronic wellbeing switch must be incorporated with the battery. The battery voltage, current and temperature must be observed and the wellbeing switch must be controlled to guarantee that the battery is never worked in a risky district. The purpose behind this is that battery providers are especially worried about wellbeing issues because of obligation hazards. A voltage range, a greatest current and a most extreme temperature decide the locale inside which it is viewed as protected to utilize a battery. The battery maker decides these cut off points. Outside the protected locale, damaging cycles may begin to happen. Clearly, the battery voltage ought not arrive at the greatest voltage level of the electronic security switch during charging to forestall the danger of current interference during ordinary use. The requests on the precision of the base voltage are less exacting, as the voltage drops rather pointedly when the battery is practically unfilled. This implies that a deviation in the voltage at which the battery is separated from the heap by the wellbeing switch doesn't impact the usable battery limit altogether. The base voltage expected to work the versatile gadget should be picked higher than the base voltage level of the security switch.
4) *Charge-Balancing and Pack Supervisory Electronics inside a Battery Pack:* An alternate requirement for gadgets emerges when a few cells are associated in arrangement inside a battery pack. This is for instance frequently the case in note pad PCs. Due to contrasts between the individual cells inside the battery pack, a specific awkwardness in SoC may exist. For instance, the cells may vary in the most extreme measure of charge that can be put away, or in their inside impedance. These distinctions as of now happen because of assembling difference and will even expand due to maturing. Such maturing impacts might be more regrettable for certain phones than for others in a battery pack. An explanation could be that a few cells become considerably more sultry than others. The event of enormous temperature contrasts between the cells in a battery pack is to a great extent affected by the situation of the cells comparative with the temperature sensor.
5) *Other functions that can be Integrated within A Battery Pack:* Particularly when electronic hardware, for example, a security gadget or a charge-adjusting circuit, is as of now present in a battery pack, it is moderately modest to add additional usefulness. The expansion of some insight to a battery itself is worthwhile, on the grounds that each sort of battery must be drawn nearer with a certain goal in mind. This is particularly valid for versatile items that can be utilized with various battery frameworks. This at last prompts a purported brilliant battery, which can be characterized as a battery-powered battery with a central processor that gathers and conveys present, determined and anticipated battery data to the host framework under programming control.
6) *The DC/DC Converter:* The essential errand of a DC/DC converter in a versatile item is to associate a battery to the different framework parts when the battery voltage doesn't coordinate the voltage required. The battery voltage might be either excessively low or excessively high. In the primary case, DC/DC up-transformation is obviously required. In the last case, DC/DC down change is required when the battery voltage is higher than the greatest permitted supply voltage of the heap. Aside from this be that as it may, from the perspective of productivity it is consistently a smart thought to change over the battery voltage into the base inventory voltage V_{min} required by the heap for the accompanying explanation.

IV. PROPOSED WORK OF SYSTEM

The proposed system model is shown in Fig 3 & 4 respectively. Figure shows the conventional schematic of a hybrid energy storage system. By using a bi-directional DC/DC converter to link the ultra capacitor and the battery, the UC voltage can be varied over a wide range. Moreover, the UC banks nominal voltage can be lower than the DC link. Since the battery is connected to the DC link directly, the voltage of the DC link can be maintained relatively constant. However, this configuration has certain disadvantages. As the UC can only partially absorb the regenerative braking energy, smooth control is not obtained. Moreover, a large size bidirectional converter is required in order to effectively handle the power of UC.

Optimizing the hybrid power sources will be slightly different. If the configuration of the hybrid power sources change, therefore the optimization strategy will be changing in constraints over the DC link and charge/discharge strategy. The use of PSO has fast convergence speed over other stochastic methods. Also, PSO can be easily modified by adjusting its cognitive coefficients which results in a much faster convergence time. A multiple objective function for the PSO based energy management strategy is developed here. Multiple objective functions embrace minimizing the cost, space, and weight of the energy generation system plus the acceleration time. The multiple objective function is formulated to optimize the hybrid energy sources, accounting for design factors such as the costs of the battery and the UC, space and weight of the hybrid energy sources, and the acceleration time of the vehicle, which varies with vehicle mass and all forces applied to vehicle plus the amount of UCs in EVs. It maximizes the battery and UC's life by monitoring and controlling their charge and discharge process.

©IJRASET: All Rights are Reserved

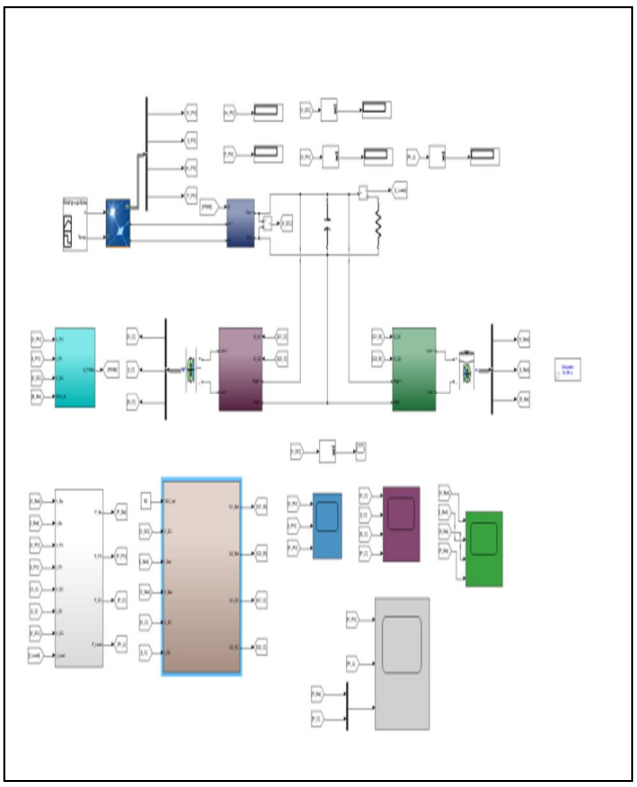

Fig. 3: Proposed Simulink Model

A. PV Module

It is used for solar energy harvesting which is the main source of energy for the sensor node. The output power from PV is not stable and depends on the irradiance and temperature. The output power from PV array is different at different irradiance and temperature level. At the particular irradiance and temperature level, the PV curve of the photovoltaic panel is non-linear and a maximum power point exists. Therefore, for maximum utilization of solar energy, we require a maximum power point tracker (MPPT).

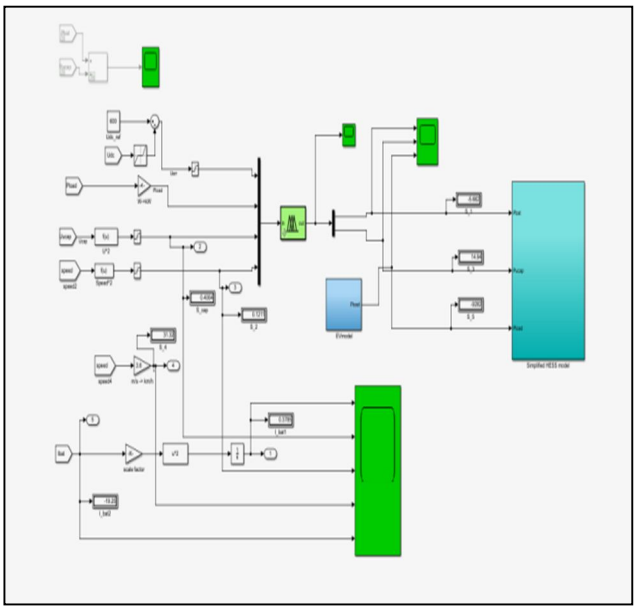

Fig 4: Proposed System Model with Fuzzy-PSO Based Controlling

©IJRASET: All Rights are Reserved

B. Role of Battery and Super Capacitor

Li-ion battery and ELDC are used for electric storage. In which battery is used as primary storage and supercapacitor is used as secondary storage. This hybrid storage technique offers increased lifetime. Due to low leakage charge battery is used for holding the charge for a long time and is discharged only when solar energy is not available and supercapacitor storage is exhausted.

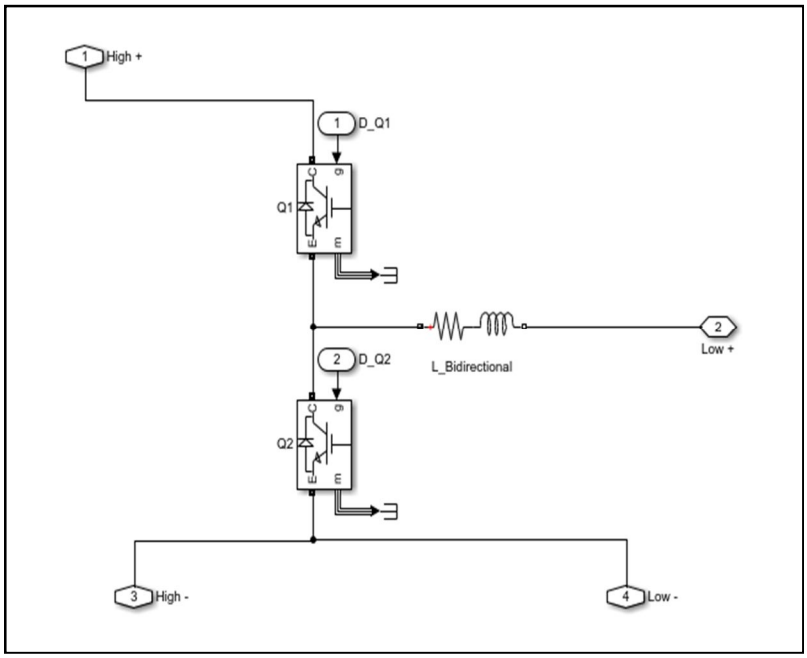

Fig 5: System Model of Battery System

C. PV Cell Model

A solar cell is a solid electric device which consists of a p-n junction fabricated from a semiconductor material of moderate band-gap (usually silicon). It behaves as a normal p-n junction diode in dark and has non-linear V-I characteristics. However, in the presence of light, it absorbs photons having energy greater than the band gap energy. This results in the creation of electron-hole pairs. These charge carriers are separated by internal electric field and result in a current proportional to incident photons.

It consists of a current source in parallel with a diode [8]. The output of the current source is proportional to the incident photon flux this current is called photocurrent. During darkness, the solar cell is not active and behave as an ordinary p-n junction diode and this gets modelled as a diode in the equivalent circuit. It produces neither a current nor a voltage. This comes into action whenever a potential difference exists between the terminals of the solar cell and constitutes a current called Dark current. This diode determines the I-V characteristics of the solar cell.

D. Fuzzy Controller

The system is very dynamic, nonlinear, unpredictable, has a lot of uncertainty and its mathematical model is somehow complicated so the best choice is to use one of the expert-based systems, intelligent, such as fuzzy logic. The fuzzy logic will manage the flow of energy throughout the system to assure high-quality uninterruptible power delivery to the demand regardless of intermittent in the power generation. The controller has three main states as discharging mode which allows battery and fuel cell to support the load, balance mode when supply power equals demand and controller at rest, and lastly, charging mode that allows battery and water electrolysis receive an excess of energy and store it to be used later.

The function of a control mechanism is to maintain certain goals from the system at different desired values. The ideal control system is a linear system which relates its inputs directly to the outputs. Nevertheless, in practice, instabilities affect the system output being controlled and cause deviation from the proposed set points. The closed-loop system uses the signal feedback to correct the controller output to meet the desired value. Controlling a system complex as HESS is difficult to achieve using conditional methods. Therefore, FLC is a more suitable solution since it covers a high range of possible working situations with an acceptable level of uncertainty or lack of future information.

©IJRASET: All Rights are Reserved

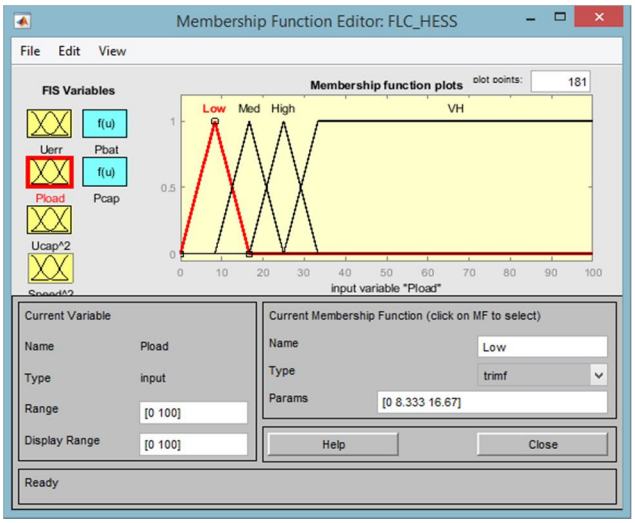

Fig 6: Membership Function in Fuzzy Logic

V. RESULTS & DISCUSSION

The entire system modelling is done in Matlab/Simulink. This system consist of battery with a bidirectional converter and UC with a bidirectional converter. The fuzzy logic controller setup is used with PSO optimization to restore the entire energy during regenerative breaking. During regenerative breaking operation, the UC is charged. And Uc Soc will get increased during regenerative mode of operation. All results are shown with & without fuzzy-PSO to provide effectiveness of system.

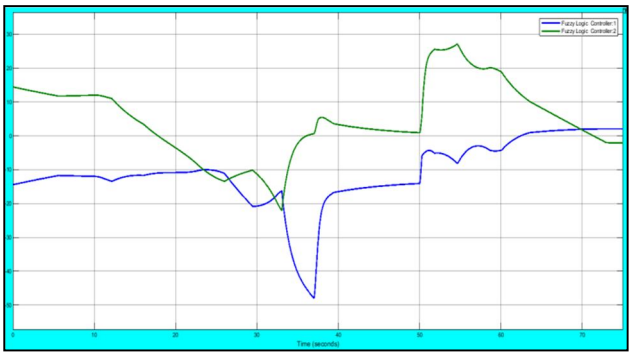

Fig 7: Charge & Discharge Output by Fuzzy Controller

This section provides the HESS results with Fuzzy-PSO system. Fuzzy uses a rule based system with membership function for providing smooth output in terms of power maximization. A membership function is a curve that defines how each point on the input space (or universe of discourse) is mapped to a membership value (or degree of membership) from 0 to 1. Triangular membership functions were used for all the input and output variables in this work. Hit and trial technique was used to develop the membership functions on MATLAB. The use of PSO provides smoothness of results with their optimization.

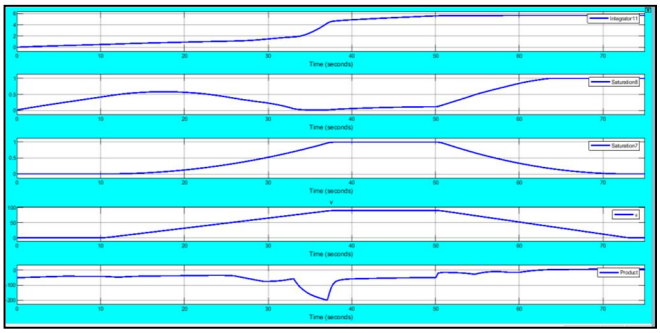

Fig 8: Charge & Discharge Output by Fuzzy Controller

©IJRASET: All Rights Reserved

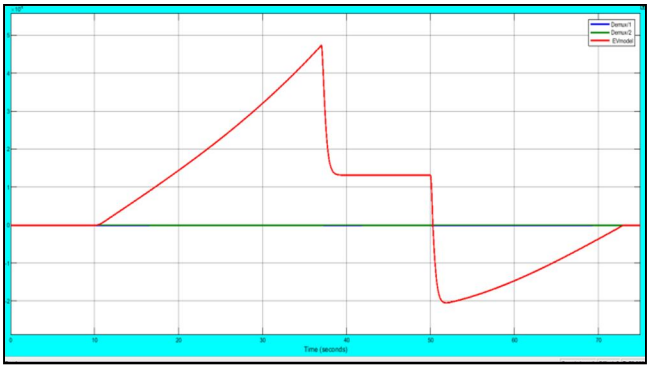

Fig 9: Final Power Output by Fuzzy Controller

VI. CONCLUSIONS

This work provides the hybrid energy system designing with PV array. It also presents the HESS controlling with fuzzy based controller with PSO optimization. The main advantage of the HESS aside from increasing the battery lifetime by reducing the peak currents, is to allow the use of batteries optimized for high specific-energy, while the peak power demands. In this work, a battery-supercapacitor hybrid storage technique is tested for PV array to enhance the lifetime of the array and to increase the computational power of the circuit. The simulation results show that the battery discharge current is reduced to very low levels by software control and supercapacitor is dripped charged from it just before the arrival of peak power, this ensure that the discharge rate of the battery is low which will result in increased lifetime of the battery. This work showed that the use of fuzzy logic control in energy flow management in hybrid energy systems gives the advantage of ease of control design.

REFERENCES

[1] S. Zulkifli &, S. Mohd, "Implementation of Energy Management System for a Split-Parallel Hybrid Electric Vehicle with In-Wheel Motors", 2015.
[2] Y. Hung & T. Chou, "Design and Experimental Verification of an Active Energy Management Module for a Three-Energy-Source Electric Vehicle", 2016.
[3] S. Saib & Z. Hamouda, "Energy Management in a Fuel Cell Hybrid Electric Vehicle using a Fuzzy Logic Approach",2017.
[4] Z. Cai &, B. Chen, "A Fuzzy Control Based Energy Management Strategy for LFP/UC Hybrid Electric Vehicular Energy System",2017.
[5] A. Abdelgadir & J. Y. Alsawalhi, "Energy Management Optimization for an Extended Range Electric Vehicle", 2017.
[6] G. Xu, B. Zhang & S. Zhang, "Multi-Energy Coordination And Schedule Considering Large-Scale Electric Vehicles Penetration",2018.
[7] T. Rout & A. Chowdhury, "A Comparative study of Stand-alone Photo-Voltaic System with Battery storage system and Battery Supercapacitor storage system",2018.
[8] A. Rezaei & J. B. Burl, "Catch Energy Saving Opportunity in Charge Depletion Mode,A Real-Time Controllerfor Plug-in Hybrid ElectricVehicles",2018.
[9] L. Chandra & S. Chanana, "Energy Management of Smart Homes with Energy Storage, Rooftop PV and Electric Vehicle",2018.
[10] O. Vasilkov & Vasiliy S. Dobysh, "Features of Application Hybrid Energy Storage in Power Supply Systems", 2019.
[11] V. Nayanar & Ms. K. Nair, "Fuzzy & PI Controller Based Energy Management Strategy of Battery/ Ultra capacitor For Electric Vehicle", 2019.
[12] K. KOUKA & L. Krichen, "Energy Management Strategy of A Photovoltaic Electric Vehicle Charging Station",2019.
[13] R. Katuri & S. Gorantla, "Performance and Comparative Analysis of Hybrid Controllers Implemented to Hybrid Energy Storage System of Electric Vehicles",2019.
[14] Z. Guan & J. Jiao, "Research on Hybrid Power System of Electric Vehicle and Energy Management Strategy", 2019.
[15] Aruna P &Aruna P, "Review on Energy Management System of Electric Vehicles",2019.
[16] I. Goswami & S. Suhag, "Energy Management in Electric Hybrid Vehicle With Diverse Power Sources",2020.

©IJRASET: All Rights are Reserved

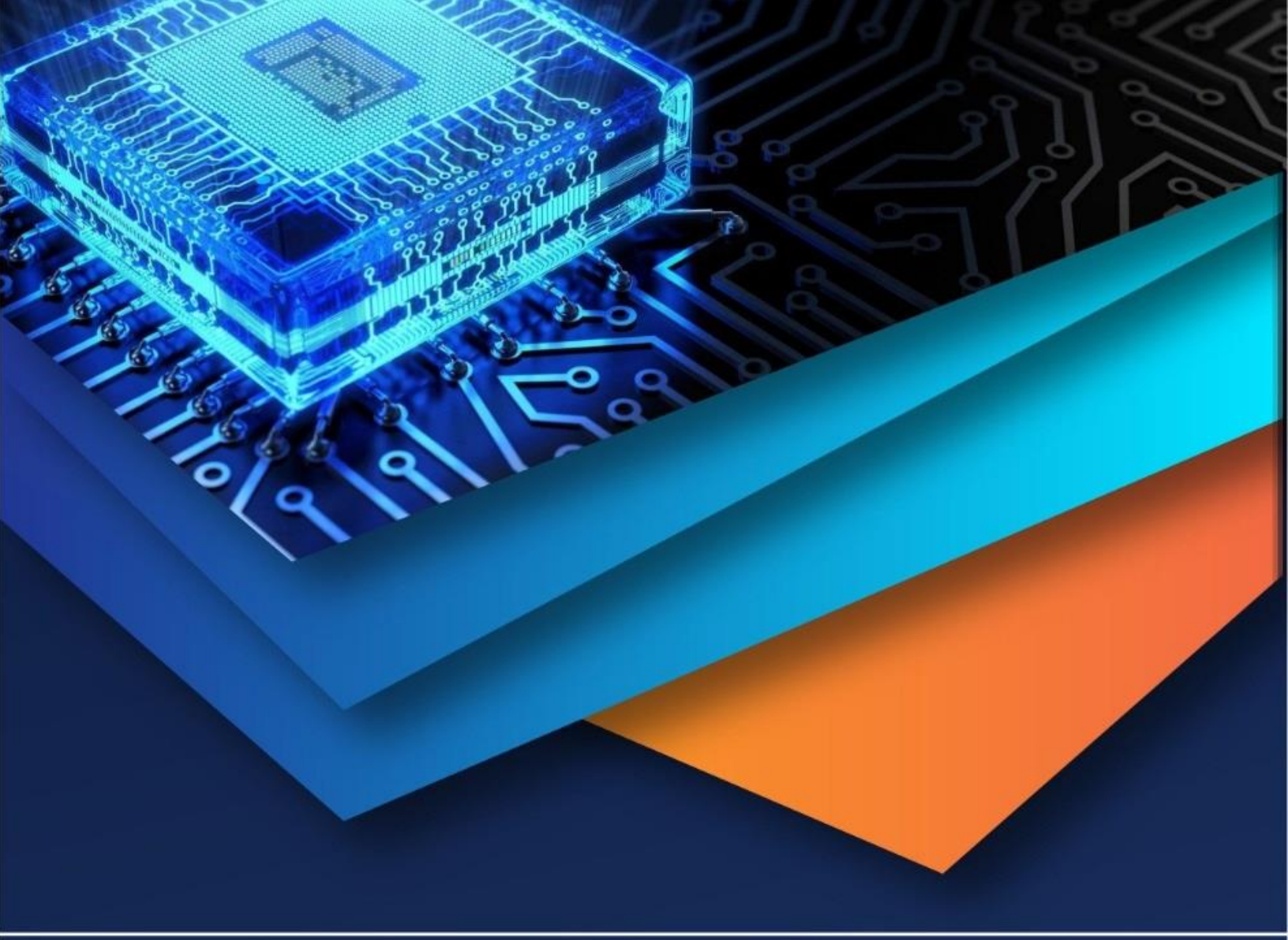

10.22214/IJRASET

45.98

IMPACT FACTOR: 7.129

IMPACT FACTOR: 7.429

INTERNATIONAL JOURNAL FOR RESEARCH

IN APPLIED SCIENCE & ENGINEERING TECHNOLOGY

Call : 08813907089 (24*7 Support on Whatsapp)