iJRASET
International Journal For Research in Applied Science and Engineering Technology



# INTERNATIONAL JOURNAL FOR RESEARCH

IN APPLIED SCIENCE & ENGINEERING TECHNOLOGY

**Volume:** 3 **Issue:** XI **Month of publication:** November 2015

**DOI:**

www.ijraset.com

Call: 08813907089 | E-mail ID: ijraset@gmail.com

International Journal for Research in Applied Science & Engineering Technology (IJRASET)

# Fault Diagnosis and Monitoring In Wind Turbine Using Can Bus

K.Swathi[1], S.Saranya[2], J.Dhivya Rubavathy[3]
[1]PG Scholars, Embedded system technologies, [2,3]Assistant professors, Dept. of EEE
Kongunadu College of Engineering &Technology, Trichy.

***Abstract--This paper is a CAN based architecture intended for the purpose of monitoring and fault diagnosis of wind turbine. CAN is a memo based protocol designed specifically for automotive, late aerospace, industrial automation and medical equipment's .CAN boundary module is use to communicate the monitor parameters among the wind turbine and the control Centre. During the message of the data beginning one nodule to another nodule trouble occurs. To avoid these conflicts we intend CAN protocol. In this project we assert the system with ARM and CAN protocol to monitor and diagnose the problems in the wind turbine application. The mission deal with the data communication among two units in the exact time without any disturbance. The data communication time is improved by the CAN protocol.ARM core1 run through CAN and LPC2148 as wind turbine unit to which sensors are associated and ARM core2 as defect diagnosis and monitoring section. A discussion about generation voltage (GV) exhibit is also added in this intend .Data acquisition node collects the sensor data during CAN protocol. The fundamental vision of this performance is to reduce the prospect of fault diagnosis and increase the monitoring of wind turbine.***

***Keywords—CAN bus, ARM processor, sensors, ZigBee wireless module, PC***

## I. INTRODUCTION

Wind is a form of the solar energy. Wind is caused by the uneven heating of the atmosphere by the sun, the irregularities of the earth surface and rotation of the earth. Wind turbines are a rotating mechanical device that converts wind energy into mechanical energy resulting in the production of the electricity. Wind turbines are fault prone, that is they are deployed in harsh environments such as the desert, plains apart from that they are complex electromechanical systems, so as to locate far away from the control center. The chance of fault occurrence and the side effects will be more, even it leads to control off. It is needed to expand the remote monitoring and fault diagnosis system to monitor the run time status and the diagnosis of fault to get better efficiency and the life time service of the wind turbine .Wind turbine major works such as nacelle, gear box and shaft and send it to control room via wireless ZigBee hence it helps to avoid such dangerous hazards. Depending on the collected data from the monitoring system analysed through and the fault diagnosis system makes the result of location and the type of fault to be occurs in the wind turbine. These are uploaded to display and this will help to reduce the fault occurrence through regular monitoring. The advantage of using CAN bus in the computerization is an added value to the system and increase its reliability. The purpose of using CAN bus is to facilitate any method to communicate with other system without putting too much load to the main controller.CAN bus is a high speed serial bus with speed 1 Mbps that is designed to provide an efficient ,reliable and economical linkage between various CAN systems, sensors and actuators. We use CAN communicate between the wind turbine and the control centre which adopt client/server frame works to execute the monitoring and fault diagnosis system.

## II. LITERATURE REVIEW

In this paper some approaches are to be performed to overcome these problems and some disadvantage. Fault diagnosis by varying the speed of DC motor and varying the speed level of industrial fans ,it can be seen through microcontroller and fuzzy logic program were able to give a necessary reaction for the pitch mechanism[1].Fault occurs in the turbine GSM module to be used to give the intimation message to server for safety purpose[2].By using this system automatically system is monitored and it avoids the automatic power off and it gives indication weather condition is changed using MAX485[3].Fault will be occurs GSM and GPRS can be connected to port to find fault and give SMS and voice calls by using ultrasonic sensor .Arduino core1 runs with CAN and atmega328 as wind turbine unit[4]. Existing stepper motor used to calculate the speed if the motor is not controlled well it can cause



©IJRASET 2015: All Rights are Reserved

Volume 3 Issue XI, November 2015
ISSN: 2321-9653
International Journal for Research in Applied Science & Engineering Technology (IJRASET)

resonance vibration. Hardly to run the higher speed [5]. Pic microcontroller has more complex architecture and their functionality is difficult to find the fault occurs in wind turbines [6].

## III. PROPOSED SYSTEM

The aim of this system of monitoring and fault diagnosis in wind turbine by using CAN bus module. There are two units are in this system one is the data acquisition unit it is used to sense and calculate the search parameters are speed, temperature, vibration, voltage level and another one is fault diagnosis unit this is used to find the fault occur in a wind turbine in the LCD display. Temperature based fan controller to be used in this processing unit such sensors are used in a wind turbine unit like MEMS,IR, temperature sensor . ZigBee is a wireless sensor communication used in a wind turbine to send information to control room and to receive information from control room. The display unit is placed is in the wind turbine section to explain the parameters details which act as the reference for operation in case of read-through the working condition ,are for any other fault occur parts in the turbine. In the fault diagnosis unit ZigBee receives the data from wind turbine and it is connected to PC using RS232. When fault occurs in the wind turbine according to the kind of fault the comment will be sent from PC to wind turbine to overcome the fault and to prevent blasting hazard.

## IV. BLOCK DIAGRAM

Figure1. Block diagram

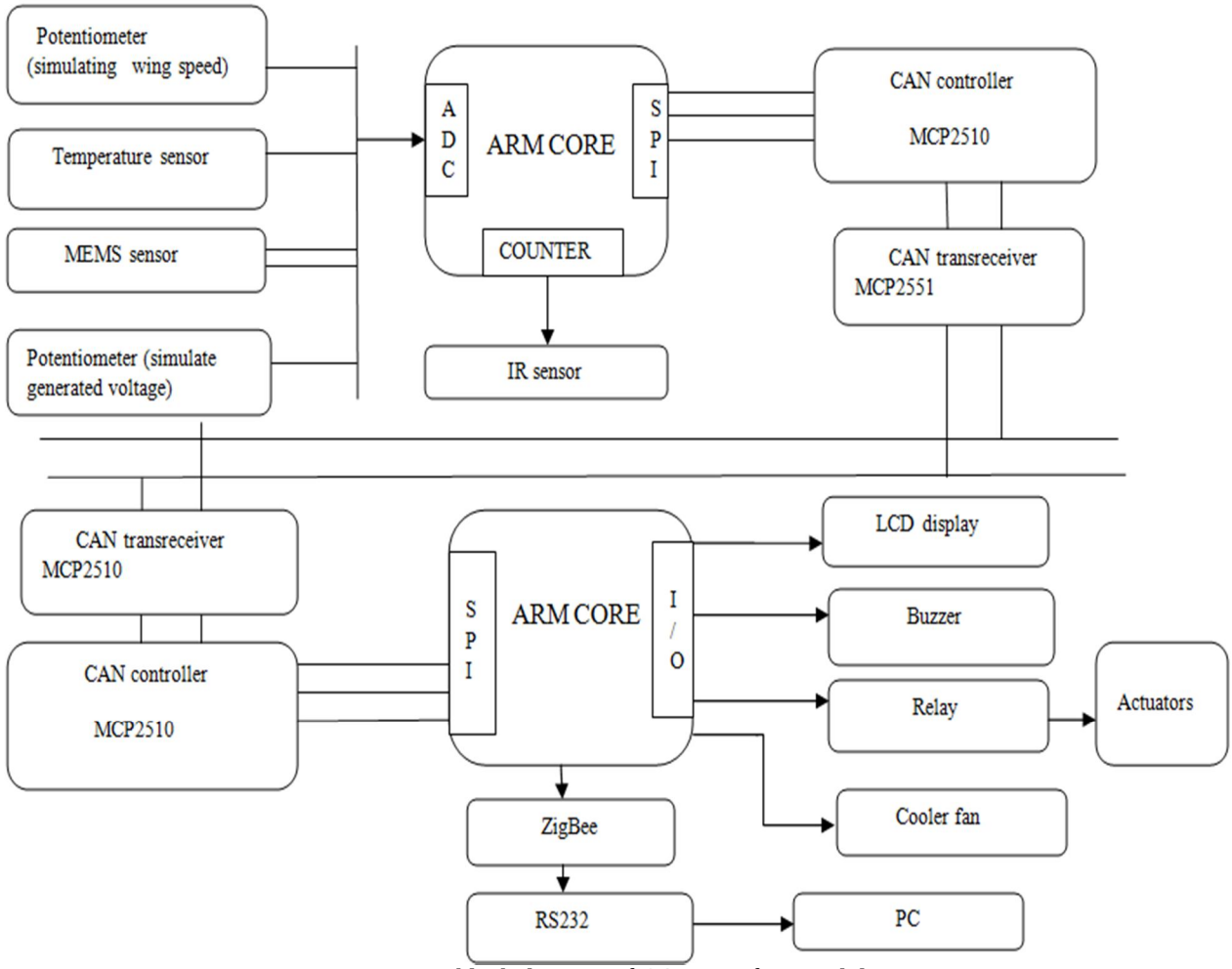


Fig.1 block diagram of CAN interface module



©IJRASET 2015: All Rights are Reserved

The overall block diagram of this system is explained below

ARM7 processor is low power, high speed, better accuracy and cost. Two ARMS processor is used one is for control centre and the other is for turbine, Temperature sensor senses the degree Celsius and if it exceeds the cooler fan will on automatically. MEMS accelerometer detects the vibration and the occurrence of natural calamities with the help of weather condition and it alters buzzer. To maintain the reliability of the system the rotation of the blade is calculated through the RPM/sec by the help of IR sensor and it regulate the speed of the system.

*A. Data Acquistion Unit*

A system consists of data acquisition unit it have a types of sensor like temperature sensors to sense level of temperature in wind turbine .MEMS sensor are used to detect vibration level of the turbine. Potentiometer are used to simulating the speed of dc motor in turbine section these are fed are to ARM processor. ADC is used to convert the analog to digital signal and rpm counter are used to find the speed level. Then these are send to the CAN transceiver.

*B. Processing Unit*

In the receiver side it receives and detect the fault occur in a wind turbine.speed, temperature level all to be displayed in the LCD and also cooler fan to be used to reduce the temperature level.Zigbee wireless sensor are to be used to communication through RS232 serial communication to send the information give the intimation to PC.

*C. DC Motor For Fault Recovery*

The Dc motors as the prime mover of the chemical injection pump. They are less costly to install and maintain .Dc motors are used in applications that require continuous duty, changeable speed and high torque response to maintain a constant speed even the pressure varies. The turbine, gearbox and alternator have to be provided continuous lubrication.

## V. FAULT DETECTION IN WIND TURBINE

The Fault is defined as the termination of the capability of an object to complete a function. When the fault occurs inside the wind turbine like the temperature in the gear box. Sometimes in order to avoid safety hazards or main system breakdowns, the turbine has to be shutdown. Finally whenever a major failure has happened, a report is known. Wind turbine rotors are level to acquire creep and corrosion fatigue, which can be observed as cracks and delimitations in the blades, mostly the faults in generators can be detected by current measurement.

## VI. SOFTWARE REQUIREMENTS

Software and language used for programming the ARM microprocessor are shown below.

*A. KEIL IDE*

We use KEIL u vision 3 software for programming the LPC2148 microprocessor. The software solves the complex problems facing embedded software developers. While starting a new project, first we have to select the microprocessor, that we are going to use for our project from the device database and the u vision IDE sets all.

*B. Flash Magic*

Flash magic is a PC tool for programming Flash based microcontrollers/ microprocessors from NXP using a serial or Ethernet Protocol while in target is to download the hardware. The use of flash magic is to download the .hex file to the ARM processor.

*C. Proteus*

Proteus Design suite (also known as proteus VSM or Proteus [version number]) is a powerful electronic design application available from Lab centre Electronics. It offers a range of design including: schematic capture Mixed mode(analogue and digital circuit ) electronic circuit simulation, Microprocessor/microcontroller simulation PCB design with manual and autrouter options Graph – based simulation.Proteus 8 is one of the most tools for circuit designing and simulation which includes:

Application Framework – Single integrated application with ISIS, ARES and 3 D viewer appearing s tabbed modules. Switch



©IJRASET 2015: All Rights are Reserved

Volume 3 Issue XI, November 2015
ISSN: 2321-9653
International Journal for Research in Applied Science & Engineering Technology (IJRASET)

between tabs on a single monitor (eg, Laptop) or drag and drop tabs to view in separate windows.

## VII. RESULT

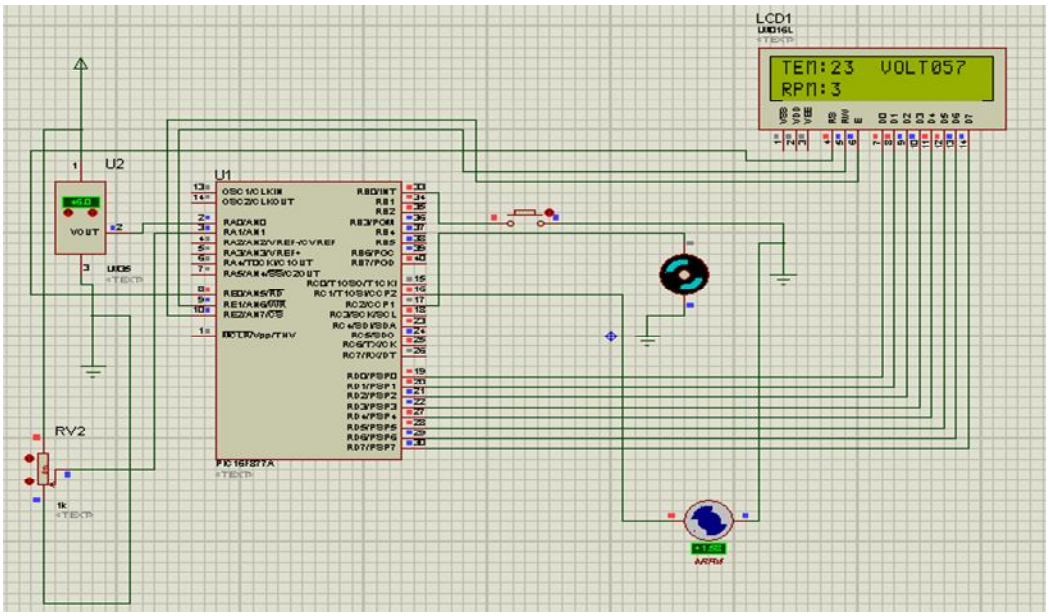


## VIII. CONCLUSION

The fault identification is used ARM and the parameters are measured through CAN interface module. The CAN protocol, which is used for serial communication provides high data transmission rate and reliability.ARM gives the output of parameter measurement such as rpm, vibration and temperature. Nature of electromechanical system is the causes of fault to be occurred in the wind turbine. It is very important to perform the monitoring and fault diagnosis of wind turbine parameters. Thus the ZigBee wireless communication enables the remote controlling system of all parameters from the control room through PC.This is simple ,convenient ,time saving and safety for wind turbine.

## REFERENCES

[1] Mohanraj.M, Dr. Rani Thottungae, jaikumar.k, “A CAN Bus based system for monitoring and fault diagnosis in Wind Turbine”, IEEE transactions,2013.
[2] Wang chuhang Network Centre of Chanchun Normal University, “Remote Monitoring and Diagnosis System for Wind Turbine” IEEE transactions On Energy Conversion, vol. 12, no. 3, pp. 223-229, march 2007.
[3] Wenyi Liu, Baoping Tang, Yonghua Jiang, “status and problems of wind turbine structural health monitoring techniques” in china, 1ST National conference 2009, vol. 35, No. 7, pp. l4l4-l4l8, July 20l0.
[4] Ribrant and L.B ertling, Survey of failures in Wind power systems with focus on Swedish wind power plants during 1997 - 2005, IEEE transactions on Energy conversion, vol. 22, no, 1, pp. 167-173, March 2007.
[5] I.Nilsson and L.B ertling, Maintenance management of windpower systems using condition monitoring systems life cycle cost analysis for two case studies, IEEE transactions On Energy Conversion, vol. 22, no. 1, pp. 223-229, march 2007
[6] Fang Li, Lifang Wang, Chenglin Liao, CAN (Controller Area Network) B us Communication system Based onMatlab/Simulink. Available: http://www.ieeexplore.ieee.org.
[7] Van. R and Geo .R.X, 2010, "Harmonic Wavelet-Based Data Filtering for Enhanced Machine Defect Identification.
[8] YLu, J Tang, April 2012, Wind Turbine Gearbox Fault Detection using Multiple Sensors with Features Level Data Fusion.
[9] Analytical techniques for performance monitoring of modern wind turbines, 2012EWEA Copenhage.
[10] sL.SenthilMurugan,K.S.AswathRangaraj, D.Mathesh,”Design of Monitoring System and Fault Diagnosis in Wind Turbine Based On Can Bus Using ARM”, International Journal of Innovative Research in Science, Engineering and Technology, Volume 3, Special Issue 2, April 2014.


©IJRASET 2015: All Rights are Reserved

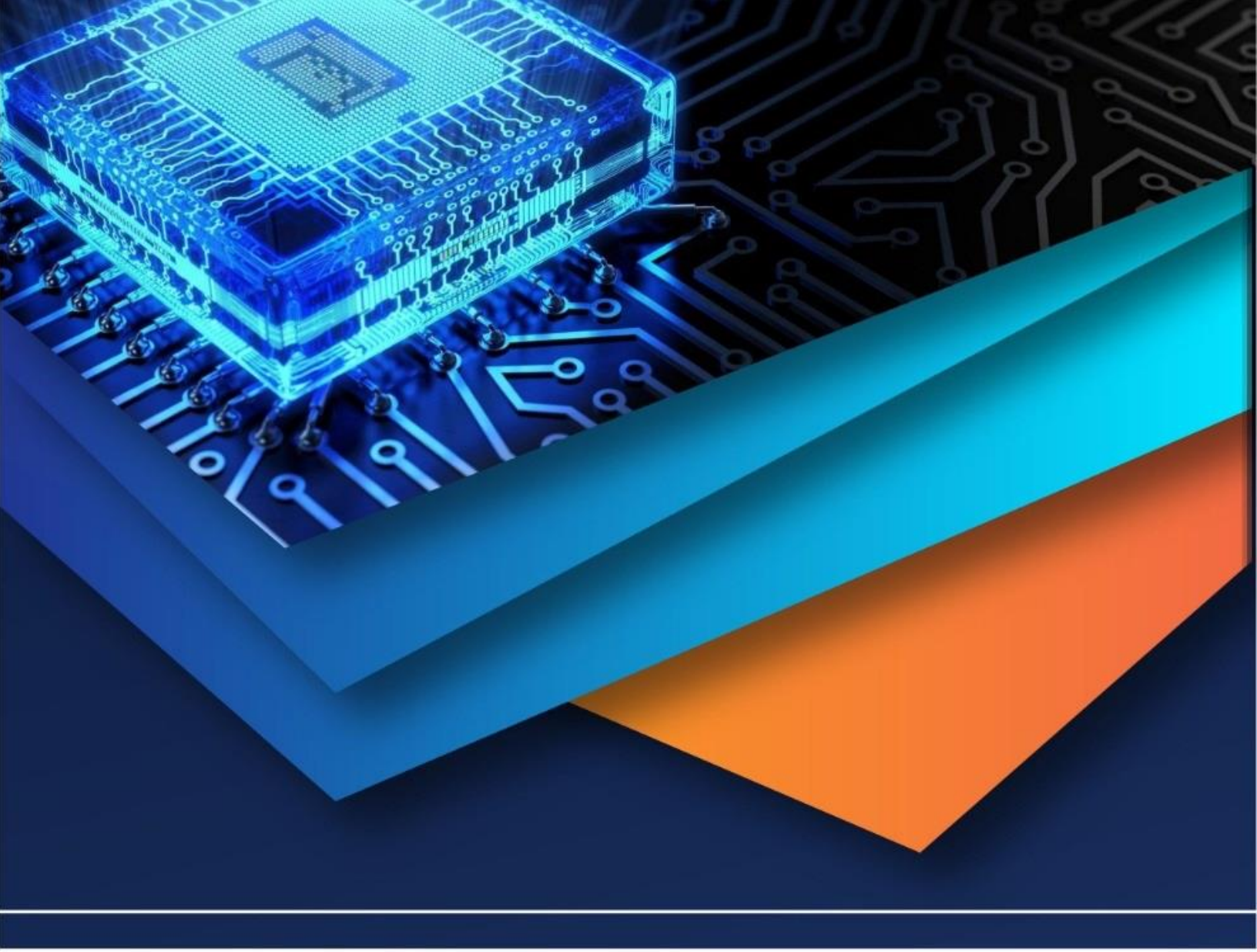

10.22214/IJRASET

45.98

IMPACT FACTOR: 7.129

IMPACT FACTOR: 7.429

# INTERNATIONAL JOURNAL FOR RESEARCH

IN APPLIED SCIENCE & ENGINEERING TECHNOLOGY

Call : 08813907089 (24*7 Support on Whatsapp)