iJRASET
International Journal For Research in Applied Science and Engineering Technology



INTERNATIONAL JOURNAL FOR RESEARCH

IN APPLIED SCIENCE & ENGINEERING TECHNOLOGY

Volume: 3 **Issue:** XI **Month of publication:** November 2015

DOI:

www.ijraset.com

Call: 08813907089 | E-mail ID: ijraset@gmail.com

International Journal for Research in Applied Science & Engineering Technology (IJRASET)

Power Systems Load-Frequency Stability Using Fuzzy Logic-PI Controller

Richa Kaushal[1], Devendra Dohre[2]
Maharana Pratap College of Technology (MPCT) ,gwalior,madhya pradesh,india

Abstract-This paper presents the use of artificial intelligence (Fuzzy Logic Controller) to study the load frequency control of power system. The proposed fuzzy logic load frequency controller has been designed to improve the dynamic performance of the frequency of power flow under a sudden load change in the power areas. Then Fuzzy Logic Controller (FLC) changes, such as what is observed in using the system. The system has different control area power system small signal model in Matlab / Simulink computer simulation program was created. FLC control has been using the system. This produces results is better than other controller.

Index Terms: Fuzzy Logic Controller (FLC), PIC Controller, Load frequency control of power system, single area, FLC-PI Tuning controller.

I. INTRODUCTION

In recent years electricity has been used to power more sophisticated and technically complex manufacturing processes, and a variety of high-technology consumer goods. These products and process are sensitive not only to the continuity of power supply but also on the quality of power supply such as voltage and frequency. In power system, both active and reactive power demands are never steady they continuously change with the rising or falling trend. The changes in real power affect the system frequency, while reactive power is less sensitive to changes in frequency and is mainly dependent on Changes in voltage magnitude [1]. Load Frequency Control (LFC) as a major function of Automatic Generation Control (AGC) is one of the important control problems in electric power system design and operation. It is becoming more significant today because of the increasing size, changing structure, emerging new uncertainties, environmental constraints and the complexity of power systems. A large frequency deviation can damage equipment, corrupt load performance, reason of the overloading of the transmission lines and can interfere with system protection schemes, ultimately leading to an unstable condition for the electric power system [2]. Although the active power and reactive power have combined effects on the frequency and voltage, the control problem of the frequency and voltage can be decoupled. The frequency is highly dependent on the active power while the voltage is highly dependent on the reactive power. Thus the control issue in power systems can be decoupled into two independent problems. One is about the active power and frequency control while the other is about the reactive power and voltage control [3].Many investigations in the area of LFC of an isolated power system have been reported and a number of control schemes like integral (I), Proportional and Integral (PI), Proportional, Integral and Derivative (PID) control have been proposed to achieve improved performance [4-7].Fuzzy -PI controllers have been proposed to solve Load Frequency Control problems, and developed different fuzzy rules for the proportional and integral gains separately. in this paper three case studies of Fuzzy -PI controllers different tuning of PI controller. The comparison results suggest that the overshoots and settling time with the proposed Fuzzy -PI controllers' controller was better.

II. LOAD FREQUENCY CONTROL OF POWER SYSTEMS

More than one control area power systems with a single control zone is actually a combination of power systems and The problems of each region, combining a control structure. Figure 1 is a single zone with a power system block diagrams [8]. Here, the system, a regulator regulating the speed of synchronous generator, synchronous generator and the load is composed. Fig 1 is examined,

©IJRASET 2015: All Rights are Reserved

Volume 3 Issue XI, November 2015
ISSN: 2321-9653
International Journal for Research in Applied Science & Engineering Technology (IJRASET)

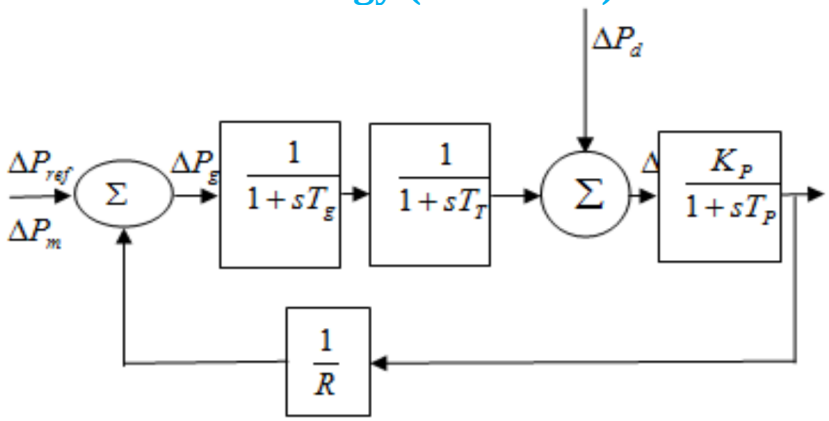

Fig 1 Load frequency control block diagram of an isolated power system

ΔPref reference strength, the exchange of angular velocity ΔΩ, ΔPL load variation, the time constant of speed regulator τg, τT inlet valve time constant, inertia constant in seconds H, D damping factor, and R represents the coefficient of speed regulation. Continuous operation of the system in equilibrium conditions in Fig 1. Changes in the system parameters are zero. Exchange system by disturbing the balance of power in the load ΔPL leads to changes in speed and power produced. Changes in the new equilibrium point will still remain zero. Therefore, given the reference power ΔPref essentially zero change. Single-zone power system closed-loop transfer function equation (1) can be given as at. A power system load usually consists of two parts. One of them is active in lighting and power needed for heating devices and the other equipment needed by the engine, such as reactive power. Subscribers connected to the power system depending on the constant change in demands for active and reactive power system frequency varies continuously. This change in consumer power has the power network effects, and also changes in the power transfer between different control areas [9-10].

III. FUZZY LOGIC CONTROLLER

Fuzzy logic is another form of artificial intelligence. Fuzzy logic has been recently applied in process control, modeling, estimation, identification, diagnostics, stock market, prediction, agriculture, military science and so on. Fuzzy logic, unlike Boolean or crispy logic, deals with problems that have vagueness, uncertainty, imprecision or qualitative ness [11]. One of the reasons for the popularity of Fuzzy Logic Controllers is its logical resemblance to a human operator. It operates on the foundations of a knowledge base which in turn rely upon the various if then rules, similar to a human operator [12]. Unlike other control strategies, this is simpler as there is no complex mathematical knowledge required. The FLC requires only a qualitative knowledge of the system thereby making the controller not only easy to use, but also easy to design.

A. Components of Fuzzy Logic Controller

The inputs to a Fuzzy Logic Controller are the processed with the help of linguistic variables which in turn are defined with the aid of membership functions. The membership functions are chosen in such a manner that they cover the whole of the universe of discourse. To avoid any discontinuity with respect to minor changes in the inputs, the adjacent fuzzy sets must overlap each other [13]. Because of a small time constant in Fuzzy Logic Controllers, this criterion is very important in the design of the same. There are basically three essential segments in Fuzzy Logic Controller viz.

Fuzzification block or Fuzzifier.

Inference System.

Defuzzification block or Defuzzufier.

©IJRASET 2015: All Rights are Reserved

Volume 3 Issue XI, November 2015
ISSN: 2321-9653
International Journal for Research in Applied Science & Engineering Technology (IJRASET)

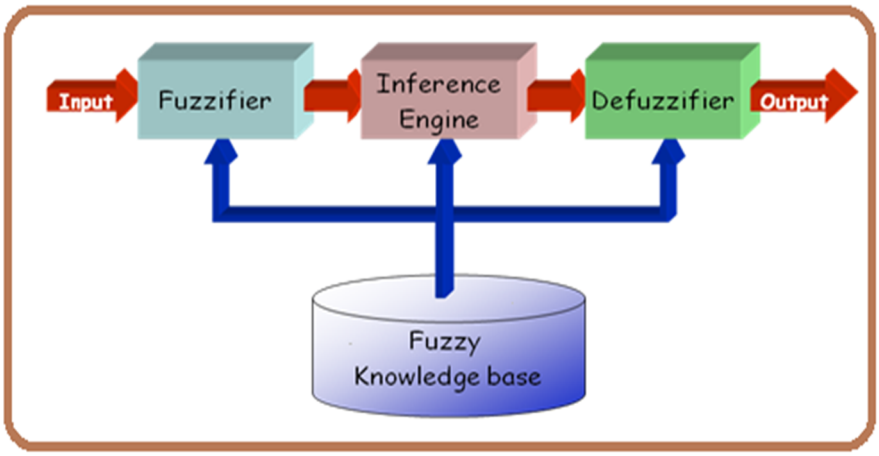

Fig 2 Basic structure of fuzzy logic system

This paper presents a methodology for rule base fuzzy logic PI controller applied to a system. Before running the simulation in MATLAB/SIMULINK, the Fuzzy Logic Controller is to be designed. The design of a Fuzzy Logic Controller requires the choice of Membership Functions. After the appropriate membership functions are chosen, a rule base is created. The various linguistic variables to design rule base for output of the fuzzy logic controller are enlisted in Table 1, This work proposes a fuzzy controller with up to 25 rules with 5 membership function as negative high (NH) , negative medium (NM) , zero (ZE) positive small (PS) , positive high (PH) For the control of Area control error (ACE) , there are two controllers , ACE and d/dt (ACE).

Table 1 Fuzzy Inference Rule for Fuzzy Logic Controller

Variable	NH	NM	ZE	PS	PH
NH	NH	NH	NH	NM	ZE
NM	NH	NH	NM	ZE	PH
ZE	NH	PM	ZE	PM	PM
PM	NM	ZE	PM	PH	PH
PH	ZE	PM	PH	PH	PH

Fuzzy controller is created and the membership functions and fuzzy rules are determined. The numbers of rules are 25. The membership functions (MFs) for the input variables are shown in Fig.4.

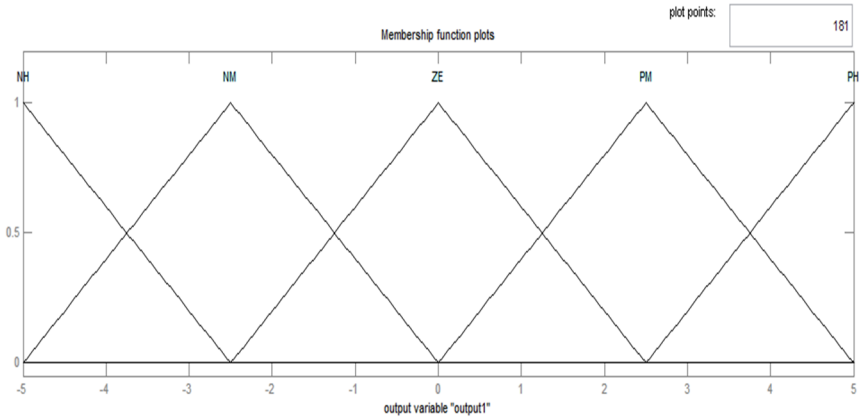

Fig 3 Membership Function for the control input variables

IV. MATLAB SIMULINK RESULTS AND DISCUSSIONS

In this paper Power system Model using fuzzy Logic controller with in PI controller, The MATLAB Simulink diagram is shown in

©IJRASET 2015: All Rights are Reserved

Volume 3 Issue XI, November 2015
ISSN: 2321-9653
International Journal for Research in Applied Science & Engineering Technology (IJRASET)

Figure 6.Parameter of load frequency control show in the appendix section [15].

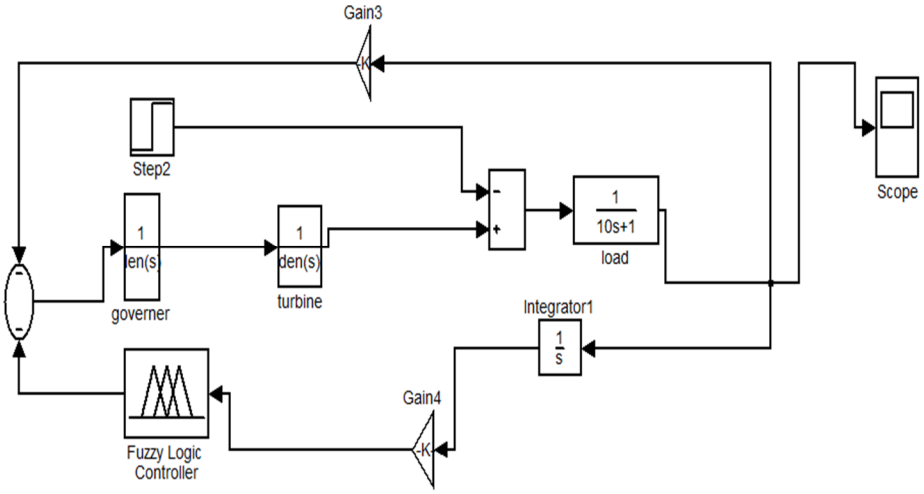

Fig 4 load frequency control MATLAB Simulink model of FLC-PI

The output response of FLC-PI tuning method for power system is shown in Fig.5, Fig. 6, and best result show in the Fig.7.

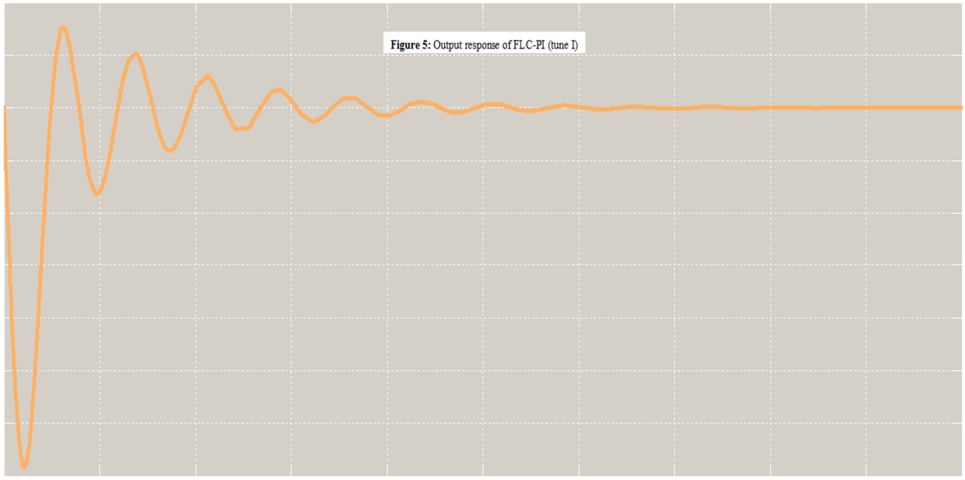

Figure 5: Output response of FLC-PI (tune I)

Figure 6: Output response of FLC-PI (tune II)

©IJRASET 2015: All Rights are Reserved

Volume 3 Issue XI, November 2015
ISSN: 2321-9653
International Journal for Research in Applied Science & Engineering Technology (IJRASET)

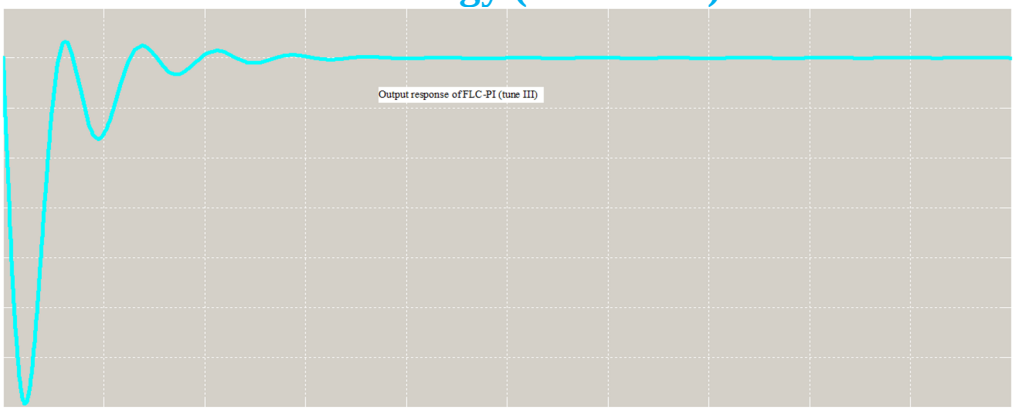

Figure 7: Output response of FLC-PI (tune III)

For better dynamic responses tune I, tune II and tune III using fuzzy logic controller method, we reduce settling time, oscillation. The response of power system also varies according to rated power capacity of any system.

V. CONCLUSION

In this paper, fuzzy logic –PI controller has been presented and analysis of Fuzzy-PI three different tune results. Simulation was carried out using MATLAB version 2012a to get the output response of the system. The amount of overshoot for the output response was successfully decreased using the fuzzy logic–PI controller. Simulation results show fuzzy logic –PI controller provides suitable dynamic frequency response.

APPENDIX

Table 2 parameters of single area power system load frequency control

Parameter name	Single are value
Tg	0.2
T_t	0.5
T_p	10
R	20

REFERENCES

[1] R Shyama, R Satheesh Kumar, V Shanmugasundaram "Design of FGSPI Controller Based Combined LFC and AVR of Two Area Interconnected Power Generating System" International Journal of Engineering and Advanced Technology (IJEAT) ISSN: 2249 – 8958, Volume-1, Issue-4, April 2012.
[2] M. A. Tammam1, M. A. S. Aboelela2, "Fuzzy Like Pid Controller Tuning By Multiobjective Genetic Algorithm For Load Frequency Control In Nonlinear Electric Power Systems" International Journal of Advances in Engineering & Technology, Nov. 2012.
[3] V. Ganesh1, K.Vasu2 and P.Bhavana3, "LQR Based Load Frequency Controller for Two Area Power System" International Journal of Advanced Research in Electrical, Electronics and Instrumentation Engineering Vol. 1, Issue 4, October 2012.
[4] Mohinder Pal 1, Palvee 2, Kamaljeet Kaur 3, "To Control Load Frequency by using Integral Controller" International Journal of Innovative Research in Science, Engineering and Technology,Vol. 3, Issue 5, May 2014.
[5] Surya Prakash 1*, S.K. Sinha 2, "Load frequency control of three area interconnected hydro-thermal reheat power system using artificial intelligence and PI controllers" International Journal of Engineering, Science and Technology Vol. 4, No. 1, 2011, pp. 23-37.
[6] J .Syamala, I.E.S. Naidu , "Load Frequency Control of Multi-Area Power Systems Using PI, PID, and Fuzzy Logic Controlling Techniques" International Journal of Innovative Research in Science, Engineering and Technology, Volume 3, Special Issue 1, February 2014.
[7] Lusika Roy 1 , Bikash Dey 2, "Load Frequency Control in Interconnected Power System by Using Classical Controller" International Journal of Electronics and Computer Science Engineering, ISSN 2277-1956/V3N1-22-25.
[8] Hilmi Zenk, Osman Zenk, "Two Different Power Control System Load- Frequency Analysis Using Fuzzy Logic Controller"2011 IEEE.
[9] Saumya Kr. Gautam, Nakul Goyal, "Improved Particle Swarm Optimization Based Load Frequency Control in a Single Area Power System" 978-1-4244-9074-5/10/$26.00 ©2010 IEEE 2010 Annual IEEE India Conference (INDICON)
[10] G. Panda, S. Panda, and C. Ardil, " Automatic Generation Control of Interconnected Power System with Generation Rate Constraints by Hybrid Neuro Fuzzy

©IJRASET 2015: All Rights are Reserved

Approach", Int. J. of Electrical Power and Energy Systems Engineering, vol. 2, no. 1, 2009,

[11] Anbarasi S#1, Mur alidharan S*2, "Transient Stability Improvement Of LFC And AVR Using Bacteria Foraging Optimization Algorithm" 2014 IEEE International Conference on Innovations in Engineering and Technology (ICIET'14), Volume 3, Special Issue 3, March 2014.

[12] Saumya Kr. Gautam, Nakul Goyal, "Improved Particle Swarm Optimization Based Load Frequency Control In A Single Area Power System" 2010 Annual IEEE India Conference (INDICON).

[13] Nur Azliza Ali, "Fuzzy logic controller for controlling DC motor speedusing MATLAB applications**".**

[14] K. Vijaya Kumar1, V. Lakshma Naik2, "A Novel Method to Improve the LFC in Single Area and Two Areas Power System Using PI Controller" International Journal of Science and Research (IJSR), Volume 3 Issue 11, November 2014.

.

©IJRASET 2015: All Rights are Reserved

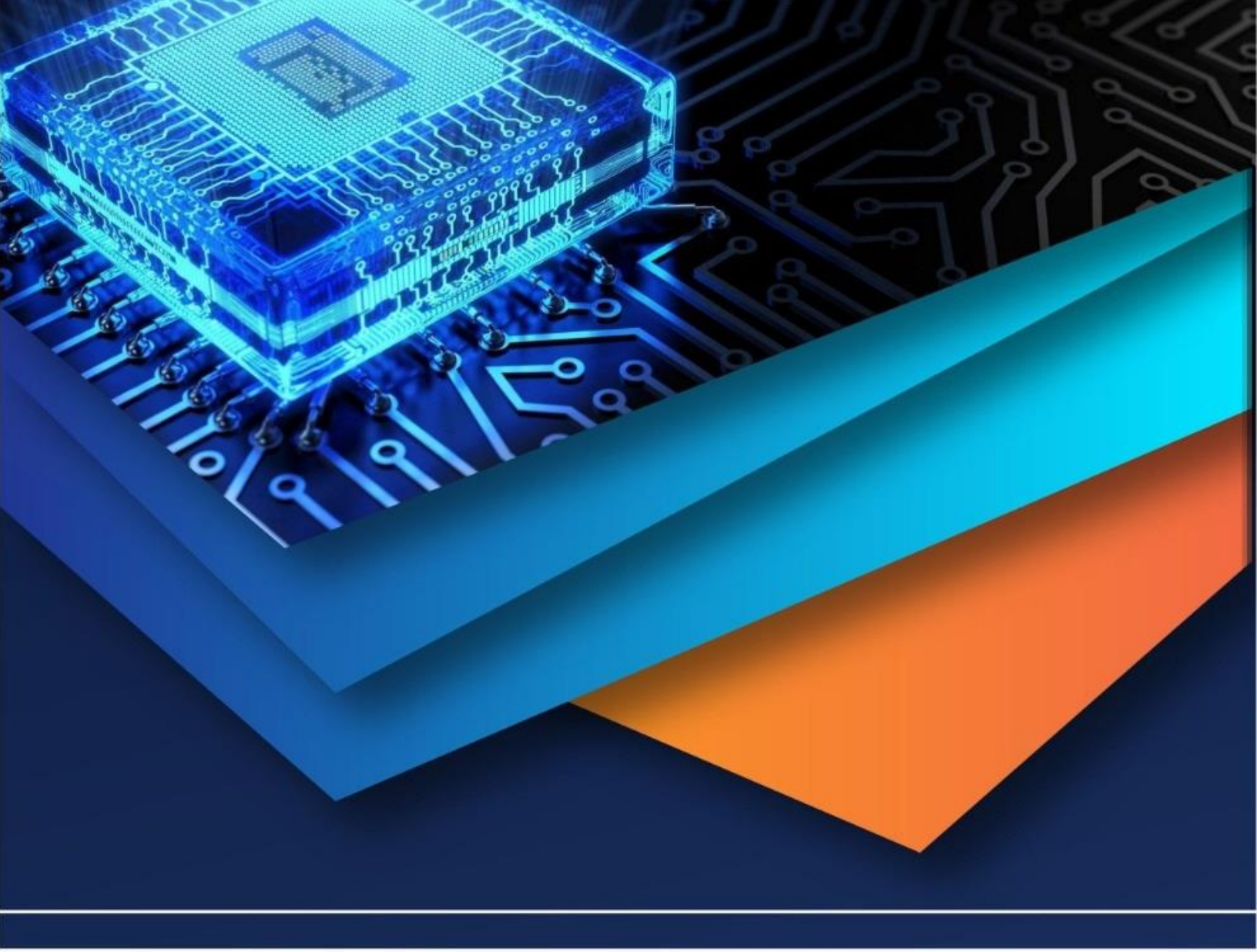

10.22214/IJRASET

45.98

IMPACT FACTOR: 7.129

IMPACT FACTOR: 7.429

INTERNATIONAL JOURNAL FOR RESEARCH

IN APPLIED SCIENCE & ENGINEERING TECHNOLOGY

Call : 08813907089 (24*7 Support on Whatsapp)