iJRASET
International Journal For Research in Applied Science and Engineering Technology



INTERNATIONAL JOURNAL FOR RESEARCH

IN APPLIED SCIENCE & ENGINEERING TECHNOLOGY

Volume: 3 **Issue:** XI **Month of publication:** November 2015

DOI:

www.ijraset.com

Call: 08813907089 | E-mail ID: ijraset@gmail.com

Volume 3 Issue XI, November 2015
ISSN: 2321-9653
International Journal for Research in Applied Science & Engineering Technology (IJRASET)

Design of an Underdamped Vibration System under the Impact of Magnetic Forces to generate Power

Faizan Ansari[1], Nashith Khalifa[2]
[1,2]*Mechanical Engineering, M.H.Saboo Siddik College of Engineering, Mumbai, India*

Abstract -This paper presents a new concept on harnessing electrical energy using mechanical vibrations. The system consists of three magnets, with two being fixed and the third remaining in oscillatory motion under the influence of spring and magnetic forces of the two fixed magnets. The whole system is analogous to an Internal Combustion (IC) engine. The oscillating magnet acting as a piston is connected to a crankshaft through a connecting rod to produce rotational motion which when coupled to a generator will produce electricity. A flywheel connected to the crankshaft stores system energy. Magnetic forces of attraction between the moving and the stationary magnets are calculated to determine the position of the magnets and the restoring force developed in the springs. The Equation of Motion of system is derived to show the continuous motion of the system at any point of time under ideal conditions.
Keywords- Magnetism, Vibration, Power Generation, spring mass system, Underdamped system

I. INTRODUCTION

The dwindling fossil fuels and the growing demand for electricity have evoked scientists and engineers to work on areas of other non-conventional methods for producing electricity. One such effort presented in this paper is design of an underdamped vibration system under the influence of magnetic forces to generate electricity. This system though has a great potential to generate electricity, but still has scope for development. The system uses magnetic and spring forces to maintain the amplitude of oscillation and develop power through the connected mechanisms.

II. OBJECTIVE

The objective is to achieve a continuous periodic motion of magnet ‘A’ at a speed of 300 rpm with constant amplitude.

III. CONSTRUCTION

The system consists of a permanent magnet ‘A’ which is suspended inside a sleeve by two springs. This magnet moves in oscillatory motion inside the sleeve. The springs and the connecting rods are linked to the magnet ‘A’ through a coupling. A crankshaft is linked to magnet ’A’ via connecting rod. The permanent magnets ‘B’ and ‘C’ placed at the top & bottom of the assembly, assists in maintaining a constant amplitude and overcome back EMF of magnet ‘A’. The construction details of the system are shown below in figure- 1 respectively.

©IJRASET 2015: All Rights are Reserved

Volume 3 Issue XI, November 2015
ISSN: 2321-9653
International Journal for Research in Applied Science & Engineering Technology (IJRASET)

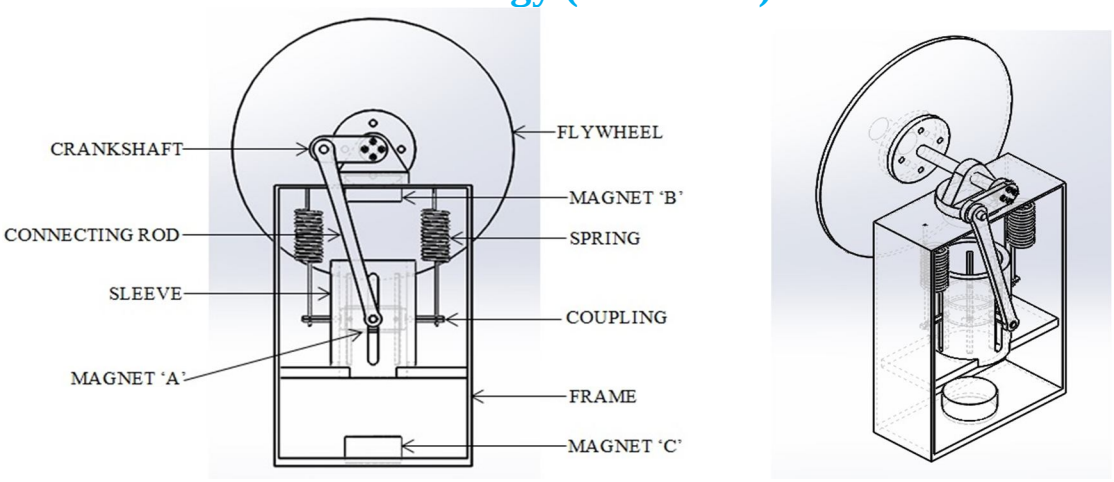

Fig. 1 Front & Isometric view of the system

IV. THEORY FOR PRODUCTION OF ELECTRICITY USING MAGNETIC ENERGY

Initially magnet 'A' is set in simple harmonic motion using mechanical energy i.e. through a capacitor start motor. Under natural oscillation, amplitude of magnet 'A' would start to reduce, but the magnets 'B' and 'C' assist magnet 'A' in maintaining a constant amplitude in SHM by attracting it towards them when it is in motion. The restoring force of the spring brings magnet 'A' back to its mean position. This process repeats and magnet 'A' oscillates continuously in SHM, setting the crankshaft in rotational motion which when coupled to a generator produces electricity.

V. METHODOLOGY

Magnet Selection.
Calculations of magnetic forces between 2 bar magnets at various distances from each other.
Calculation of Natural Frequency of the system & Restoring Force in the springs.
Determination of the position of magnets 'B' & 'C' respectively.
Validation of the objective
Spring Design
Flywheel Design

A. Magnet Selection

TABLE 1
SPECIFICATIONS OF MAGNET

Properties	Details/Values
Type	Ferrite
Shape	Cylindrical
Diameter in mm	40
Height in mm	20
Magnetization	435
Strength in kg	4.7
Weight in grams	200
Magnetic Flux Density (Bo) in Tesla	0.4
Coercive Field Strength(Hc) in kA/m	180

Based on the magnet selected, the specifications of the coupling and sleeve are obtained as follows:

©IJRASET 2015: All Rights are Reserved

Volume 3 Issue XI, November 2015
ISSN: 2321-9653
International Journal for Research in Applied Science & Engineering Technology (IJRASET)

TABLE 2
SPECIFICATIONS OF SLEEVE & COUPLING

Properties	Details/Values
Sleeve	
Material	Nylon
Inner diameter in mm	48
Thickness in mm	6
Height in mm	90
Coupling	
Material	Nylon
Inner diameter in mm	40
Outer diameter in mm	48

B. Calculation Of Magnetic Force Of Attraction Between Two Identical Cylindrical Bar Magnets

TABLE 3
SPECIFICATIONS OF THE MAGNET

Properties	Value
Magnetic flux density very close to each pole, B_0	0.4 Tesla
Radius of each magnet, R	20 mm
Area of each pole, A	1.2566 1.2566×10^{-3} m^2
Length of each magnet, L	20 mm
Permeability of space, μ_0	4×10^{-7} Tm/A

$$F = \left[\frac{B_0^2 A^2 (L^2+R^2)}{\pi \mu_0 L^2}\right]\left[\frac{1}{x^2} + \frac{1}{(x+2L)^2} - \frac{2}{(x+L)^2}\right] \quad \ldots\ldots. (1)$$

Using the above equation, [1] the force of attraction between the two magnets 'A' & 'B/C' of equal strength is calculated for different values of 'S' i.e. gap or separation between the two magnets which is presented below in table - 4.

TABLE 4
FORCES OF ATTRACTION BETWEEN 2 MAGNETS SEPARATED BY DISTANCE 'S'

S (mm)	F (N)
5	4773.609
10	1046.755
15	402.22
20	195.55
25	108.676
30	65.94
35	42.617
40	28.88
45	20.33
50	14.75
55	10.985
60	8.355
65	6.473

©IJRASET 2015: All Rights are Reserved

Volume 3 Issue XI, November 2015
ISSN: 2321-9653
International Journal for Research in Applied Science & Engineering Technology (IJRASET)

70	5.096
75	4.068
80	3.288
85	2.688
90	2.219
95	1.84
100	1.55

Table - 4 shows that the force of attraction between the magnets decreases with increase in gap or separation distance between the magnets. These values along with the restoring force in the springs are used to determine the exact position of magnets 'B' and 'C' at each end. The above table is used to determine an approximate value of the forces on magnet 'A' due to 'B' & 'C' respectively which in turn is used as an input to calculate system natural frequency and the springs restoring force.

C. Calculation Of Natural Frequency Of The System & Restoring Force In The Springs

Assumptions: ……. (i)

Generated output shaft speed (N) = 300 rpm. Therefore, Angular velocity, $\omega = 10\pi$ rad/sec and Time period, $T = 0.2$ sec i.e. frequency (f) = 5Hz

By study, it is found that spring damper system with very little damping yields best results. For minimal damping, the damping ratio (ξ) of 0.05 is assumed.

Amplitude (X) of vibration = 35 mm.

$$\text{Amplitude, } X = \frac{F/M}{\sqrt{(\omega_n{}^2-\omega^2)^2+(2\xi\omega_n\omega)^2}} \qquad \ldots\ldots\ldots (2)$$

$$\text{Spring constant, } k = \frac{M\,\omega_n{}^2}{2} \qquad \ldots\ldots\ldots (3)$$

$$\text{Restoring force, } F_R = -2kX \qquad \ldots\ldots\ldots (4)$$

Restoring force in the springs is calculated using the value of natural frequency [2] of the system that depends variably on force applied (F) on the moving magnet 'A' by 'B' or 'C' which in turn depends on separation distance between the magnets. The process of finding the position of magnets 'B' & 'C' involves trial and error to ascertain the value of force of attraction between magnet 'A' & 'B/C' slightly greater than the restoring force in the springs.

Using the equations (2), (3), & (4), the restoring force (F_R) is obtained for different values of 'F' which is tabulated below in table-5.

TABLE 5
RESTORING FORCE IN THE SPRINGS FOR VARIOUS VALUES OF 'S'

S (in mm)	F (in N)	F_R (N)
30	65.94	59.03
35	42.91	36
40	28.88	21.97
45	20.33	13.422
50	14.75	7.84
55	10.98	4.077
60	8.35	1.447

From Table-6, it is seen that at S = 30 mm (for which F = 65.94 N), the restoring force in the springs i.e. F_R = 59.03 N is approximately 90% of F. Hence, F = 65.94 N which is slightly greater than the corresponding restoring force, is used to create a pull on the magnet 'A', which assists in maintaining its amplitude.

From (i) & eqn. (2);

$$\text{Natural frequency, } \omega_n = 91.83 \text{ rad/sec} \qquad \ldots\ldots\ldots (I)$$

©IJRASET 2015: All Rights are Reserved

Volume 3 Issue XI, November 2015
ISSN: 2321-9653
International Journal for Research in Applied Science & Engineering Technology (IJRASET)

D. Determination Of The Position Of Magnets 'B' & 'C'

Using free body diagram [3], the external forces acting on magnet 'A', static at either ends of the sleeve, are calculated to validate the selected force F= 65.94N which is used further to establish the positions of magnets 'B' & 'C' respectively.

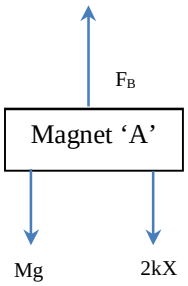

Fig. 3 Force on magnet 'A' due to magnet 'B'

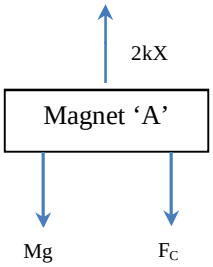

Fig.4 Force on magnet 'A' due to magnet 'C'

From figure (3),

$$F_B = Mg + 2kX$$

From figure (4),

$$F_C = 2kX - Mg$$

Where,
M = Mass of magnet 'A' i.e. 200 gm (including the weight of the coupling)
F_B = Force between magnets 'A' & 'B' at the upper end of the sleeve
F_C = Force between magnets 'A' & 'C' at the lower end of the sleeve

From (i) and eqn. (3);

$$k = 843.275 \text{ N/m} \qquad \ldots\ldots\ldots \text{(II)}$$

Therefore, from table- 1, (i) & (II)

$$F_B = 60.991 \text{ N}$$
$$F_C = 57.067 \text{ N}$$

The magnitude of forces F_B & F_C are at equilibrium with restoring forces. Hence, F= 65.94 N is significantly greater than F_B & F_C in order to maintain a constant amplitude of 0.035 m.
The magnets 'B' & 'C' are thus placed at 30 mm from either ends of the sleeve corresponding to F= 65.94 as in table- 6 .

E. Validation Of The Objective

The objective is validated by deriving the equation of motion, which in this case contains the variables of position and time which is used to determine the position of magnet 'A' at any given time.
For an underdamped system with harmonic excitation, the equation of motion [4] is given by,

$$x(t) = Ae^{-\xi\omega_n t}\sin(\omega_d t + \phi) + X\cos(\omega t - \theta) \qquad \ldots\ldots\ldots (6)$$

Using the initial conditions, $x_o = x(0)$ and $v_o = v(0)$, the constant are given by,

$$\phi = \tan^{-1}\left(\frac{\omega_d(x_0 - X\cos(\theta))}{v_0 + (x_0 - X\cos(\theta))\xi\omega_n - \omega X\sin(\theta)}\right)$$

©IJRASET 2015: All Rights are Reserved

Volume 3 Issue XI, November 2015
ISSN: 2321-9653
International Journal for Research in Applied Science & Engineering Technology (IJRASET)

$$A = \frac{x_0 - X\cos(\theta)}{\sin(\phi)}$$

$$\theta = \tan^{-1}\left(\frac{2\xi\omega_n\omega}{\omega_n{}^2 - \omega^2}\right)$$

$$\theta = 2.22°$$

$$\omega_d = \omega_n\sqrt{1-\xi^2} = 91.71 \text{ rad/sec}$$

$$\phi = -3.246°$$

$$A = -4.639 \times 10^{-4} \text{ m}$$

Using the values of θ, ω_d, ϕ & A, in equation- 6:

$$x(t) = -4.639 * (10^{-4}) * e^{-4.5915*t} * \sin(91.71* t - 3.246) + 0.035 * \cos(31.4 * t - 2.22)$$

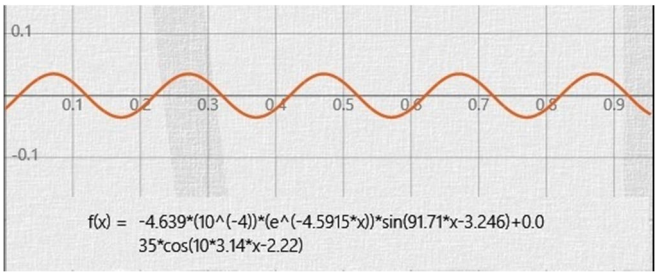

Fig.4 Graph for function x(t)

The above graph shows that amplitude of 0.035 m is reached every 0.2 seconds which gives a net frequency of 5 Hz as desired which is also verified through higher values of time. This validates the continuous periodic motion of magnet 'A' under the influence of magnetic forces for infinite time under ideal conditions.

Now that the system has been validated for its working, the rest of the mechanical parts like springs and flywheel are designed to meet the desired intent.

VI. CONCLUSION

This concept has been designed with conditions of maximum amplitude of vibration taken as 35mm and 300rpm as output. This has been validated by the design which verifies the amplitude of continuous S.H.M. Further, the design of the major associated components such as spring, connecting rod, crankshaft, flywheel, etc. can be carried out using conventional design which is not a part of this system design. The efficiency of the system can further be improved by providing a coil wound around the sleeve. The magnet 'A' in motion will induce an EMF inside the coil due to Faraday's law of Electromagnetic Induction to produce electricity.

REFERENCES

[1] (2015) Wikipedia website [online]. Available: https://en.wikipedia.org/wiki/Force_between _magnets
[2] S.S. Rao. "Mechanical Vibrations", 4th Edition. Pearson Education, Inc.
[3] H.C. Verma. "Concepts of Physics- 1"
[4] D. J. Inman. "Engineering Vibration", 3rd Edition. Upper Saddle River, NJ, 2008, Pearson Education, Inc.

©IJRASET 2015: All Rights are Reserved

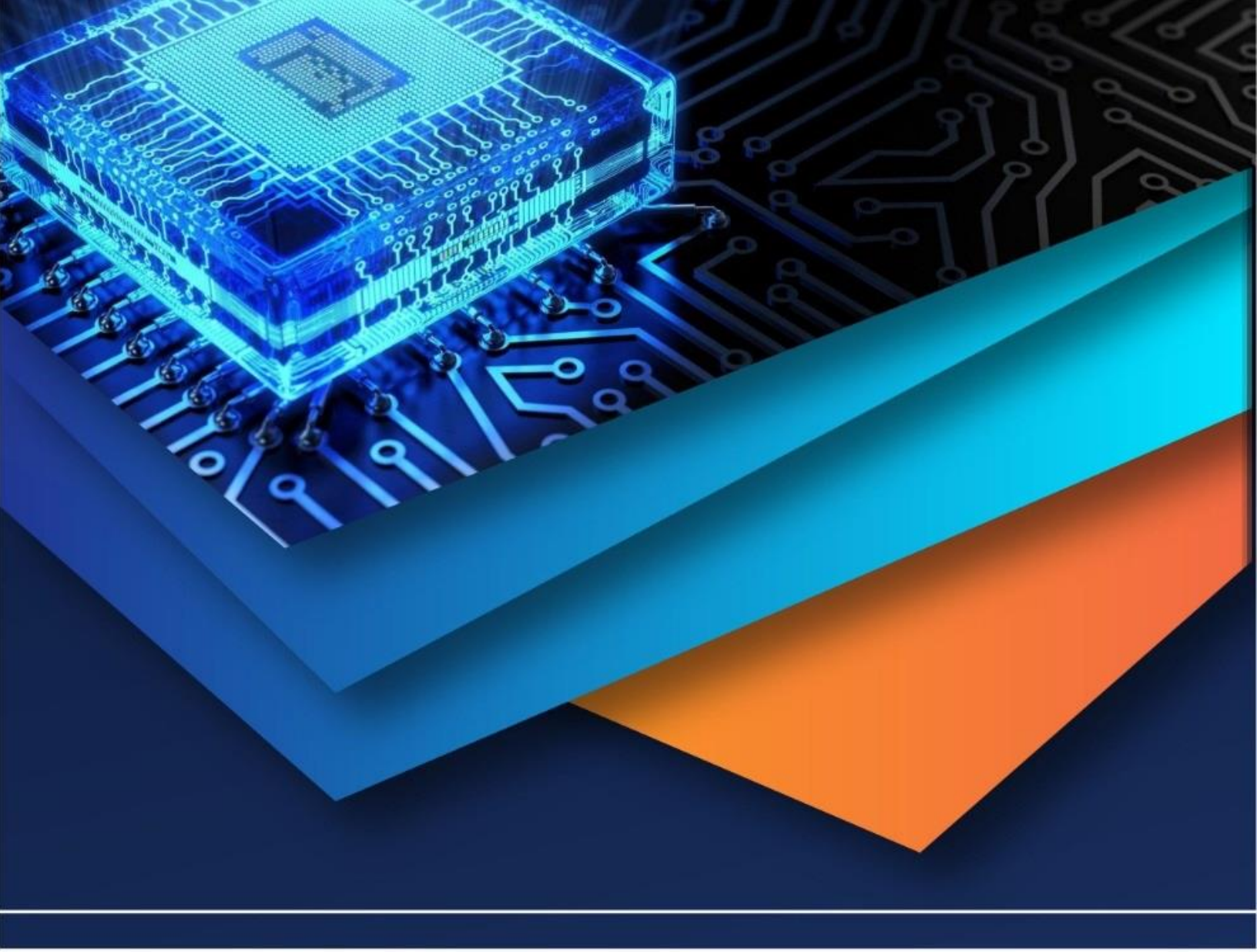

10.22214/IJRASET

45.98

IMPACT FACTOR: 7.129

IMPACT FACTOR: 7.429

INTERNATIONAL JOURNAL FOR RESEARCH

IN APPLIED SCIENCE & ENGINEERING TECHNOLOGY

Call : 08813907089 (24*7 Support on Whatsapp)