iJRASET
International Journal For Research in Applied Science and Engineering Technology



INTERNATIONAL JOURNAL FOR RESEARCH

IN APPLIED SCIENCE & ENGINEERING TECHNOLOGY

Volume: 3 **Issue:** XI **Month of publication:** November 2015

DOI:

www.ijraset.com

Call: 08813907089 | E-mail ID: ijraset@gmail.com

Volume 3 Issue XI, November 2015
ISSN: 2321-9653
International Journal for Research in Applied Science & Engineering Technology (IJRASET)

A Novel High Voltage Gain with Boost–Fly Back Converter for PV Fed Induction Motor Drive

Chandana Nadella[#1], L.Veerakotlu*[2]
[1]M-tech (PE & D), EEE Dept, Nova College of Engg & Technology, Jupudi, Ibrahimpatnam, Krishna (Dt); AP, India.
[2]Asst. professor, EEE Dept, Nova College of Engg & Technology, Jupudi, Ibrahimpatnam, Krishna (Dt); AP, India.

Abstract:-In rural areas renewable energy sources plays a key role in power generation and transmission. Where the power transmission from conventional energy sources is complicated, bulky electric drives and utility applications required, power converter construction has been introduced as a substitute in medium voltage and high power requirements using Renewable Energy Systems. Additional merits of renewable power source are light, dirt free and pollution free operation. By using inverter module in order to meet the required load demand, it is better to integrate the renewable energy power with the application of drive connected system by using inverter module. An advanced power electronics converter is used to meet the high power load applications. A new interleaved high step-up boost-fly back converter with voltage multiplier cell is proposed in this paper to avoid the extremely narrow turn-off period and to decrease the current ripple. The voltage multiplier module is composed of the secondary windings of the coupled inductors, a series capacitor, and two diodes. In addition, the switch voltage stress is reduced due to the transformer function of the coupled inductors, which makes low-voltage-rated MOSFETs offered to reduce the conduction losses and increases the lifetime of the input source. Which makes the presented circuit uncomplicated to design and control, additional active device is not required for the proposed converter fed induction motor drive using inverter module. The simulations results are conferred using Mat lab/Simulink.

Index Terms: Solar Panel (PV Panel), DC/DC Converter (boost), High Voltage Gain, Boost–Fly Back Converter, Voltage Multiplier Module, Induction Motor Drive, Proportional Integral controller, Battery Set, Inverter (VSI).

I. INTRODUCTION

Renewable energy sources (RESs) have skilled a rapid growth in the last decade due to technological developments, which have gradually decreased their costs and increased their efficiency at the same time. Moreover, the need to depend less on fossil fuels and to reduce emissions of greenhouse gases, requires an increase of the electricity produced by RESs. This can be accomplished mainly by resorting to wind and solar generation, which, however, introduces several problems in electric systems management due to the inherent nature of these kinds of RESs [2]-[6]. In fact, they are both characterized by unsuccessfully predictable energy production profiles, together with highly variable rates. As a consequence, the electric system cannot handle these intermittent power sources beyond certain restrictions, resulting in RES generation curtailments and, hence, in RES penetration levels lower than expected. Power electronic converters, especially PWM inverters have been extending their range of use in industry because they provide reduced energy consumption, better system efficiency, superior quality of product, high-quality maintenance, and so on.

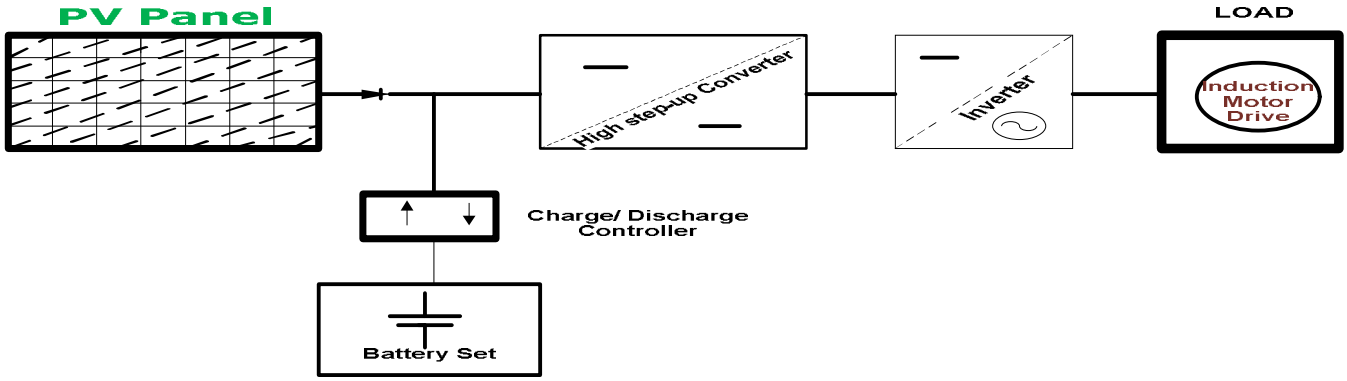

Fig. 1 Block diagram of renewable energy System

The development of “green power” generation has recently become very important to address environmental pollution and the

©IJRASET 2015: All Rights are Reserved

Volume 3 Issue XI, November 2015
ISSN: 2321-9653

problem of exhaustion of fossil energy reserves. Solar cells represent one of the most efficient and effective alternative renewable energy sources for many applications, such as hybrid electric vehicles, uninterruptible power supplies, telecom back-up facilities, and portable electronics. Today, interleaved boost converters are widely applied in fuel cell, solar panels, and battery sources for boosting a very low voltage to an appropriate voltage for the alternating current (ac) inverters or front-end applications [1].

Their main advantages are the current distribution, current ripple cancellation, fast transient response, and the size of the passive components reduction; so the reliability is increased and high power output is realized. Fig. 1 shows a block diagram of renewable energy system that consists of renewable energy sources, a step-up converter, and an inverter for ac application. The high step-up conversion may require two-stage converters with cascade structure for enough step-up gain, which decreases the efficiency and increases the cost. Thus, a high step-up converter is seen as an important stage in the system because such a system requires a sufficiently high step-up conversion with high efficiency [3].

Power converters have required improvement in the power efficiency as well as reduction of size and weight especially in mobile information/communication devices, traction converters, power control units for electric/hybrid vehicle, etc. Passive components and cooling devices usually occupy a much larger space than semiconductor devices in power electronics building block. It is well known that when many DGs are connected to utility grids, they can cause problems such as voltage rise and protection problem in the utility grid. To solve these problems, new concepts of electric power systems are proposed. Resonant converters eliminate most of the switching losses encountered in Pulse Width Modulation converters[11].

In the proposed open loop system if we have connect RL load we can't maintain the load voltage constant at the DC bus because of harmonics in the inductive loads. So we go for closed loop system for maintaining constant DC voltage at the DC bus. In the proposed system we are using PI controller for performance improvement. Fig.2 shows the interleaved converter fed with 3-phase induction motor with closed loop PI controller.

The main aim of this paper is to extend a modular high-efficiency high step-up boost converter with a forward energy-delivering circuit integrated voltage-doublers as an interface for high power applications. In the proposed topology, the inherent energy self-resetting capacity of auxiliary transformer can be achieved without any resetting winding. Moreover, advantages of the proposed converter module such as low switcher voltage stress, lower duty ratio, and higher voltage transfer ratio features are obtained.[8].

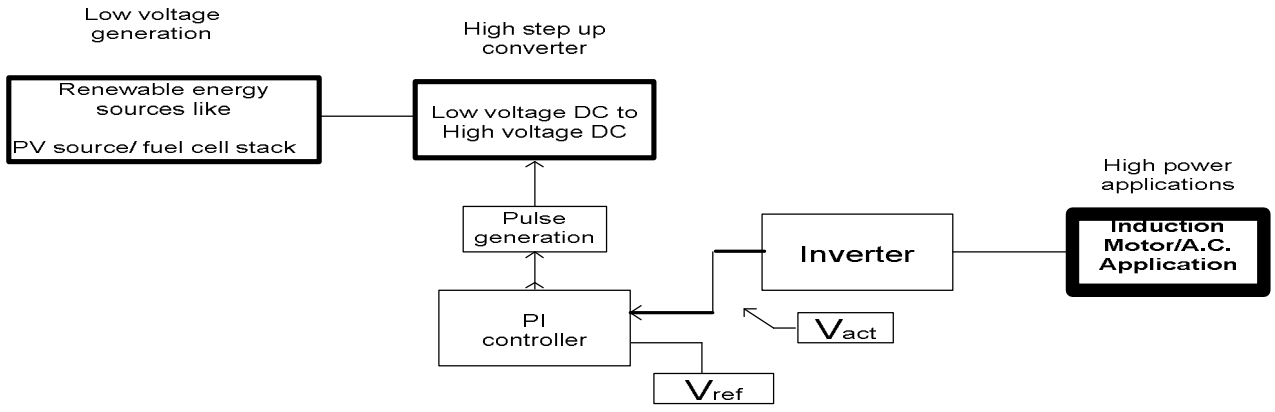

Fig.2 block diagram of proposed standalone system

In spite of these advances, high step-up single-switch converters are unsuitable to operate at heavy load given a more input current ripple, which increases conduction losses. The conventional interleaved boost converter is an outstanding for high-power requirements and power factor correction. Unhappily, the step-up gain is restricted, and the voltage stresses on semiconductor components are equal to output voltage. Hence, based on the abovementioned considerations, modifying a conventional interleaved boost converter for high step-up and high-power application is a suitable approach [13].

The DC-DC Converter has low switching power losses and high power efficiency. The use of single transformers gives a low-profile design for the step-up DC-DC converter for low-DC renewable energy sources like photovoltaic module and fuel cell.

©IJRASET 2015: All Rights are Reserved

Volume 3 Issue XI, November 2015
ISSN: 2321-9653
International Journal for Research in Applied Science & Engineering Technology (IJRASET)

The proposed converter is a conventional interleaved boost converter integrated with a voltage multiplier cell, and the voltage multiplier cell is composed of switched capacitors and coupled inductors.

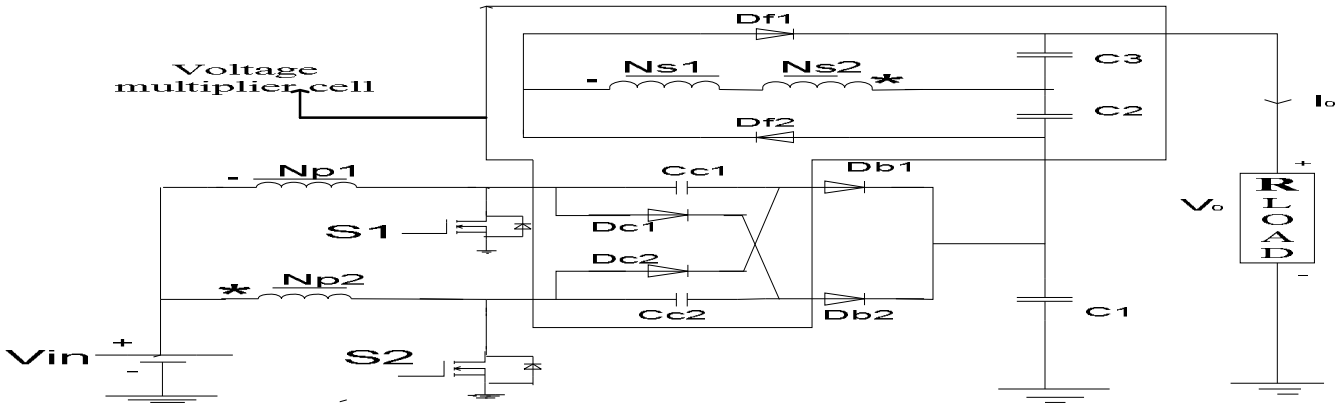

Fig. 3. Proposed high step-up interleaved converter with voltage multiplier cell.

The coupled inductors can be intended to extend step-up gain, and the switched capacitors offer extra voltage conversion ratio. as well as, when one of the switches turns off, the energy stored in the magnetizing inductor will transfer via individual paths; thus, the current distribution not only decreases the conduction losses by less effective current but also makes currents through some diodes decrease to zero before they turn off, which reduces diode reverse recovery losses[5].

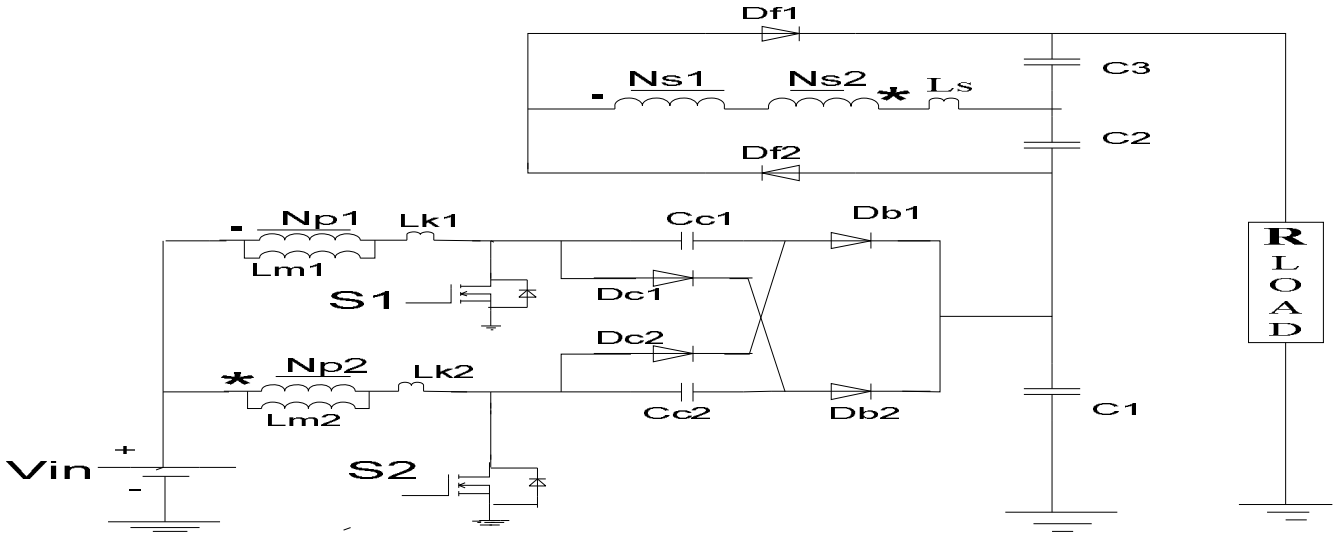

Fig. 4. Equivalent circuit of the proposed converter.

II. OPERATING MODES OF PRAPOSED CONVERTER

The proposed high step-up interleaved converter with a voltage multiplier cell is shown in Fig. 3. The voltage multiplier cell is composed of two coupled inductors and two switched capacitors and is inserted between conventional interleaved boost converters to form a modified boost–fly back–forward interleaved structure. As the switches turn off by turn, the phase whose switch is in OFF state performs as a fly back converter, and the other phase whose switch is in ON state performs as a forward converter. Primary windings of the coupled inductors with N_p turns are employed to decrease input current ripple, and secondary windings of the coupled inductors with Ns turns are connected in series to make bigger voltage gain[14]. The turn ratios of the coupled inductors are equal. The coupling references of the inductors are denoted by "·" and "∗"

In the circuit analysis, the proposed converter operates in continuous conduction mode (CCM), and the duty cycles of the power

©IJRASET 2015: All Rights are Reserved

Volume 3 Issue XI, November 2015
ISSN: 2321-9653

switches during steady operation are greater than 0.5 and the switching signals are shifted by Ts/2. The operation in one switching period of the proposed converter contains eight modes, which are shown in fig.5.

Mode 1: At initial state assume that, the power switch S_2remains in ON state, and the other power switch S_1 begins to turn on. The diodes D_{c1}, D_{c2}, D_{b1}, D_{b2}, and D_{f1} are reversed biased, as shown in Fig. 5(a). The series leakage inductors Ls quickly release the stored energy to the output terminal via fly back– forward diode D_{f2}, and the current through series leakage inductors Ls decreases to zero. Thus, the magnetizing inductor L_{m1} still transfers energy to the secondary side of coupled inductors. The current through leakage inductor L_{k1} gradually increases, and the other current through leakage inductor L_{k2} gradually decreases.

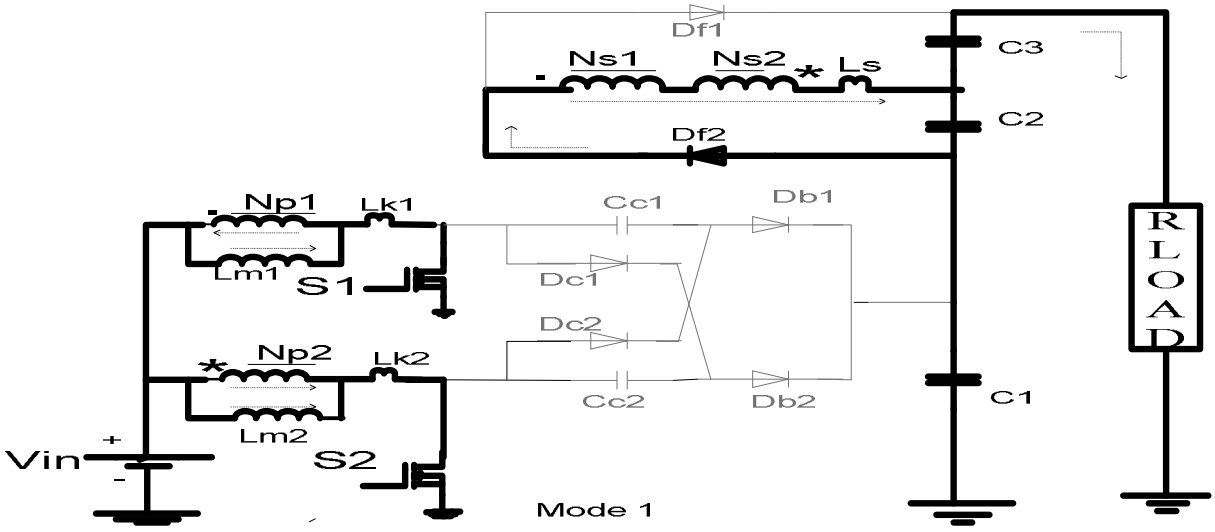

Fig 5(a). Mode 1

Mode 2: In 2nd mode, two power switches $S_1$and S_2 remain in ON state, and all diodes are reversed biased, as shown in Fig. 5(b). Currents through leakage inductors Lk_1 and Lk_2 are increased linearly because of charging by input voltage source Vin.

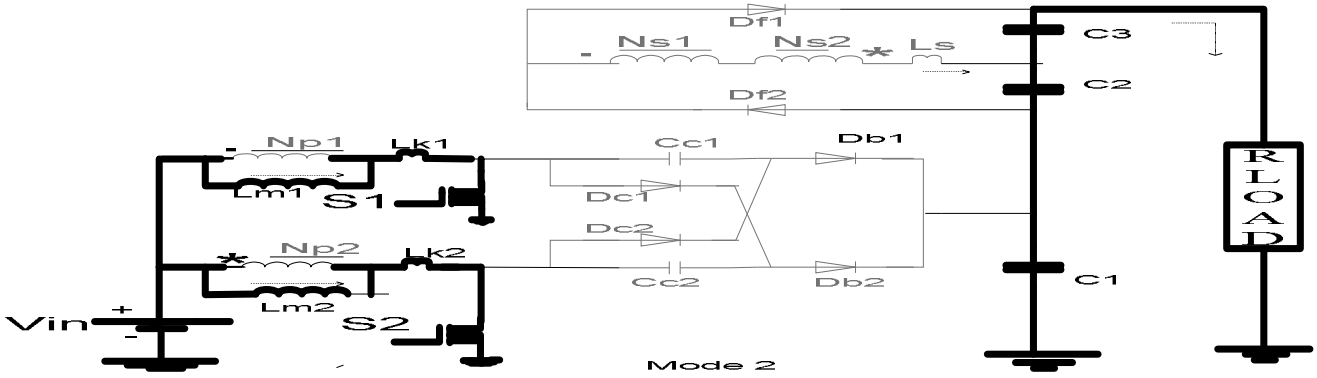

Fig 5.(b) Mode 2

Mode 3: In this mode, the switch S_1 remains in ON state, and the other switch S_2 starts to turn off. The diodes D_{c1}, D_{b1}, and $D_{f2}$are reversed biased, as shown in Fig. 5(c). The energy stored in magnetizing inductor L_{m2} delivers to the secondary side of coupled inductors, and the current through series leakage inductors L_s flows to output capacitor C_3 through fly back–forward diode D_{f1}. The voltage stress on switch S_2 is clamped by clamping capacitor C_{c1} which equals the output voltage of the boost converter. The input voltage source, magnetizing inductor L_{m2}, leakage inductor L_{k2}, and clamping capacitor C_{c2} discharge energy to the output terminal; therefore,V_{C1} obtains a twice the output voltage of the boost converter[9].

©IJRASET 2015: All Rights are Reserved

Volume 3 Issue XI, November 2015
ISSN: 2321-9653

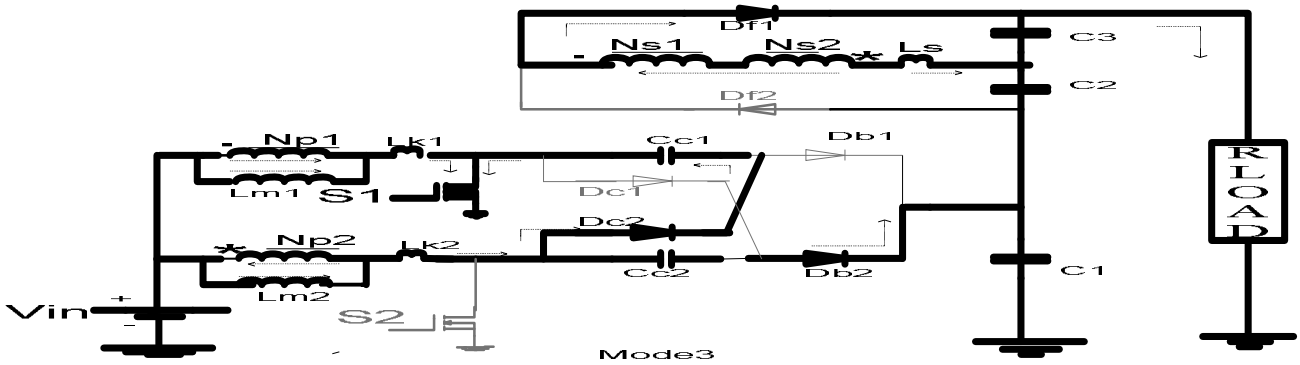

Fig 5.(c) Mode 3

Mode 4: In this mode, the current i_{Dc2} has obviously decreased to zero because of the magnetizing current distribution, therefore diode reverse recovery losses and conduction losses are decreased. Both power switches and all diodes remain in previous states except the clamp diode D_{c2}, as shown in Fig. 5(d).

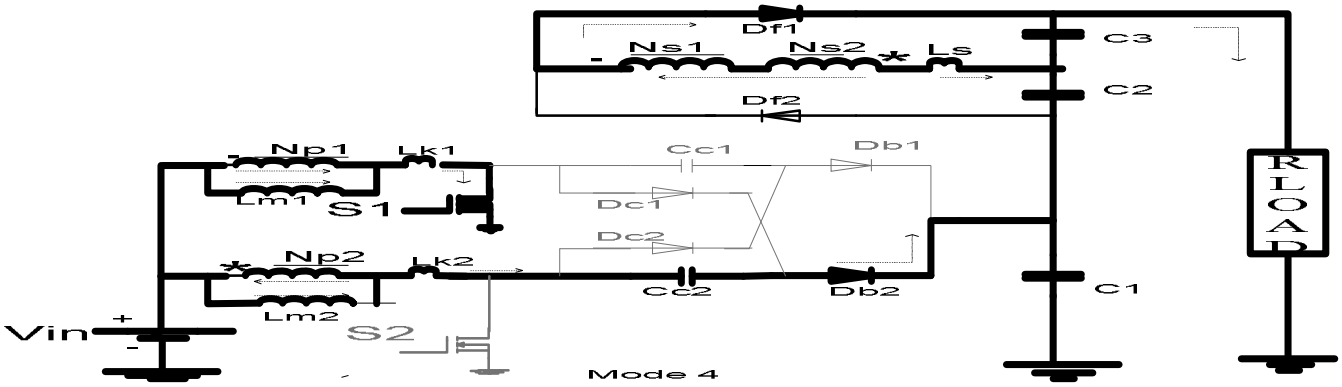

Fig 5 (d) Mode 4

Mode 5: In this mode, the switch S_1 remains in ON state, and the other switch S_2 starts to turn on. The diodes D_{c1}, D_{c2}, D_{b1}, D_{b2}, and D_{f2} are reversed biased, as shown in Fig. 5(e). The series leakage inductors L_s rapidly release the stored energy to the output terminal through fly back–forward diode D_{f1}, and the current through series leakage inductors reduced to zero. Therefore, the magnetizing inductor L_{m2} still delivers energy to the secondary side of coupled inductors. The current through leakage inductor L_{k2} increases gradually, and the other current through leakage inductor L_{k1} gradually decreases.

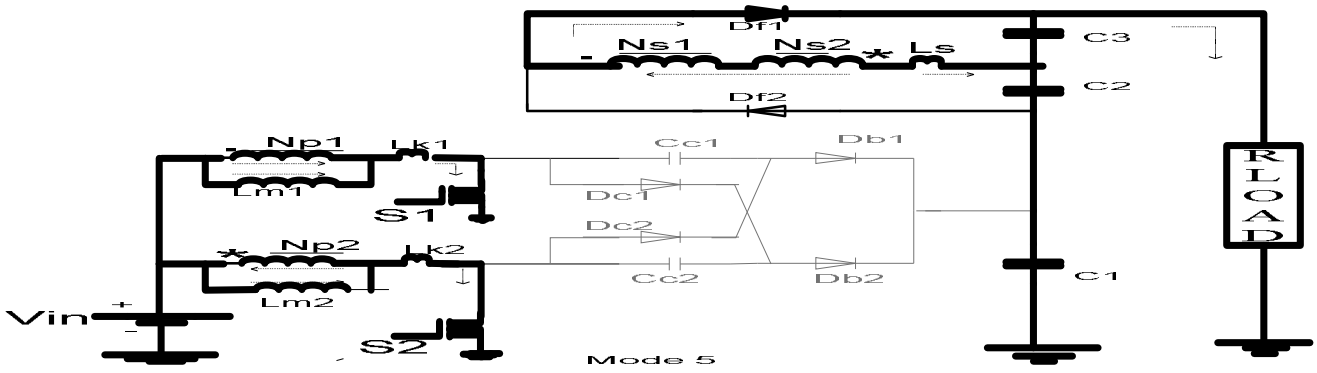

Fig 5 (e) Mode 5

Mode 6: In this mode, the two switches S_1 and S_2 remain in ON state, and all diodes are reversed biased, as shown in Fig. 5(f). Both currents through leakage inductors L_{k1} and L_{k2} are increased gradually due to charging by input voltage source Vin [9].

©IJRASET 2015: All Rights are Reserved

Volume 3 Issue XI, November 2015
ISSN: 2321-9653
International Journal for Research in Applied Science & Engineering Technology (IJRASET)

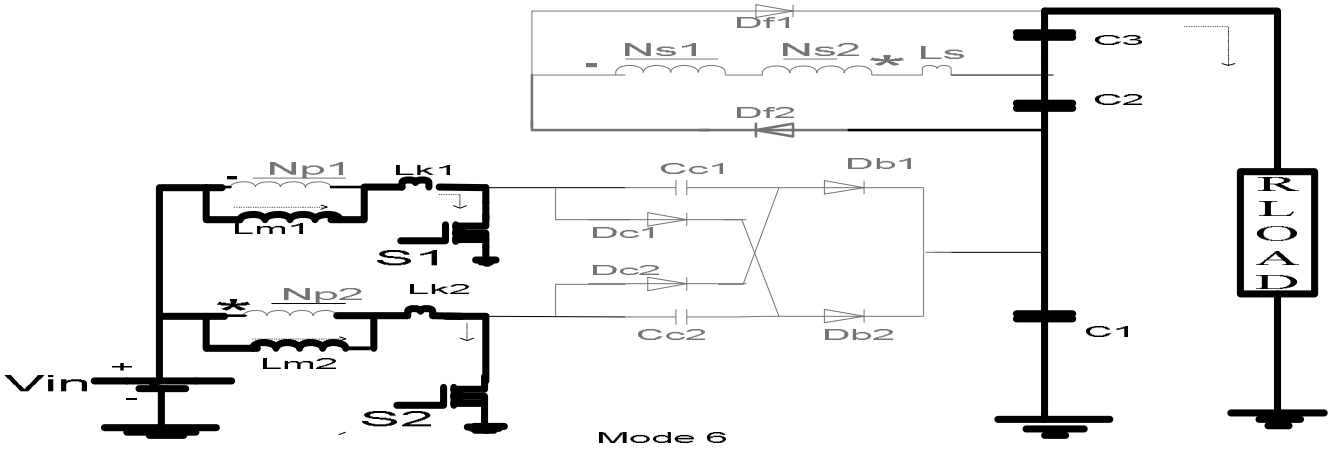

Fig 5 (f) Mode 6

Mode 7: In this mode, the switch S_2 remains in ON state, and the other power switchS_1begins to turn off. The diodes Dc_2, Db_2, and $D_{f1}$are reversed biased, as shown in Fig. 5(g). The energy stored in magnetizing inductor Lm_1delivers to the secondary side of coupled inductors, and the current through series leakage inductors flows to output capacitor C_2 via fly back–forward diode Df_2. The voltage stress on power switch $S_1$is clamped by clamp capacitor Cc_2 which equals the output voltage of the boost converter. The input voltage source, magnetizing inductor Lm_1, leakage inductor L_{k1}, and clamping capacitor Cc_1 discharge energy to the output terminal; thus,V_{C1} obtains twice the output voltage of the boost converter[13].

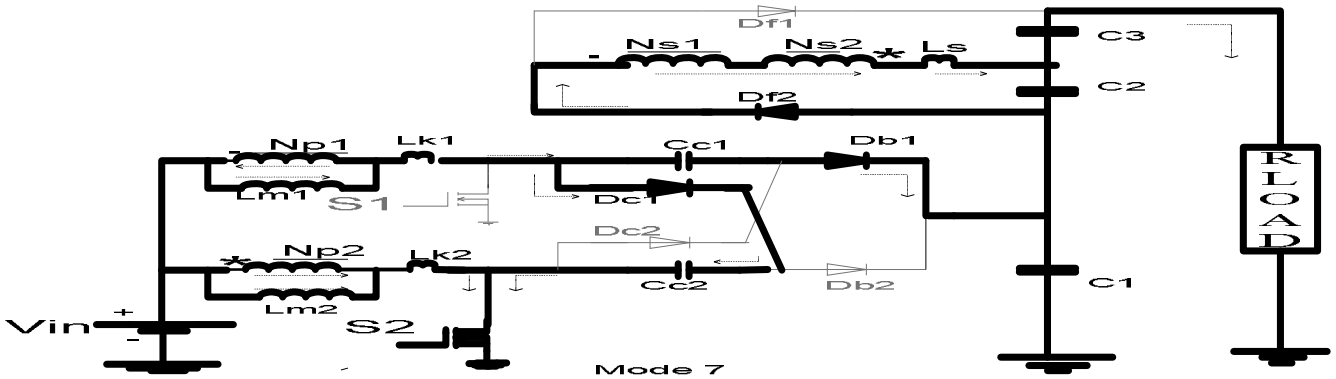

Fig 5 (g) Mode 7

Mode 8: In this mode, the current i_{Dc1} has naturally decreased to zero due to the magnetizing current distribution, and hence, diode reverse recovery losses are alleviated and conduction losses are decreased. Both power switches and all diodes remain in previous states except the clamp diode D_{c1}, as shown in Fig. 5(h).

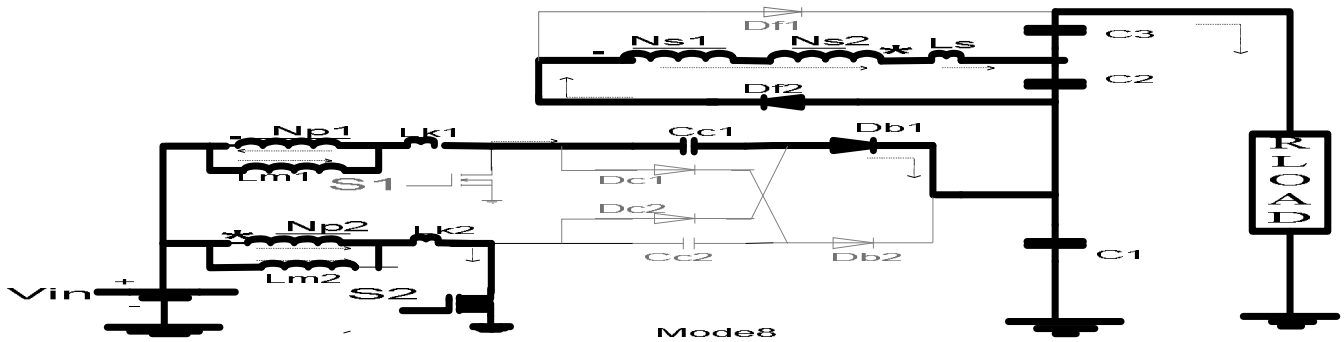

Fig 5 (h) Mode 8

©IJRASET 2015: All Rights are Reserved

III. STEADY-STATEANALYSIS

The transient characteristics of circuitry are disregarded to simplify the circuit performance analysis of the proposed converter in CCM, and some formulated assumptions are as follows.
All of the components in the proposed converter are ideal.
Leakage inductors L_{k1}, L_{k2}, and Ls are neglected.
Voltages on all capacitors are considered to be constant because of infinitely large capacitance.
Due to the completely symmetrical interleaved structure, the related components are defined as the corresponding symbols such as $D_{c1}$and D_{c2} defined as Dc.

A. Step-Up Gain

The voltage on clamping capacitor C_c can be considered as an output voltage of the boost converter; therefore, voltage V_{Cc} can be derived from

$$V_{Cc} = \frac{1}{1-D} V_{in}. \qquad (1)$$

As one of the switches turns off, voltage V_{C1}can be obtains twice the output voltage of the boost converter derived from

$$V_{c1} = \frac{1}{1-D} V_{in} + V_{Cc} = \frac{2}{1-D} V_{in} \qquad (2)$$

The output filter capacitors C_2 and C_3 are charged by energy transformation from the primary side. When S_2 is in ON state And $S_1$is in OFF state,V_{C2} is equal to the induced voltage of N_{s1} plus the induced voltage of N_{s2}, and when $S_1$is in ON state and S_2 is in OFFstate,$V_{C3}$is also equal to the induced voltage of N_{s1}plus the induced voltage of N_{s2}. Thus, voltages V_{C2} and V_{C3}can be derived from

$$= V_{c3} = n.V_{in}\left(1 + \frac{D}{1-D}\right) = \frac{n}{1-D} V_{in} \qquad (3)$$

The output voltage can be derived from

$$V_0 = V_{C1} + V_{C2} + V_{C3} = \frac{2n+2}{1-D} V_{in} \qquad (4)$$

In addition, the voltage gain of the proposed converter is

$$\frac{V_0}{V_{in}} = \frac{2n+2}{1-D} \qquad (5)$$

Equation (5) confirms that the proposed converter has a high step-up voltage gain without an extreme duty cycle.

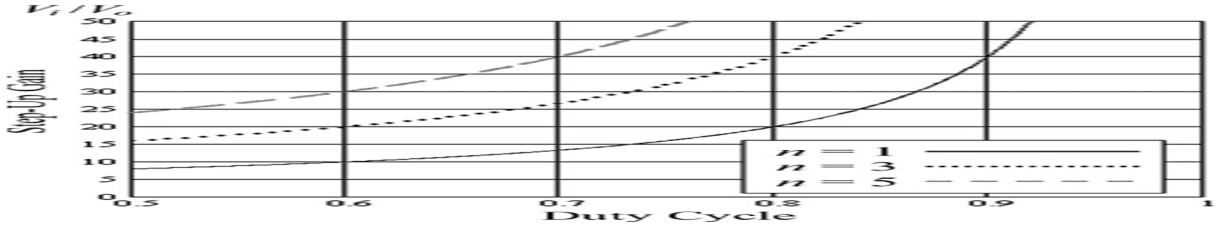

Fig6.Voltage gain versus turn ratio and duty cycle

The curve of the voltage gain related to turn ratio and duty cycle is shown in Fig. 6. When the duty cycle is merely 0.6, the voltage gain reaches ten at a turn ration of one; the voltage gain reaches 30 at a turn ration of five.

B. Voltage Stress on Semiconductor Component

The voltage ripples on the capacitors are neglected to simplify the voltage stress analysis of the components of the proposed converter. The voltage stress on power switch S is clamped and derived from

©IJRASET 2015: All Rights are Reserved

Volume 3 Issue XI, November 2015
ISSN: 2321-9653
International Journal for Research in Applied Science & Engineering Technology (IJRASET)

$$V_{S1} = V_{S2} = \frac{1}{1-D}V_{in} = \frac{1}{2n+2}V_0 \quad (6)$$

Equation (6) confirms that low-voltage-rated MOSFET with low $R_{DS(ON)}$ can be adopted for the proposed converter to reduce conduction losses and costs. The voltage stress on the power switch S accounts for one fourth of output voltage Vo, even if turn ration is one. This feature makes the proposed converter suitable for high step-up and high-power applications[7].

The voltage stress on diode Dc is equal to V_{C1}, and the voltage stress on diode D_b is voltage V_{C1} minus voltage V_{Cc}.

These voltage stresses can be derived from

$$V_{Dc1} = V_{Dc2} = \frac{2}{1-D}V_{in} = \frac{1}{n+1}V_0 \quad (7)$$

$$V_{Db1} = V_{Db2} = V_{C1} - V_{C2} = \frac{1}{1-D}V_{in} = \frac{1}{2n+2}V_0 \quad (8)$$

The voltage stress on diode D_b is close to the voltage stress on power switch S. Although the voltage stress on diode

D_c is larger, it accounts for only half of output voltage Vo at a turn ration of one. The voltage stresses on the diodes are lower the voltage gain is comprehensive by increasing turn ratio. The voltage stress on diode D_f equals the V_{C2} plus $V_{C3,}$ which can be derived from

$$V_{Df1} = V_{Df2} = \frac{2n}{1-D}V_{in} = \frac{n}{n+1}V_0 \quad (9)$$

Even though the voltage stress on the diode D_f increases as the turn ratio n increases, the voltage stress on the diodes D_f is always lower than the output voltage.

IV. CLOSED LOOP SYSTEM

Sometimes, we may use the output of the control system to adjust the input signal. This is called feedback. Feedback is a special feature of a closed loop control system. A closed loop control system compares the output with the expected result or command status, and then it takes appropriate control actions to adjust the input signal. Therefore, a closed loop system is always equipped with a sensor, which is used to monitor the output and compare it with the expected result. Fig. 7 shows a simple closed loop system. The output signal is fed back to the input to produce a new output. A well-designed feedback system can often increase the accuracy of the output..

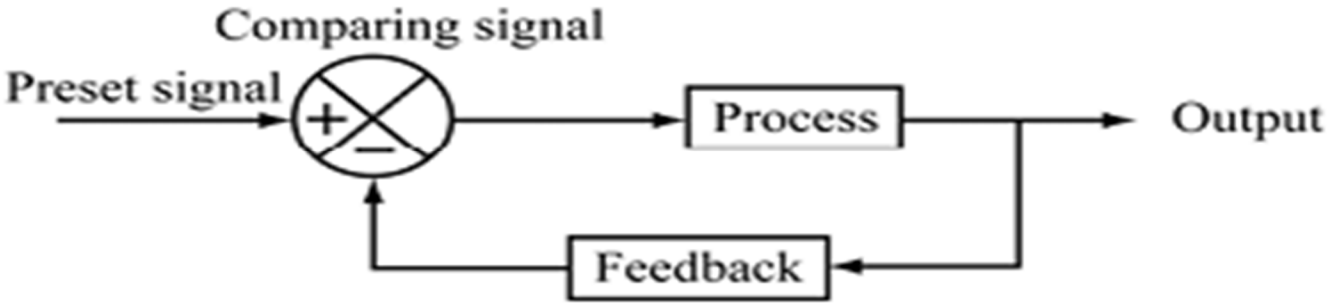

Fig. 7. Block diagram of a closed loop control system

Feedback can be divided into positive feedback and negative feedback. Positive feedback causes the new output to deviate from the present command status. For example, an amplifier is put next to a microphone, so the input volume will keep increasing, resulting in a very high output volume. Negative feedback directs the new output towards the present command status, so as to allow more sophisticated control. For example, a driver has to steer continuously to keep his car on the right track. Most modern appliances and machinery are equipped with closed loop control systems. Examples include air conditioners, refrigerators, automatic rice cookers, automatic ticketing machines, etc. One advantage of using the closed loop control system is that it is able to adjust its output automatically by feeding the output signal back to the input. When the load changes, the error signals generated by the system will

©IJRASET 2015: All Rights are Reserved

Volume 3 Issue XI, November 2015
ISSN: 2321-9653
International Journal for Research in Applied Science & Engineering Technology (IJRASET)

adjust the output. However, closed loop control systems are generally more complicated and thus more expensive to make[14].

A. Operation of a Closed-Loop Control System

Most people may not think about control systems in their day to day activities. Control systems are used millions of times a day. Control systems are found in cars, home electronics, power plants, and cities worldwide. The most common type of control system is a closed loop system. The closed loop system consists of five essential processes. The processes are carried out in each basic part of a control system and they are: input transducer, summing junction, controller, plant or process, and the output transducer.

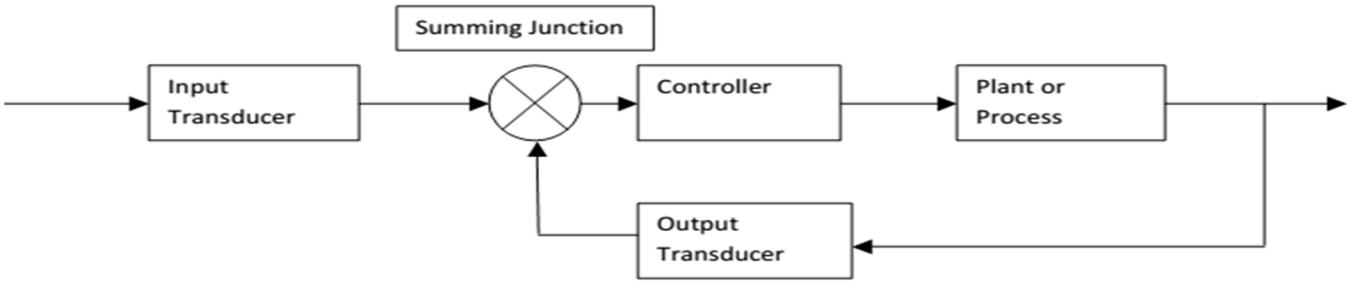

Fig. 8 Diagram of a Closed-loop Control System

The Proportional-Integral (P-I) controller is one of the conventional controllers and it has been widely used. The major features of the P-I controller are its ability to maintain a zero steady-state error to a step change in reference. A PI Controller (proportional-integral controller) is a special case of the PID controller in which the derivative (D) of the error is not used. The controller output is given by

$$K_p\Delta + K_I \int \Delta dt$$

The applications of the induction motor are:

Used in Robotics, Billet Shearing Machines, Section Straightening Machines in Rolling mills, Grinding machine, varying load machine, Printing machine, Lathe machine, drives of fan etc[15].

V. SIMULATION RESULTS

Here the simulation carried by two different cases they are 1) High Step-Up Interleaved Converter with a Voltage Multiplier Module 2) High Step-Up Interleaved Converter with a Voltage Multiplier Module with Induction Machine Drive Connected System Using RES system in open loop condition 3) High Step-Up Interleaved Converter with a Voltage Multiplier Module with Induction Machine Drive Connected System Using RES system in closed loop condition

Case-1 High Step-Up Interleaved Converter with a Voltage Multiplier Module for R load

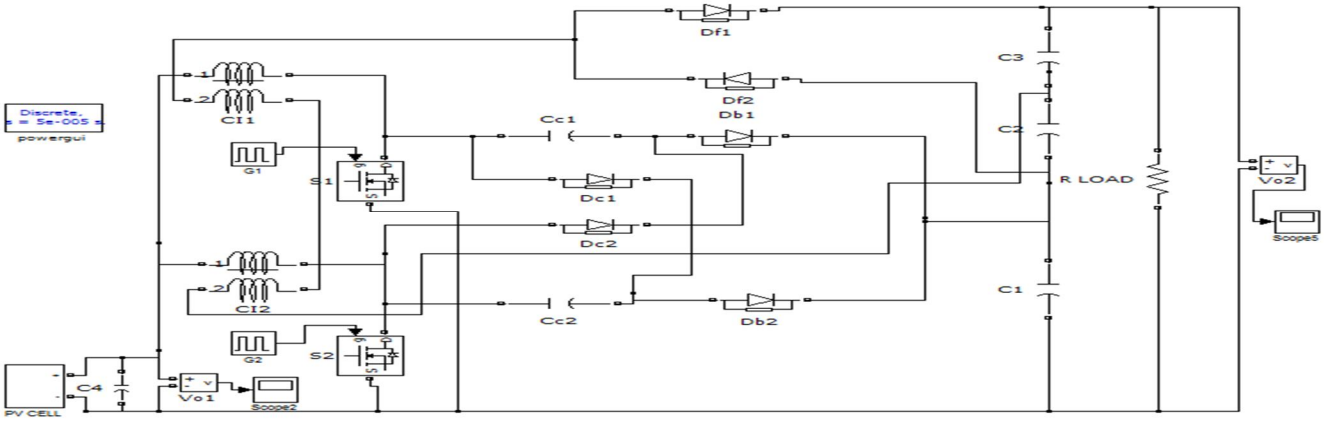

©IJRASET 2015: All Rights are Reserved

Volume 3 Issue XI, November 2015
ISSN: 2321-9653
International Journal for Research in Applied Science & Engineering Technology (IJRASET)

Fig.9 Simulink Model of High Step-Up Interleaved Converter with a Voltage Multiplier Module

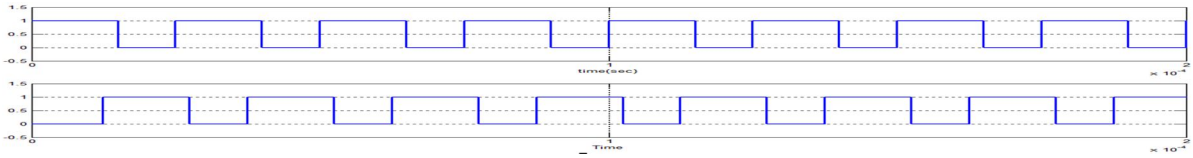

Fig.10.Simulation results of Gating Pulses of S_1 and S_2

Fig 10 shows the switching signals of power switches of S_1 and S_2 shifted by Ts/2.

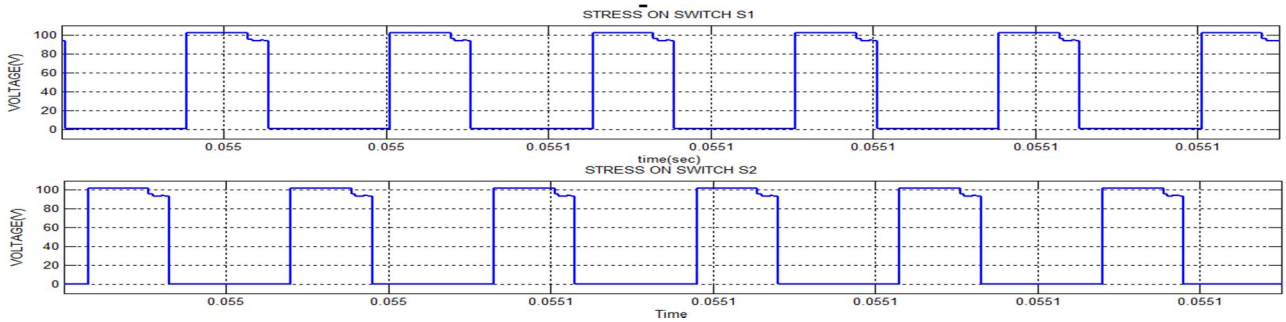

Fig.11 Simulation results of Output Voltages at S_1 and S_2

Fig 11 shows the voltage(100V) across the power switches S_1 and S_2 is much lower than the output voltage i.e 400V

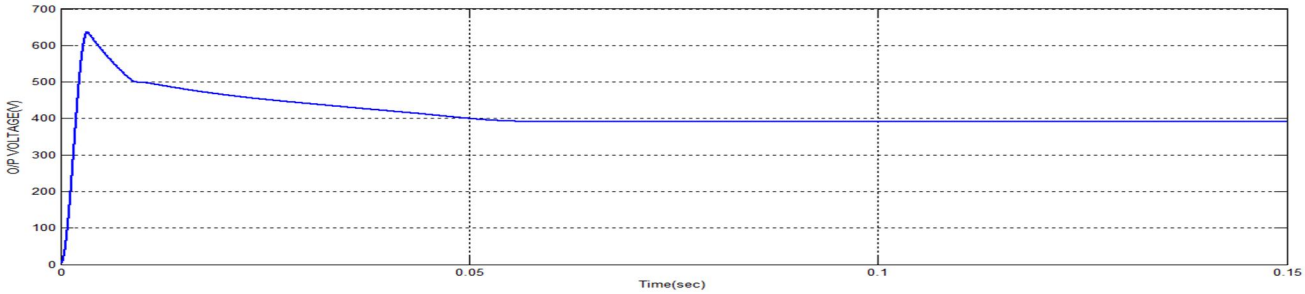

Fig.12 Simulation results of output voltage waveform across R load

Fig.12 Shows the Output Voltage of High Step-Up Interleaved Converter for R load

Case 2: High Step-Up Interleaved Converter with a Voltage Multiplier Module with Induction Machine Drive Connected System Using RES in open loop system

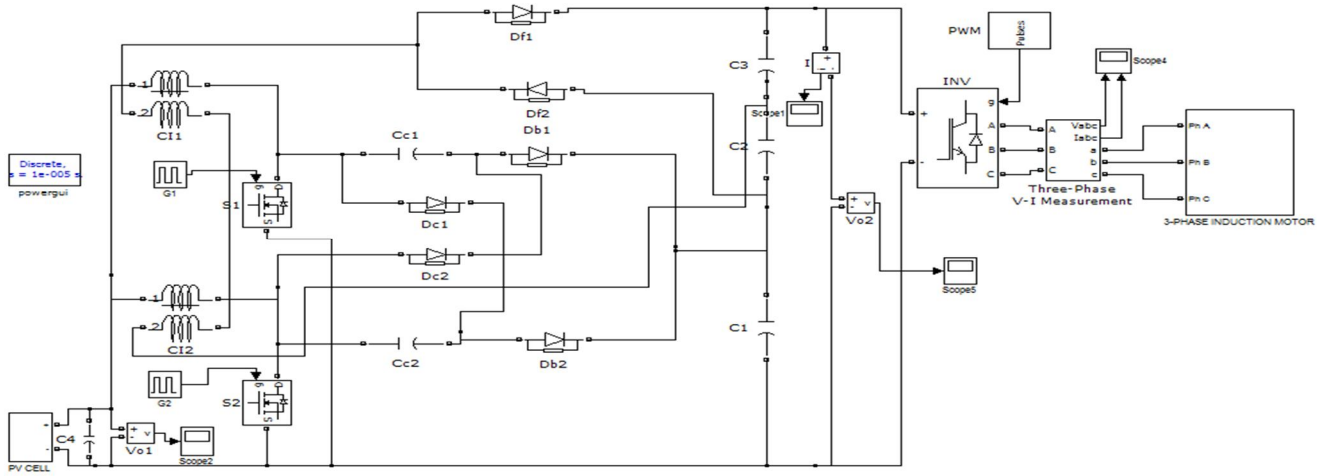

Fig.13 Simulink Model of High Step-Up Interleaved Converter with a Voltage Multiplier Module with Induction Machine Drive System using RES in open loop system

©IJRASET 2015: All Rights are Reserved

Volume 3 Issue XI, November 2015
ISSN: 2321-9653
International Journal for Research in Applied Science & Engineering Technology (IJRASET)

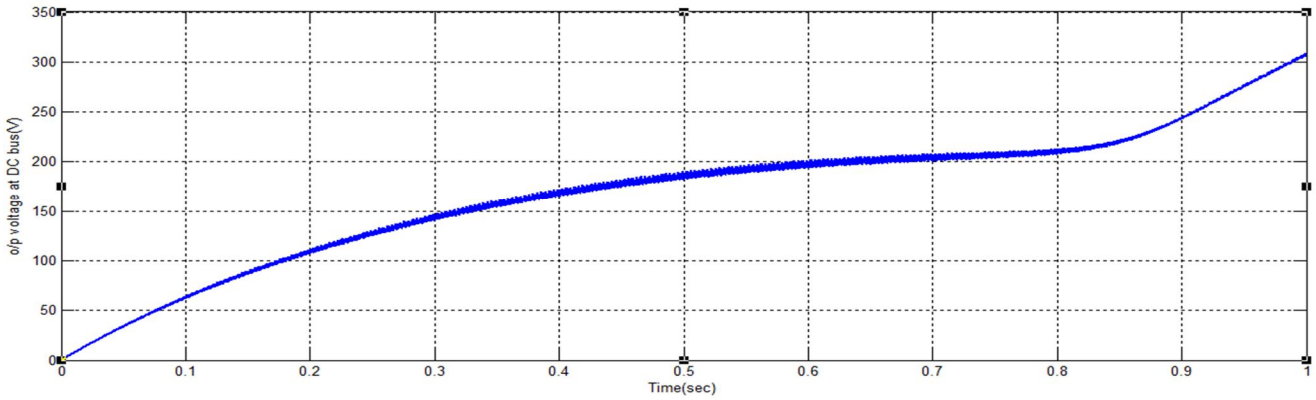

Fig 14. Output voltage of converter at the DC bus in open loop system

Fig 14 shows the output voltage of converter at DC bus in open loop condition that shows the voltage is not constant because of harmonics in the motor load so we go for closed loop system.

Case 3: High Step-Up Interleaved Converter with a Voltage Multiplier Module with Induction Machine Drive Connected System Using RES in closed loop system

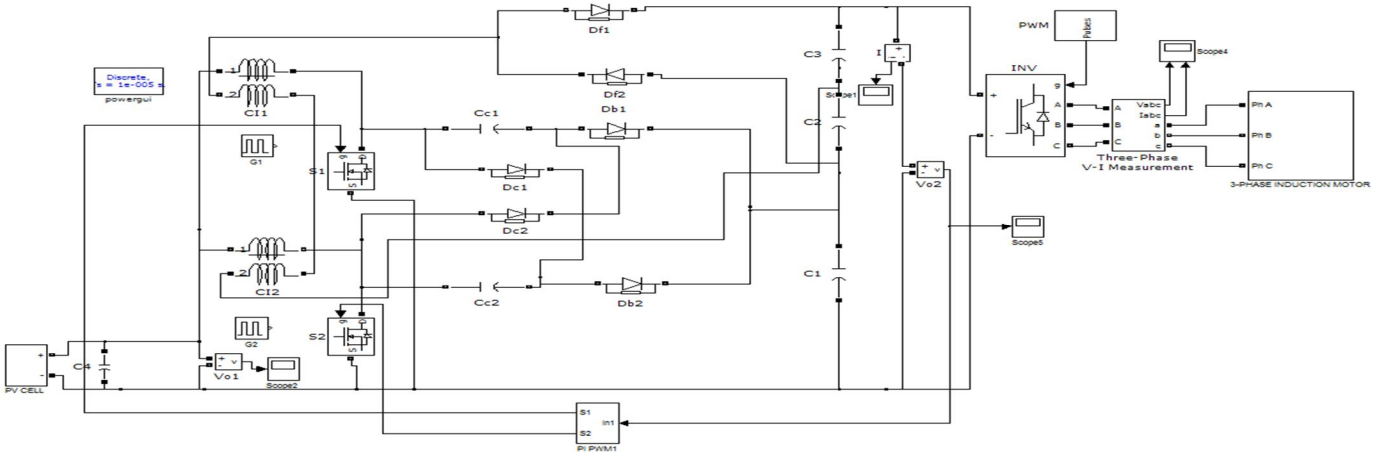

Fig.15 Simulink Model of High Step-Up Interleaved Converter with a Voltage Multiplier Module with Induction Machine Drive System using RES in closed loop system

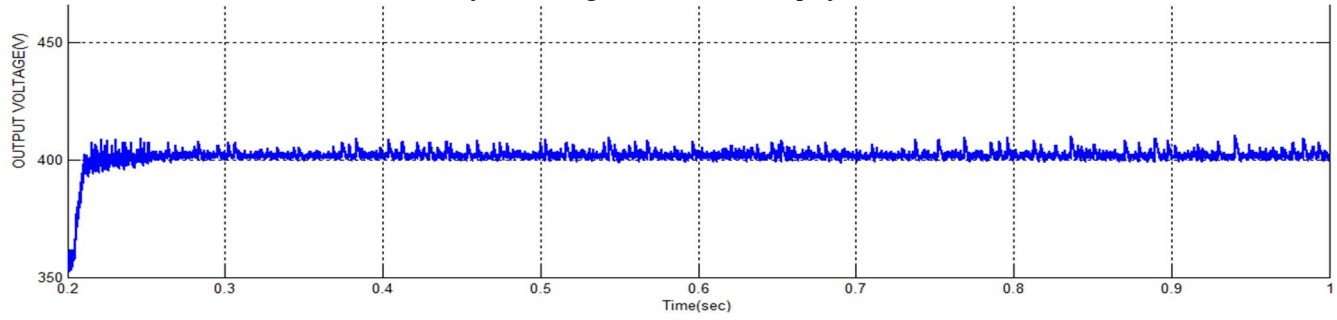

Fig 16. Output voltage of a converter at DC bus of inverter

Fig 16 shows the output voltage of converter at DC bus that shows the constant voltage(400V) is fed to inverter to operate induction motor drive.

©IJRASET 2015: All Rights are Reserved

Volume 3 Issue XI, November 2015
ISSN: 2321-9653
International Journal for Research in Applied Science & Engineering Technology (IJRASET)

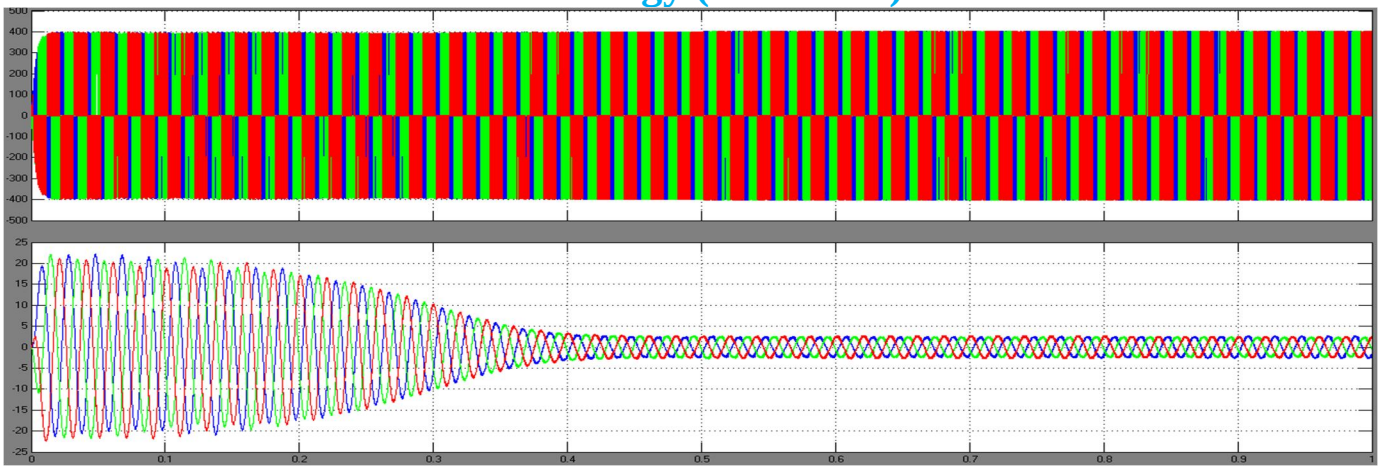

Fig.17 Output Voltage & Current

Fig.17 shows the Output Voltage & Current of inverter with Induction Machine Drive System.

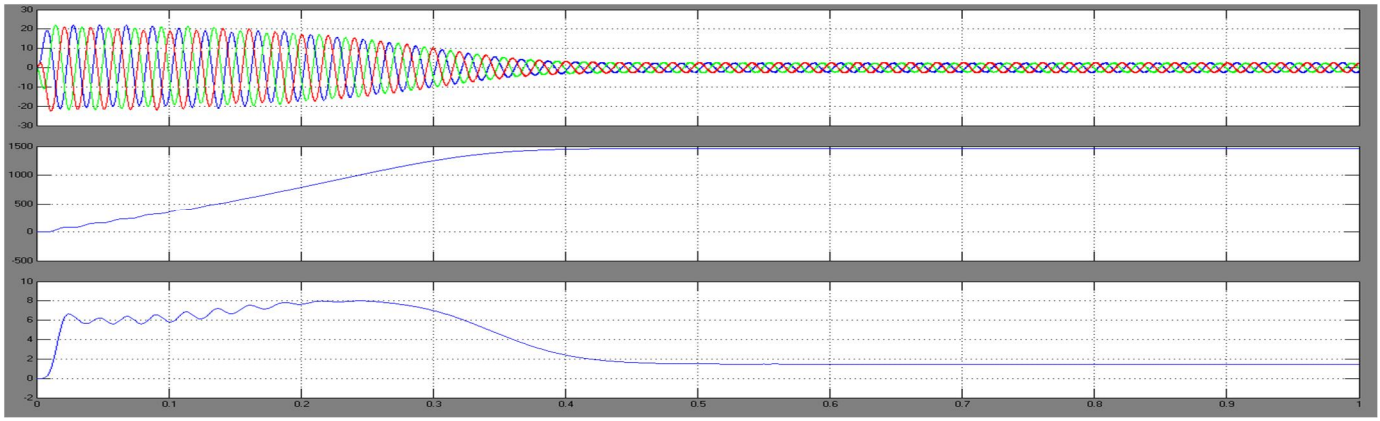

Fig.18 Stator Current, Speed, Electromagnetic Torque

Fig 18 shows the rotor currents, speed and electro-magnetic torque of the induction motor in closed loop system

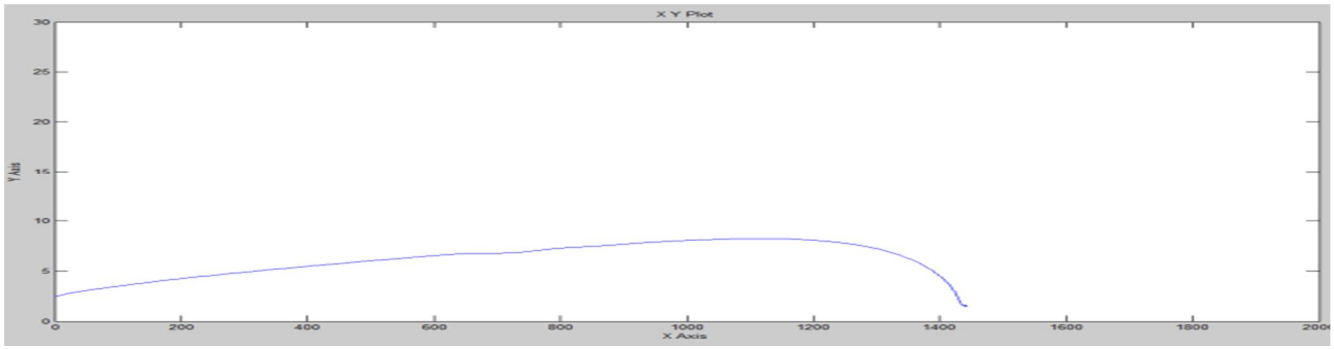

Fig 19. Speed torque characteristics of induction motor

Fig 19 shows the speed torque characteristics of induction motor under no load condition.

VI. CONCLUSION

Recently, developments in power electronics and semiconductor technology have lead improvements in power electronic systems. Pulse Width Modulation variable speed drives are increasingly applied in many new industrial applications that require superior performance. This paper has presented the simulation analysis of steady state value related consideration, for the proposed converter operated under open-loop & closed loop manner. The proposed converter has successfully implemented an efficient high step-up conversion through the voltage multiplier module. The interleaved structure reduces the input current ripple and distributes the

©IJRASET 2015: All Rights are Reserved

current through each component. In addition, the lossless passive clamp function recycles the leakage energy and constrains a large voltage spike across the power switch. Meanwhile, the voltage stress on the power switch is restricted and much lower than the output voltage (400 V). Thus, the proposed converter is suitable for high-power or renewable energy applications that need high step-up conversion with efficient operation. The induction motor is robust and low maintenance drive, so it mostly used in many applications.

REFERENCES

[1] Kuo-Ching Tseng and Chi-Chih Huang. High Step-Up High-Efficiency Interleaved Converter With Voltage Multiplier Module for Renewable Energy System, IEEE TRANSACTIONS ON INDUSTRIAL ELECTRONICS, VOL. 61, NO. 3, MARCH 2014.
[2]J. T. Bialasiewicz, "Renewable energy systems with photovoltaic powergenerators: Operation and modeling," IEEE Trans. Ind. Electron., vol. 55, no. 7, pp. 2752–2758, Jul. 2008.
[3] C. M. Lai, C. T. Pan, and M. C. Cheng, "High-efficiency modular highstep-up interleaved boost converter for DC-microgrid applications," IEEE Trans. Ind. Appl., vol. 48, no. 1, pp. 161–171, Jan./Feb. 2012.
[4]K. C. Tseng, C. C. Huang, and W. Y. Shih, "A high step-up converter with a voltage multiplier module for a photovoltaic system," IEEE Trans.Power Electron., vol. 28, no. 6, pp. 3047–3057, Jun. 2013.
[5] C. T. Pan and C. M. Lai, "A high-efficiency high step-up converter with low switch voltage stress for fuel-cell system applications," IEEE Trans. Ind. Electron., vol. 57, no. 6, pp. 1998–2006, Jun. 2010.
[6] Y. Zhao, X. Xiang, W. Li, X. He, and C. Xia, "Advanced symmetrical voltage quadrupler rectifiers for high step-up and high output-voltage converters," IEEE Trans. Power Electron., vol. 28, no. 4, pp. 1622–1631,Apr. 2013.
[7] R. J. Wai, C. Y. Lin, R. Y. Duan, and Y. R. Chang, "High efficiency DC–DC converter with high voltage gain and reduced switch stress," IEEE Trans. Ind. Electron., vol. 54, no. 1, pp. 354–364, Feb. 2007.
[8] T. J. Liang and K. C. Tseng, "Analysis of integrated boost–flyback stepup converter," Proc. Inst. Elect. Eng.—Elect. Power Appl., vol. 152, no. 2,pp. 217–225, Mar. 2005.
[9] S. M. Chen, T. J. Liang, L. S. Yang, and J. F. Chen, "A safety enhanced, high step-up DC–DC converter for AC photovoltaic module application," IEEE Trans. Power Electron., vol. 27, no. 4, pp. 1809–1817, Apr. 2012.
[10] L. S. Yang, T. J. Liang, and J. F. Chen, "Transformerless DC–DC converters with high step-up voltage gain," IEEE Trans. Ind. Electron., vol. 56, no. 8, pp. 3144–3152, Aug. 2009.
[11] Y. P. Hsieh, J. F. Chen, T. J. Liang, and L. S. Yang, "Novel high step-up DC–DC converter for distributed generation system," IEEE Trans. Ind.Electron., vol. 60, no. 4, pp. 1473–1482, Apr. 2013.
[12] Y. Jang and M. M. Jovanovic, "Interleaved boost converter with intrinsic voltage-doubler characteristic for universal-line PFC front end," IEEE Trans. Power Electron., vol. 22, no. 4, pp. 1394–1401, Jul. 2007.
[13] M. Prudente, L. L. Pfitscher, G. Emmendoerfer, E. F. Romaneli, and R. Gules, "Voltage multiplier cells applied to non-isolated DC–DC converters," IEEE Trans. Power Electron., vol. 23, no. 2, pp. 871–887, Mar. 2008.
[14] W. Li and X. He, "An interleaved winding-coupled boost converter with passive lossless clamp circuits," IEEE Trans. Power Electron., vol. 22, no. 4, pp. 1499–1507, Jul. 2007.
[15] W. Li and X. He, "Review of non isolated high-step-up DC/DC converters in photovoltaic grid-connected applications," IEEE Trans. Ind. Electron.,vol. 58, no. 4, pp. 1239–1250, Apr. 2011.
[16] L. S. Yang, T. J. Liang, and J. F. Chen, "Transformer less DC–DC converters with high step-up voltage gain," IEEE Trans. Ind. Electron., vol. 56, no. 8, pp. 3144–3152, Aug. 2009.

Chandana Nadella received her B.Tech degree in Electrical and Electronics Engineering from L.B.R.Collage of Engineering, Mylavaram, affiliated to JNTU, Kakinada in 2011. She is pursuing M.Tech in the department of Electrical and Electrical Engineering with specialization in Power Electronics and Electric Drives in Nova Engineering College, Ibrahimpatnam, A.P, India. His research interests include Power Electronic Converters and Drives.

©IJRASET 2015: All Rights are Reserved

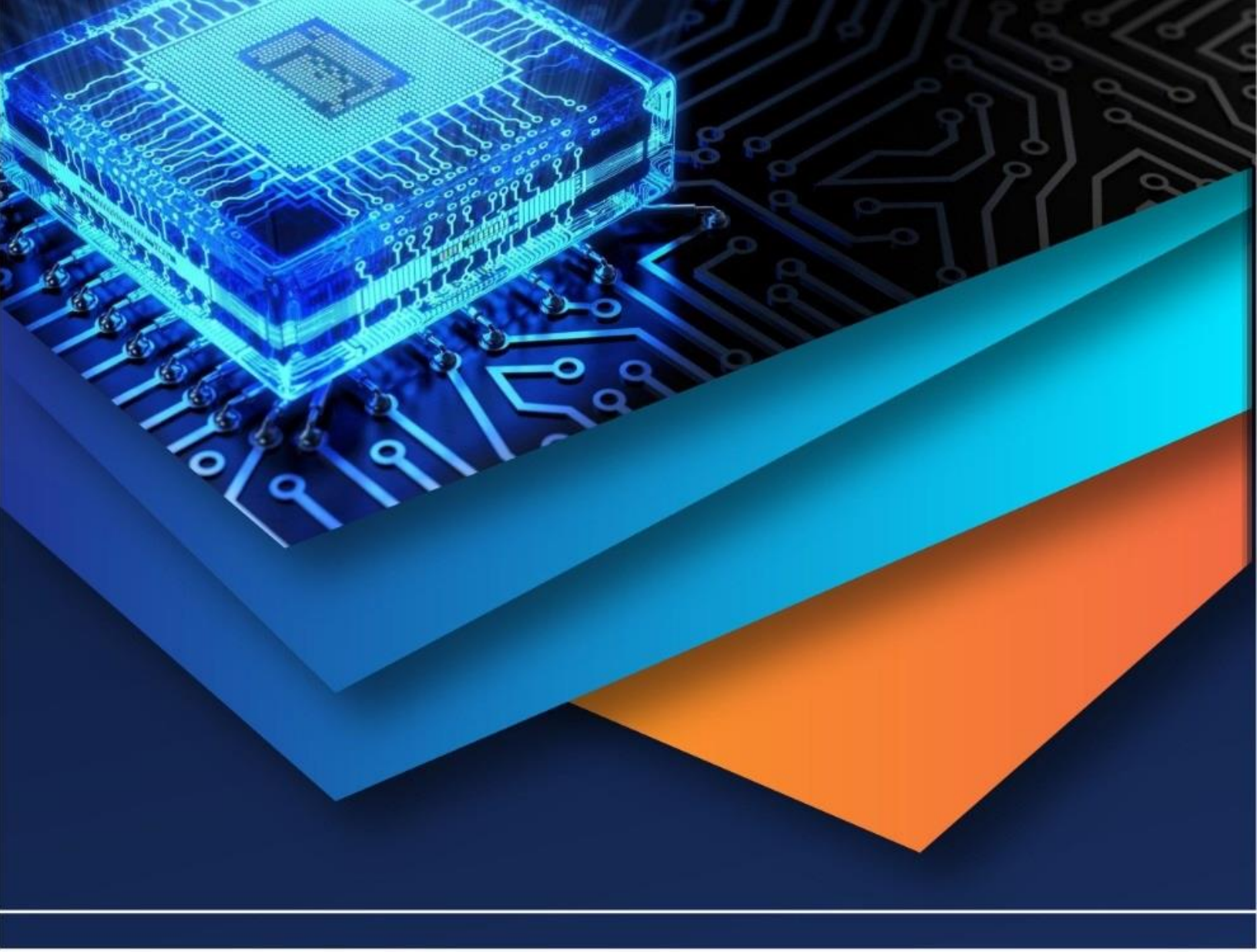

10.22214/IJRASET

45.98

IMPACT FACTOR: 7.129

IMPACT FACTOR: 7.429

INTERNATIONAL JOURNAL FOR RESEARCH

IN APPLIED SCIENCE & ENGINEERING TECHNOLOGY

Call : 08813907089 (24*7 Support on Whatsapp)