iJRASET
International Journal For Research in Applied Science and Engineering Technology



INTERNATIONAL JOURNAL FOR RESEARCH

IN APPLIED SCIENCE & ENGINEERING TECHNOLOGY

Volume: 4 **Issue:** VI **Month of publication:** June 2016

DOI:

www.ijraset.com

Call: 08813907089 | E-mail ID: ijraset@gmail.com

International Journal for Research in Applied Science & Engineering Technology (IJRASET)

PID Controller Tuning and Its Case Study

Smitha A B[1], Sachin C N Shetty [2], Bianca Baby[3]
[1](M.Tech in VLSI & Embedded Systems, Sahyadri college of Engineering and Management, India)
[2,3](Assistant Professor, Dept. Electronics and Communication Department, Sahyadri college of Engineering and Management, India)

Abstract ***This paper has been like to presents the Comparative study of Proportional (P), Proportional Integral (PI), and Proportional Integral Derivative (PID) controllers. The PID controller is one of the most commonly used dynamic control technique. Over 85% of all low level controllers are of the PID family. The purpose of this report is to provide a brief overview and advantage of using the PID controller rather than P and PI controllers. Different tuning methods include Manual Tuning Method, Ziegler-Nichols Method are used to get the stable output response. The parameters must be identified and tuned for the good performance Manual Tuning Method, Ziegler-Nichols Method***
Keywords Control system, Parameter, PID controller, Ziegler-Nichols Method

I. INTRODUCTION

The PID controller calculation includes three basic behavior, the Proportional, the Integral and the Derivative. These three behavior form the PID calculation. The proportional parameter determines the reaction to the current error, the integral parameter determines the reaction based on the sum of past errors and the derivative value determines the reaction based on the rate at which the error has been changing i.e. future error. The total sum of these three parameters is used to adjust the plant (object to be controlled) via a control element such as the position of a control valve or the temperature of a heating element. By tuning these three constants in the PID control system, the controller can provide control over the specific process requirements. The response of the controller can be described by using speed, accuracy and stability of the controller.

Some applications may use only one or two of the parameters to provide the appropriate control of the system. This is done by setting the gain of undesired control gain to zero. For example a PID controller can be used as PI, PD, P or I controller by setting the undesired control gain to zero. The three parameters of a PID controller must be tuned properly by using different tuning methods to obtain a desired closed loop system performance. In spite of their simplicity, they can be used to solve many complex calculations, especially when combined with different functional blocks, filters, selectors etc

II. PID ALGORITHM

A PID controller is a simple three-term controller.

The letters P, I and D stand for P – Proportional, I – Integral, D - Derivative

The transfer function of the basic form of PID controller is

$C(s) = K_P + K_I/S + K_D S$

$$= \frac{K_D S^2 + K_P S + K_I S}{S}$$

Where K_P = Proportional gain, K_I = Integral gain and K_D = Derivative gain.

Designing and tuning a Proportional Integral Derivative (PID) controller appears to be conceptually impulsive, but it is difficult in practice, if multiple objectives such as short transient response and high stability are to be achieved. PID controller has the good control dynamics including zero steady state error, short rise time, no oscillations and higher stability. The necessity of using a derivative gain component in addition to the PI controller is to remove the overshoot and the oscillations occurring in the output response of the system. The main advantages of the PID controller is that it can be used with higher order processes including more than single energy storage.

A typical structure of a PID control system is shown in Fig 1. The error signal e(t) is used to create the proportional, integral, and derivative actions, with the resulting signals weighted and added with the set point (SP) signal to form the control signal U(t)

©IJRASET: All Rights are Reserved

applied to the process model. Here the controller is used in a closed-loop unity feedback system. The variable e denotes the trailing error, which is sent to the PID controller. The control signal U(t) from the controller to the process is equal to the proportional gain (K_P) times the magnitude of the error, the integral gain (K_I) times the integral of the error and the derivative gain (K_D) times the derivative of the error.

Mathematically it is given as

$U(t)=K_Pe(t)+K_I\int e(t)dt+K_Dde(t)/dt$

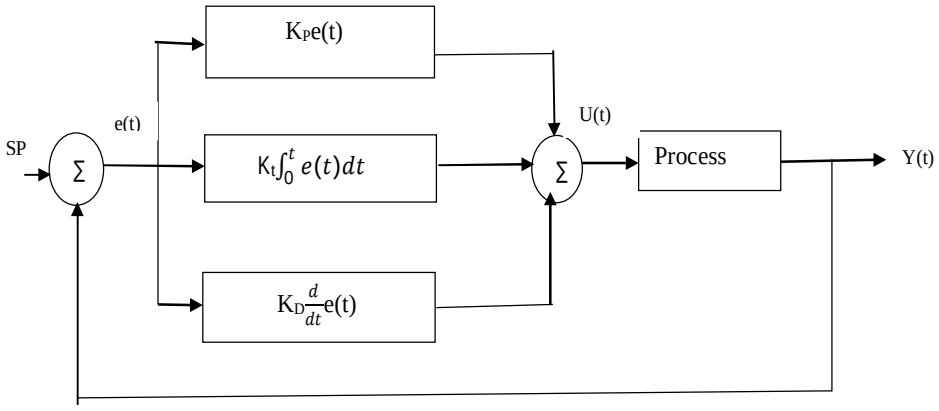

Fig 1: Block diagram of PID controller

Here the Set Point (SP) is the value at which the user is trying to control the Process Variable (PV). The Process Variable is the parameter being controlled.

Proportional term, called as Gain, makes a change to the output that is proportional to the current error value. The bigger the error signal (PV-SP), bigger the correction that will be made to handle the variable. Big gains can cause a system to become unstable. Low gains can cause the system to respond too slowly to system disturbances. The Integral, or Reset Term, collects the instantaneous error value over a defined period of time and provides corrections based on this collected error. The amount of correction is based on the Integral value. When used in coincidence with the Gain factor, the Integral value helps to drive toward the set point, removes steady-state error. Since the Integral value is based on past error values, it can cause overshoot of the present value. The rate of change of the error signal is the basis of the Derivative (or Rate) factor. The Derivative factor tends to decrease the rate of change of the process variable. This behavior feels to reduce the chances of overshoot due to the Integral factor.

In PID controller, the relation between PID parameters and the system response specifications is clear. Each part has its certain function as follows:

A. Proportion can increase the response speed and control accuracy of the system. Larger K_P can lead to faster response speed and higher control accuracy. But if K_P is too big, the overshoot will be large and the system will tend to be instable. Meanwhile, if K_P is too small, the control accuracy will be decreased and the regulating time will be prolonged. The static and dynamic performance will be deteriorated.

B. Integration is used to eliminate the steady-state error of the system. With bigger K_I, the steady-state error can be eliminated faster. But if K_I is too big, there will be integral saturation at the beginning of the control process and the overshoot will be large. On the other hand, if K_I is too small, the steady-state error will be very difficult to be eliminated and the control accuracy will be bad.

C. Differentiation can improve the dynamic performance of the system. It can prevent and predict the change of the error in any direction. But if K_D is too big, the response process will brake early, the regulating time will be prolonged and the anti-interference capability of the system will be bad.

The digital PID controller can be described by the following difference equation

©IJRASET: All Rights are Reserved

$u(k)=u(k-1)+z_0e(k)+z_1e(k-1)+z_2e(k-2)$

Where the coefficients z_0, z_1, and z_2 are evaluated by the expressions:

$$z_0 = K_C(1+T_D/T_S)$$

$$z_1 = -K_C(1+2T_D/T_S-T_S/T_I)$$

$$z_2 = K_CT_D/T_S$$

The K_C, T_I and T_D, are PID parameters for tuning, and T_S is the sampling period in seconds. There are several methods for evaluating the PID parameters, generally called PID tuning methods. When controlling time-invariant processes, the PID parameters can be constants and evaluated off-line, so, the PID architecture may use fixed values for the z_0, z_1 and z_2 coefficients. Otherwise, for time-variant processes there is a need to update those parameters; in this case the PID architecture has K_C, T_I and T_D as parameters that can be automatically updated during runtime by auto-tuning algorithms.

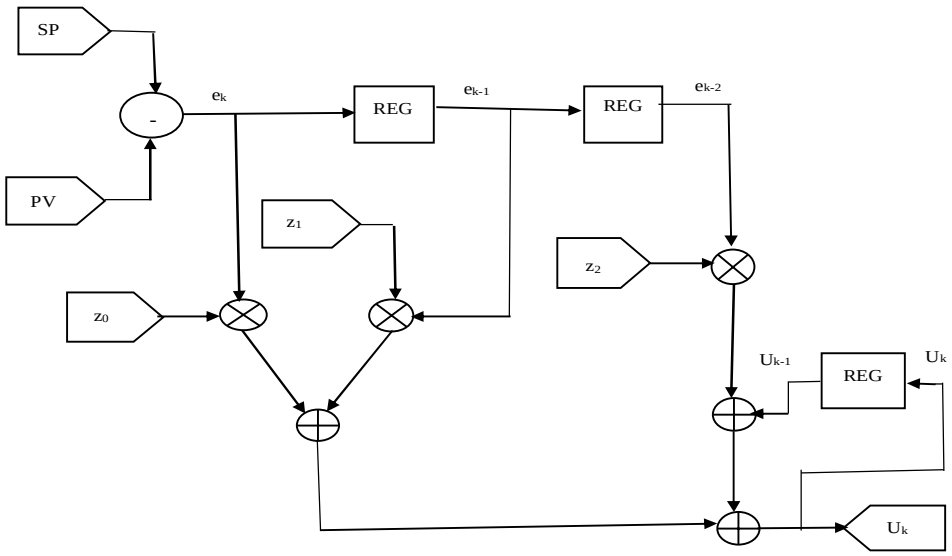

Fig 2: Architecture of PID controller

Figure 2 shows a simple PID architecture with the z_0, z_1 and z_2 coefficients. This architecture uses three adders, three multipliers and three registers. The arithmetic operations may have saturation behavior so that whenever the magnitude of the result of an operation is not represented by the output representation, the result outputted is the largest or the smallest represented value. A complete implementation of the PID controller with auto-tuning requires a component responsible for the auto-tuning algorithm, whose complexity depends on the auto-tuning algorithm used. The auto-tuning feature is required in most control systems for mobile robotics due to the changes that may occur in the environment and system. Those modifications usually need the retuning of parameters to still have a stable control system with acceptable performance criteria.

III. PID CONTROLLER PARAMETER AND IDENTIFICATION

Problem of identification of PID controller arises when parameters of an existing controller have to be tuned. Controller parameters have to be manually tuned if they are changed with time or because process parameters have changed so the controller does not perform satisfactory anymore.

©IJRASET: All Rights are Reserved

Parameter	Speed of Response	stability	accuracy
Increase K_P	Increases	Drops	Improves
Increase K_I	Decreases	Drops	Improves
Increase K_D	Increases	Improves	No impact

Table 1 Rules for tuning PID controller parameters

Identification can be performed experimentally using a certain type of reference signal on the controller input i.e. y(t) and measuring response on the controller output U(t).

Identification of the controller Proportional gain K_P

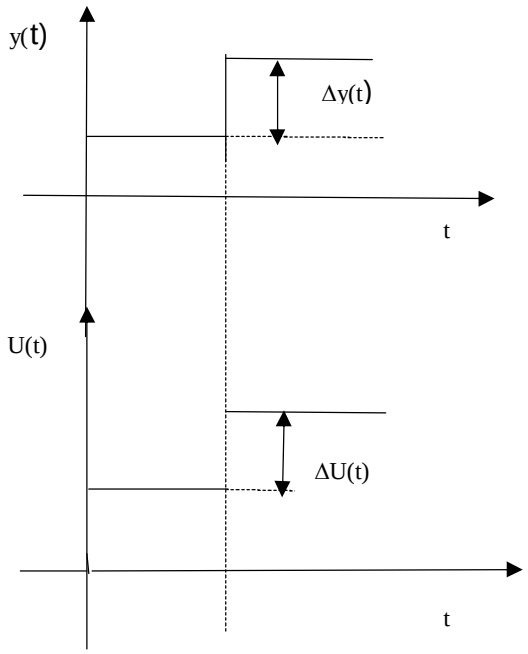

Fig 3.P controller response on step input

Proportional gain of the controller can be measured form transfer function of proportional channel of the controller. In order to that one should disconnect derivative and integral channel, or, if that is not possible one should set T_D on zero and T_I on very large value. In that way the PID controller is reduced to P controller only. From the Fig 3 the response of such P controller it is possible to compute the proportional gain of the controller.

$K_P = \Delta u/\Delta y$

Identification of PID controller integral time constant T_I

Integral time constant of the controller can be determined from the PI controller response by setting T_D to zero. From the response given in Fig 4 the integral time constant is determined as

$T_I = K_P(\Delta y/\Delta u)\Delta t$

©IJRASET: All Rights are Reserved

Volume 4 Issue VI, June 2016
ISSN: 2321-9653
International Journal for Research in Applied Science & Engineering Technology (IJRASET)

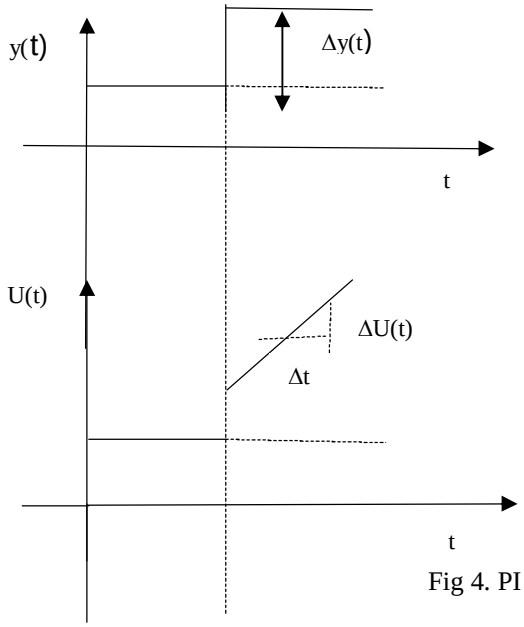

Fig 4. PI controller response on step input

Identification of PID controller derivative time constant T_D

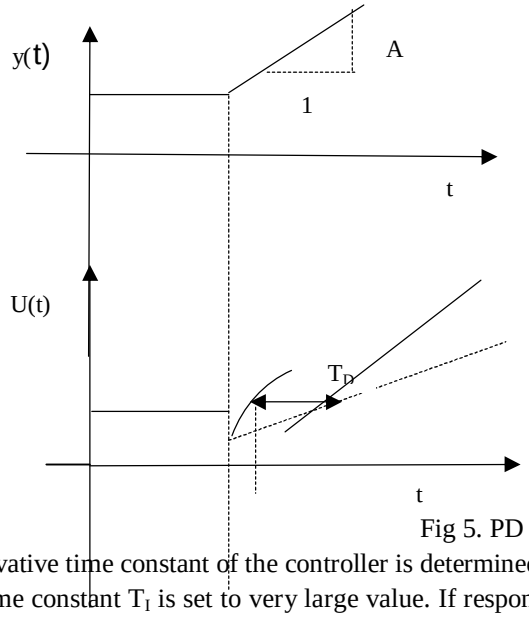

Fig 5. PD controller response on ramp input

Derivative time constant of the controller is determined from PD controller response on ramp input. Integral channel is disconnected or time constant T_I is set to very large value. If responses of P and PD controller on ramp signal e(t) = A*t are compared, it can be seen that response for P controller is given as:

$U_P(t) = K_P e(t) = K_P A*t$

The only difference in response is that PD controller gives value of control signal T_D seconds before P controller. From the response on the ramp input shown in Fig 5 it is possible to measure time constant T_D.

Identification of PID controller topology

In order to identify PID controller topology it should work with all modes active. Then from the step response of PID controller shown in Fig 6 can be determined PID controller topology.

©IJRASET: All Rights are Reserved

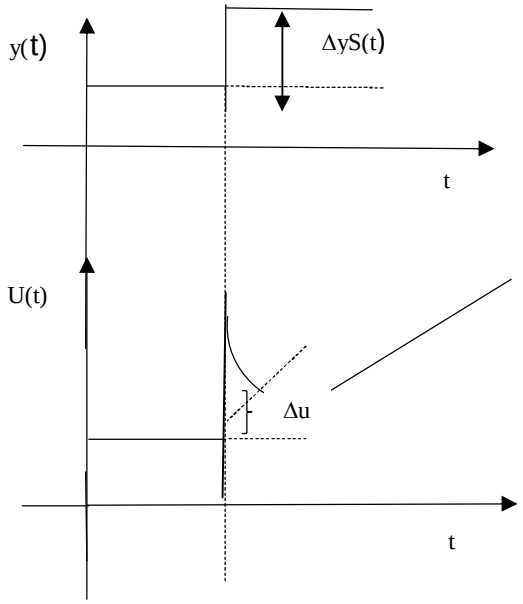

Fig 6. Step response of PID controller

The structure of the controller can be determined from the ratio $\Delta u/\Delta y$. If $\Delta u/\Delta y = K_P$ then structure of the controller is parallel and if $\Delta u/\Delta y = K_P(1+T_D/T_I)$ then structure of the controller is serial.

IV. LOOP TUNING

Tuning a control loop is arranging the control parameters to their optimum values in order to obtain desired control response. At this instant, stability is the main factor, but beyond that, different systems leads to different behaviors and requirements and these might not be compatible with each other. Theoretically, PID tuning seems completely easy, consisting of only 3 parameters, but, practically; it is a difficult problem because the complex criteria at the PID limit should be satisfied. PID tuning is mostly an abstractive concept but existence of many objectives to be met such as short transient, high stability makes this process harder. For example sometimes, systems might have nonlinearity problem which means that while the parameters works properly for full load conditions, they might not work as effective for no load conditions. Also, if the PID parameters are chosen wrong, control process input might be unstable, with or without oscillation; output diverges until it reaches to saturation or mechanical breakage. For a system to operate properly, the output should be stable, and the process should not oscillate in any condition of set point or disturbance.

In today's control industrial applications, PID is used over 95% of the control loops. Actually if there is control, there is PID, in analog or digital forms. In order to achieve optimum solutions K_P, K_I and K_D gains are arranged according to the system characteristics. There are many tuning methods, but most common methods are as follows:

A. Manual Tuning Method

Manual tuning is achieved by arranging the parameters according to the system response. Until the desired system response is obtained K_I, K_P and K_D are changed by observing system behavior.

Example (for no system oscillation): First lower the derivative and integral value to 0 and raise the proportional value 100. Then increase the integral value to 100 and slowly lower the integral value and observe the system's response. Since the system will be maintained around set point, change set point and verify if system corrects in an acceptable amount of time. If not acceptable or for a quick response, continue lowering the integral value. If the system begins to oscillate again, record the integral value and raise value to 100. After raising the integral value to 100, return to the proportional value and raise this value until oscillation ceases. Finally, lower the proportional value back to 100 and then lower the integral value slowly to a value that is 10% to 20% higher than the recorded value when oscillation started. Although manual tuning method seems simple it requires a lot of time and experience.

©IJRASET: All Rights are Reserved

B. Ziegler-Nichols Method

Ziegler-Nichols Method is one of the most effective methods that increase the usage of PID controllers. Firstly, it is checked that whether the desired proportional control gain is positive or negative. For this, step input is manually increased a little, if the steady state output increases, the proportional control gain is positive, otherwise; it is negative. Then, K_I and K_D are set to zero and only K_P value is increased until it creates a periodic oscillation at the output response. This critical K_P value is attained to be ultimate gain, K_C and the period where the oscillation occurs is named as P_C "ultimate period. As a result, the whole process depends on two variables and the other control parameters are calculated according to the table given below.

Control Type	K_P	K_I	K_D
P	$0.5*K_C$	0	0
PI	$0.45*K_C$	$1.2*K_P/P_C$	0
PID	$0.6*K_C$	$2*K_P/P_C$	$K_P*P_C/8$

Table 2. Ziegler-Nichols PID controller tuning method, adjusting K_P, K_I and K_D

Parameter	Rise time	Overshoot	Setting time	Steady state error	Stability
Increasing K_P	Decreases	Increases	Small increase	Decreases	Degrade
Increasing K_I	Small decrease	Increases	Increases	Large decrease	Degrade
Increasing K_P	Small decrease	Decreases	Decreases	Minor change	Improve

Table 3. Effects of independent P I and D tuning

The PID parameters affect the system dynamic. Four major characteristics of the closed-loop step response are evaluated:

1) *Rise time:* - The time it takes for the control system output y to rise beyond 90% of the desired level for the first time.
2) *Overshoot:* - How much the peak level is higher than the steady state, normalized against the steady state.
3) *Settling time:* - The time it takes for the system to converge to its steady state.
4) *Steady-state error:* - The difference between the steady-state output and the desired output.

V. CONCLUSION

PID is a simple entity and broadly used in many of the industrial applications. PID controller has developed response after tuned properly. Various tuning methods can be proposed and used for the tuning of PID controller. The best values of PID constants are preferable for smooth control action. By tuning the three constants in the PID algorithm, the controller can provide control action fashioned for unique process requirements. The response of the controller can be represented in terms of rise time, overshoot, settling time, degree of oscillation, steady state error. Some activities may require using only one or two of the parameters to provide the better control of the system. This is achieved by setting the gain of undesired control outputs to zero. A PID controller will be called a PI, PD, P or I controller in the absence of the respective control actions. PI controllers are particularly common, since derivative action is very delicate to quantitative analysis of noise, and the absence of an integral value may protect the system from reaching its target value due to control action.

REFERENCES

[1] Shumit Saha, Md. Jahiruzzaman, Chandan Saha, Md. Rubel Hosen, Atiq Mahmud "Implementation of Modified Type-C PID Control System" 2nd Int'l Conf. on Electrical Engineering and Information & Communication Technology (ICEEICT) 2015 Iahangirnagar University, Dhaka-I 342, Bangladesh, 21-23 May 2015

[2] A. Trimeche, A. Sakly, A. Mtibaa, and M. Benrejeb, "PID control implementation using FPGA technology," 3'd International Conference on Design and Test Workshop, pp. 1-4,2008.

[3] L. Qu, Y. Huang, L. Ling, "Design and implementation of intelligent PID controller based on FPGA," IEEE 41h International Conference on Natural Computation, pp. 511-515,2008.

[4] J. Lima, R. Menotti, 1. M. P. Cardoso, and E. Marques, "A methodology to design FPGA based PID controllers," IEEE Conference on Systems, Man, and

©IJRASET: All Rights are Reserved

Cybernetics, pp. 2577-2583, 2006.
[5] H. D. Maheshappa, R. D. Samuel, A. Prakashan, "Digital PID controller for speed control of DC motors", IETE Technical Review Journal, V6, N3, PP171!176, India 1989
[6] J. C. Basilio and S. R. Matos "Design of PI and PID Controllers With Transient Performance Specification" IEEE TRANSACTIONS ON EDUCATION, VOL. 45, NO. 4, NOVEMBER 2002

©IJRASET: All Rights are Reserved

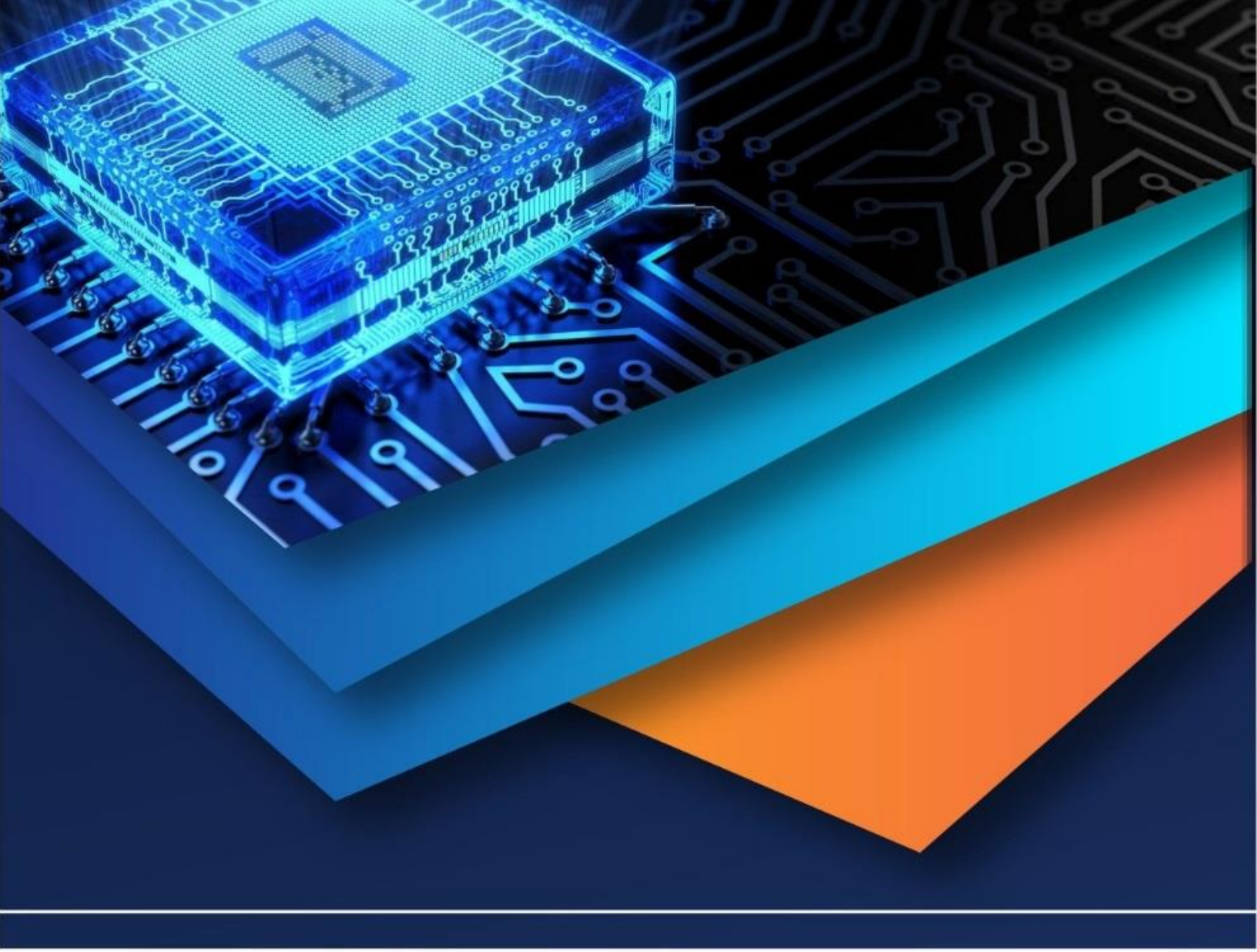

10.22214/IJRASET

45.98

IMPACT FACTOR: 7.129

IMPACT FACTOR: 7.429

INTERNATIONAL JOURNAL FOR RESEARCH

IN APPLIED SCIENCE & ENGINEERING TECHNOLOGY

Call : 08813907089 (24*7 Support on Whatsapp)