iJRASET
International Journal For Research in
Applied Science and Engineering Technology

INTERNATIONAL JOURNAL FOR RESEARCH

IN APPLIED SCIENCE & ENGINEERING TECHNOLOGY

Volume: 4 **Issue:** VI **Month of publication:** June 2016

DOI:

www.ijraset.com

Call: 08813907089 | E-mail ID: ijraset@gmail.com

Volume 4 Issue VI, June 2016
ISSN: 2321-9653
International Journal for Research in Applied Science & Engineering Technology (IJRASET)

Design and Optimization of RCC Silo

Afzal Ansari[1], Kashif Armaghan[2], Sachin S. Kulkarni[3]
[1,2]B.E Students, Department of Civil Engineering, Secab Institute of Engineering & Technology, Vijayapur
[3]Assistant Professor, Department of Civil Engineering, Secab Institute of Engineering & Technology, Vijayapur

Abstract— RCC Silos are used by a wide range of industries to store bulk solids in quantities ranging from a few tones to hundreds or thousands of tones. The term silo includes all forms of particulate solids storage structure that might otherwise be referred to as a bin, hopper, grain tank or bunker. Silos are very demanding in cement industries. Hence RCC silos are widely used for storage of granular materials as they are an ideal structural material for the building of permanent bulk-storage facilities for dry granular like fillings. Initially concrete storage units are economical in design and reasonable in cost. Concrete can offer the protection to the stored materials, requires little maintenance, is aesthetically pleasing, and is relatively free of certain structural hazards such as buckling or denting.

In order to study the most economical configuration of silos to store a given volume of a material, twenty eight samples of silos have been designed by changing the ratio of height to diameter for storing a given material, namely, bituminous coal. In this investigation, for volume of 125m^3, the diameter to height ratio is varied and has been designed and finally, the most economical size is found out. This method is carried out for volume of 125m^3. All the designs have been based on the recommendations of I.S 4995 -1974 (part 1&2) "Criteria For Design Of Reinforced Concrete Bins For The Storage Of Granular And Powdery Materials" and I.S 456 – 2000 codes. Based on these designs, those dimensions of silos which will lead to least amount of concrete, steel and total cost to store a given amount of material have been found out. These findings will be useful for the designers of silos.

I. INTRODUCTION

Silo has been used to store bulk solids (such as cement, coal, bitumen, etc) in industries. The quantity may range from few tones to over one hundred thousand tones. Shallow bins are usually called as bunkers and deep bins are usually called as silos. If the plane of rupture of material stored meets the top horizontal surface. The common name for silos is bins. The bins are used to store large quantities of materials like grains, coals etc. R.C.C. bins are preferred to steel bins, since maintenance cost of R.C.C. bins is less. The bunkers may be termed as shallow bins and silos as deep bins. Silos may be circular or rectangular in shape. The bins are always provided with hopper bottoms. The slope of hopper bottoms with horizontal is kept more than angle of friction between the grain stored and concrete so that when bottom door is opened the material starts rolling down on its own weight. The bins are supported on a number of columns spaced at regular intervals. The distance between two adjacent columns and the height of the columns should be sufficient for a truck to pass, so that they can be directly loaded with the material stored when hopper bottom is opened. The various part of the silos to be designed are vertical cylindrical walls, hopper bottom and edge beams.

II. OBJECTIVES

A. To analyse, design and optimize a silo for storage of coal.
B. To carry out cost calculation and identify the optimised silo for construction.
C. To develop an excel program to optimize silos for storing coal.
D. The main objective is to identify the most economical size of silo to store for a given volume of material.

III. METHODOLOGY

A formula sheet has been developed for the design of silo. All the designs have been based on the recommendations of I.S. 4995-1974 and I.S. 456-2000 codes. Estimation of cost of silos are done.

IV. IS GUIDELINES & PROBLEM DEFINITION

All the designs have been based on the recommendations of IS 4995-1974 (Part 1 & 2) "Criteria for design of reinforced concrete bins for the storage of granular and powdery materials" and IS 456-2000 code.

Various dimensions of silos are chosen as per volume requirement and are designed. Steel quantity is found out from "Bar bending schedule" and concrete quantity is also found out separately. The total cost is then calculated to obtain economical dimension.

©IJRASET: All Rights Reserved

Volume 4 Issue VI, June 2016
ISSN: 2321-9653
International Journal for Research in Applied Science & Engineering Technology (IJRASET)

V. ECONOMIC CONSIDERATIONS

Dimensions and layout of the bins, etc shall be so arrived as to effect optimum economies, the details of which are given below. In addition, the material handling facilities shall also be considered.

DIMENSIONS - Volume of each bin and height to diameter ratio shall be governed by its storage and functional requirements of materials. To achieve a reduction in lateral pressure over a larger height, it may be preferable to select a height/diameter ratio greater than or equal to two.

LAYOUT - Storage bins may be either free standing individual bins or arranged in the form of batteries of free standing bins or bins interconnected in one or both the directions.

A. Volume of Silos

Weight of coal considered = 100 tonnes
Density of coal = 8KN/ m^3
Volume of coal = 125 m^3

TABLE 1
VOLUME OF SILOS

Height of cylindrical portion (m)	Top dia. (m)	Height of Frustrum cone (m)	Bottom dia. of hopper (m)	Volume of cylindrical portion (m^3)	Volume of frustrum cone (m^3)	Total volume (m^3)	Structure
19.90	2.80	1.15	0.5	122.535	2.857	125.392	SILO
19.20	2.85	1.18	0.5	122.484	3.014	125.498	SILO
18.50	2.90	1.20	0.5	122.196	3.176	125.372	SILO
17.80	2.95	1.23	0.5	121.662	3.344	125.006	SILO
17.20	3.00	1.25	0.5	121.580	3.518	125.098	SILO
16.70	3.05	1.28	0.5	122.013	3.698	125.711	SILO
16.10	3.10	1.30	0.5	121.518	3.883	125.401	SILO
15.60	3.15	1.33	0.5	121.573	4.075	125.648	SILO
15.10	3.20	1.35	0.5	121.441	4.273	125.714	SILO
14.60	3.25	1.38	0.5	121.118	4.477	125.595	SILO
14.10	3.30	1.40	0.5	120.597	4.688	125.285	SILO
13.70	3.35	1.43	0.5	120.754	4.905	125.658	SILO
13.25	3.40	1.45	0.5	120.299	5.129	125.428	SILO
12.80	3.45	1.48	0.5	119.657	5.359	125.016	SILO
12.50	3.50	1.50	0.5	120.264	5.596	125.860	SILO
12.10	3.55	1.53	0.5	119.766	5.840	125.606	SILO
11.70	3.60	1.55	0.5	119.091	6.091	125.182	SILO
11.40	3.65	1.58	0.5	119.284	6.349	125.632	SILO
11.10	3.70	1.60	0.5	119.348	6.614	125.962	SILO
10.70	3.75	1.63	0.5	118.178	6.887	125.064	SILO
10.40	3.80	1.65	0.5	117.948	7.166	125.114	SILO
10.10	3.85	1.68	0.5	117.580	7.454	125.033	SILO
9.60	3.95	1.73	0.5	117.640	8.051	125.691	SILO
9.30	4.00	1.75	0.5	116.867	8.361	125.228	SILO
9.10	4.05	1.78	0.5	117.231	8.679	125.910	SILO

©IJRASET: All Rights Reserved

Volume 4 Issue VI, June 2016
ISSN: 2321-9653

8.80	4.10	1.80	0.5	116.182	9.005	125.188	SILO
8.60	4.15	1.83	0.5	116.328	9.339	125.668	SILO
8.35	4.20	1.85	0.5	115.684	9.682	125.366	SILO

VI. DESIGN EXAMPLE

A. *Data*

Diameter of silo(D) = 4.2m
Height of cylindrical portion = 8.35m
Depth of hopper bottom = 1.85m
Diameter of opening = 0.5m
Density of coal (w) = 8 KN/m^3
Density of RCC (D_c) = 25 KN/m^3
The ratio of horizontal to vertical pressure intensity (μ') = 0.6
Angle of repose (Ø) = 35°
Typical of reinforcement = 415 HYSD bars
Grade of concrete = M20
Wall thickness provided = 120mm

B. *Characteristic strength*

f_{ck} = 20 N/mm^2
fy = 415 N/mm^2
m = modular ratio = 13

C. *Design of cylindrical walls*

Using Janssen's Theory:

Horizontal Pressure (P_h) = $\frac{wR}{\mu'} \; x \; \left(1 - exp^{\left(\frac{-\mu' nh}{R}\right)}\right)$

Where,
n = 0.271
R = 1.050

Depth from top, h (m)	Horizontal pressure, P_h (KN/m^2)
5	7.546
8.35	10.159
10.2	11.116

Hoop tension in cylindrical wall per mtr height (F_t) = 0.5 P_hD
= 0.5 x 11.116 x 4.2
= 23.343 KN

Design ultimate hoop tension = 1.5 x F_t
=1.5 x 23.343
= 35.015 KN

Area of hoop reinforcement (A_{st}) = $\frac{Ft \, x \, 1000}{0.87 \, x \, f_y}$
= $\frac{23.343 \, x \, 1000}{0.87 \, x \, 415}$
= 96.98 mm^2

©IJRASET: All Rights are Reserved

Volume 4 Issue VI, June 2016
ISSN: 2321-9653

But,

A_{st} minimum = 0.12% bD

$= \frac{0.12 \times 1000 \times 0.12}{100} = 144 \text{ mm}^2$

Use 8mm hoops at 300mm centre to centre (A_{st}= A_{st} minimum)

Thus, A_{st} provided $= \frac{a_{st} \times 1000}{Spacing}$

$= \frac{50.26 \times 1000}{300}$

$= 167.552 \text{ mm}^2$

Assuming 120mm thick cylindrical walls, the tensile stresses developed in concrete under working hoop tension should be limited to the values specified in clause: B- 2.1.1 of I.S. 456-2000.

Tensile stress in concrete $= \frac{F_t}{A_c + m \times A_{st}}$

$= \frac{23.343}{(120 \times 1000) + 13 \times 167.552}$

$= 0.191 < \sigma_{cbc} = 2.8 \text{ N/mm}^2$

Design of vertical reinforcement:

A_{st} minimum = 0.12% bD

$= \frac{0.12 \times 1000 \times 0.12}{100} = 144 \text{ mm}^2$

Use 8mm hoops at 300mm centre to centre (A_{st}= A_{st} minimum)

D. Design of hopper bottom

Provide a sloping slab of 120mm thick with 30mm lining.

Total thickness = 120+30

= 150mm

Surcahrge load on hopper bottom per meter =[wh-$\frac{4Ph\mu'}{D}$]

$=[8x8.35-\frac{4x10.159x0.6}{4.2}]$

= 60.995 KN

Weight of sloping bottom

$= \left(\pi \, x \frac{(D_1+D_2)}{2} + total\ wall\ thickness\ x \sqrt{2}\right) x total\ wall\ thickness\ x \sqrt{2} x\ D_c$

$= \left(3.1415\ x \frac{(4.2+0.5)}{2} + 0.15\ x \sqrt{2}\right) x\ 0.15\ x \sqrt{2}\ x\ 25$

= 42.68 KN

Total load = 60.995+42.680

= 103.675 KN

Factored load = 1.5 x 130.675

= 155.513 KN

Mean diameter at centre of sloping slab $= \frac{(D_1+D_2)}{2}$

$= \frac{(4.2+0.5)}{2} = 2.35$ m

T_u= Ultimate tension per meter run $= \frac{1.5x\ 103.675}{\pi\ x\ 2.35}\ x\ Cosec\ 45° = 19.857$ KN

Reinforcement for direct tension $= \frac{Ft\ x\ 1000}{0.87\ x\ f_y}$

$= \frac{19.857\ x\ 1000}{0.87\ x\ 415}$

$= 54.997 \text{ mm}^2$

©IJRASET: All Rights are Reserved

Volume 4 Issue VI, June 2016
ISSN: 2321-9653

A_{st} minimum = 0.12% bD

$$= \frac{0.12 \times 1000 \times 0.12}{100} = 144 \text{ mm}^2$$

Use 8mm hoops at 300mm centre to centre (A_{st}= A_{st} minimum)

Surcharge pressure on hopper bottom = $\frac{Surcharge\ load\ on\ hopper\ bottom}{\pi \times D^2}$

$$= \frac{60.995}{3.1415 \times 4.2^2}$$

$$= 1.101 \text{ KN/m}^2$$

Maximum horizontal pressure (P_h) = 11.11 KN/m^2

Normal pressure intensity, (P_n) = 1.35 x Cos$^2\theta$ + P_h Sin$^2\theta$

= 1.35 x Cos^{2}45° + 11.116 x Sin^{2}45°

= 6.108 KN/m^2

Normal Component due to self weight of sloping slab = total wall thickness x D_c x Cos θ

= 0.15 x 25 x Cos 45°

= 2.651 KN/m^2

Total normal Pressure (P) = P_n+ total wall thickness x D_c x Cos θ

= 6.108 + 2.651

= 8.760 KN/m^2

Mean dia. of sloping slab = $\frac{(D_1+D_2)}{2} + total\ wall\ thickness \times \sqrt{2}$

$$= \frac{(4.2+0.5)}{2} + 1.5 \times \sqrt{2}$$

= 2.562 m

Hoop tension per meter = *0.5 x P x Mean dia.*

= 0.5 x 8.760 x 2.562

= 11.221 KN

Ultimate hoop tension per meter = 1.5 x 11.221

= 16.832 KN

Area of hoop reinforcement (A_{st}) = $\frac{16.832 \times 1000}{0.87 \times f_y}$

$$= \frac{16.832 \times 1000}{0.87 \times 415}$$

= 46.620 mm^2

A_{st} minimum = 0.12% bD

$$= \frac{0.12 \times 1000 \times 0.12}{100} = 144 \text{ mm}^2$$

Use 8mm hoops at 300mm centre to centre (A_{st}= A_{st} minimum)

E. Edge Beam

At the junction of cylindrical wall and hopper bottom at the top of silo, edge beam of size **300mm x 300mm** with 4 bars of 12mm diameter are provided to increase the rigidity of the structure.

©IJRASET: All Rights are Reserved

Volume 4 Issue VI, June 2016
ISSN: 2321-9653

F. Bar Bending Schedule

TABLE 2
BAR BENDING SCHEDULE

Bar Mark	Shape of bar	No. of Bars (No's)	Dia. of Bar (mm)	Length of bar (m)	Unit weight of bar (Kg/m)	Total Weight (Kg)
A	Vertical	46	8	8.300	0.395	150.835
B	Circular	29	8	13.934	0.395	159.640
EB	Circular	4	12	14.437	0.889	102.661
C	Sloping	48	8	2.666	0.395	50.561
D1	Sloping circular	1	8	14.123	0.395	5.579
D2	"	1	8	11.810	0.395	4.666
D3	"	1	8	9.925	0.395	3.921
D4	"	1	8	8.040	0.395	3.176
D5	"	1	8	6.155	0.395	2.432
D6	"	1	8	4.270	0.395	1.687
D7	"	1	8	2.385	0.395	0.942
E	Circular	4	12	2.513	0.889	8.936
Stirrups in EB	Square	46	10	1.600	0.617	45.432
Stirrups in E	Square	7	10	1.600	0.617	6.914
Total				98.558		592.814

©IJRASET: All Rights Reserved

Volume 4 Issue VI, June 2016
ISSN: 2321-9653
International Journal for Research in Applied Science & Engineering Technology (IJRASET)

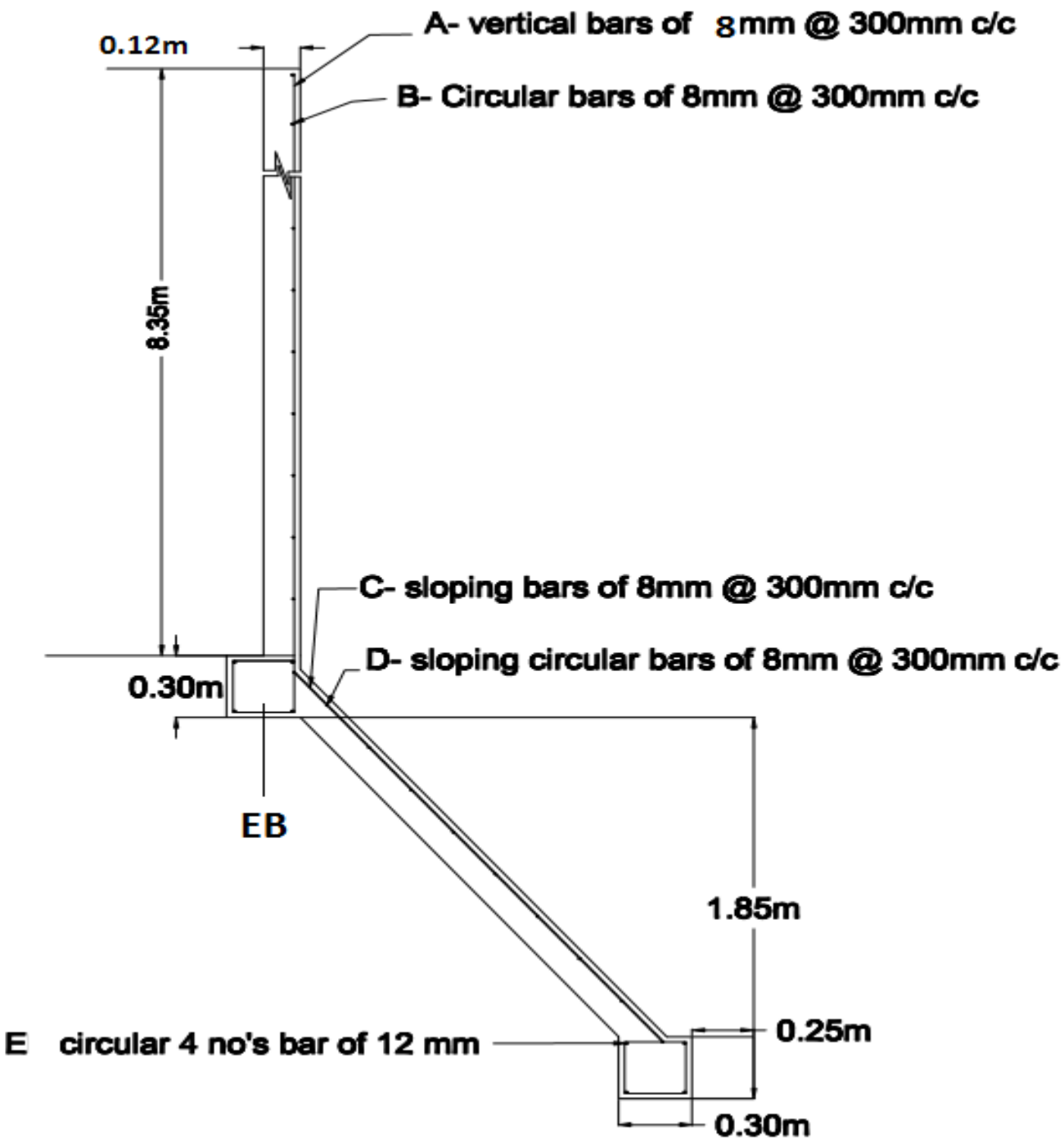

Fig. 2 Cross section of RCC silo

©IJRASET: All Rights Reserved

Volume 4 Issue VI, June 2016
ISSN: 2321-9653
International Journal for Research in Applied Science & Engineering Technology (IJRASET)

G. Cost comparison of R.C.C. Silo with various H/D ratio

TABLE 3
ABSTRACT SHEET WITH H/D RATIO

Height of Cylindrical Portion (m)	Top dia. of Cylindrical Portion (m)	H/D ratio	Volume of concrete (m^3)	Rate per Unit	Cost (INR)	Weight of Steel (Kg)	Rate per unit	Cost (INR)	Total Cost (INR)
19.90	2.80	7.11	22.756	6000	136536.00	680.689	40	27227.56	163763.56
19.20	2.85	6.74	22.378	6000	134268.00	676.288	40	27051.52	161319.52
18.50	2.90	6.38	21.974	6000	131844.00	668.305	40	26732.20	158576.20
17.80	2.95	6.03	21.544	6000	129264.00	664.435	40	26577.40	155841.40
17.20	3.00	5.73	21.206	6000	127236.00	657.025	40	26281.00	153517.00
16.70	3.05	5.48	20.965	6000	125790.00	655.300	40	26212.00	152002.00
16.10	3.10	5.19	20.585	6000	123510.00	646.466	40	25858.64	149368.64
15.60	3.15	4.95	20.305	6000	121830.00	643.655	40	25746.20	147576.20
15.10	3.20	4.72	20.008	6000	120048.00	639.748	40	25589.92	145637.92
14.60	3.25	4.49	19.691	6000	118146.00	635.952	40	25438.08	143584.08
14.10	3.30	4.27	19.357	6000	116142.00	627.163	40	25086.52	141228.52
13.70	3.35	4.09	19.135	6000	114810.00	610.175	40	24407.00	139217.00
13.25	3.40	3.90	18.832	6000	112992.00	624.068	40	24962.72	137954.72
12.80	3.45	3.71	18.513	6000	111078.00	619.123	40	24764.92	135842.92
12.50	3.50	3.57	18.382	6000	110292.00	616.799	40	24671.96	134963.96
12.10	3.55	3.41	18.102	6000	108612.00	616.507	40	24660.28	133272.28
11.70	3.60	3.25	17.807	6000	106842.00	607.529	40	24301.16	131143.16
11.40	3.65	3.12	17.64	6000	105840.00	608.074	40	24322.96	130162.96
11.10	3.70	3.00	17.462	6000	104772.00	604.983	40	24199.32	128971.32
10.70	3.75	2.85	17.127	6000	102762.00	603.347	40	24133.88	126895.88
10.40	3.80	2.74	16.926	6000	101556.00	603.991	40	24159.64	125715.64
10.10	3.85	2.62	16.714	6000	100284.00	599.284	40	23971.36	124255.36
9.60	3.95	2.43	16.41	6000	98460.00	597.982	40	23919.28	122379.28
9.30	4.00	2.33	16.167	6000	97002.**00**	595.511	40	23820.44	120822.44
9.10	4.05	2.25	16.071	6000	96426.00	599.187	40	23967.48	120393.48
8.80	4.10	2.15	15.808	6000	94848.00	597.253	40	23890.12	118738.12
8.60	4.15	2.07	15.696	6000	94176.00	594.361	40	23774.44	117950.44
8.35	4.20	1.99	15.495	6000	92970.00	592.812	40	23712.48	116682.48

©IJRASET: All Rights are Reserved

Volume 4 Issue VI, June 2016
ISSN: 2321-9653
International Journal for Research in Applied Science & Engineering Technology (IJRASET)

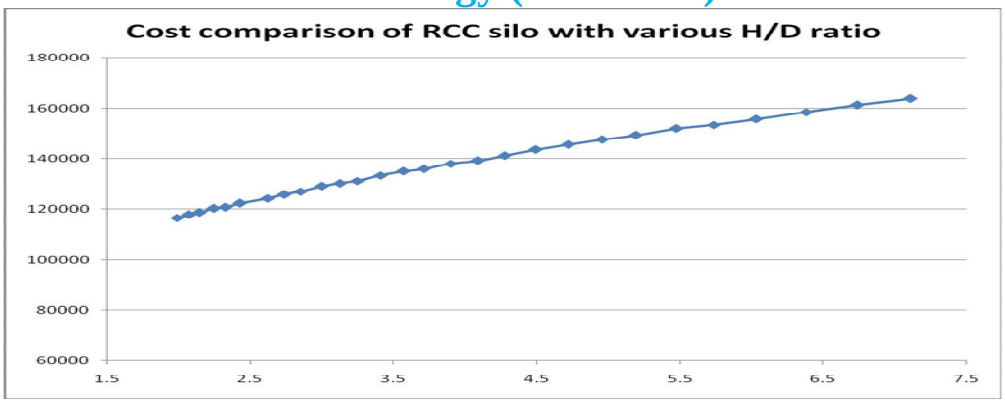

X-axis: H/D ratio
Y-axis: Total cost in INR

Fig. 1 Cost comparison of R.C.C. Silo with various H/D ratio

In the above graph, H/D ratio and Total cost in INR are taken in x and y axis respectively. The most economical silo has been found to the dimension of height: 8.35m. and diameter: 4.2m. The total cost required for economical silo is Rs. 116682.48 and for un-economical one is Rs. 163763.56. It is found that the requirement of cost for construction of silo is directly proportional to height and inversely proportional to that of diameter.

VII. CONCLUSION

From the above graph it is concluded that for storing bituminous coal for $100m^3$ volume, the H/D ratio of 1.99 is found to be most economical. As the ratio of H/D increases the total cost of construction of the storage structure also increases. It is concluded that, increasing diameter facilitates the high cost and vice versa and increasing the height of silo, the cost can be reduced.

REFERENCES

[1] "N.Krishna Raju", Advanced Reinforced Concrete Structures, New age international (P) Limited, Publishers.
[2] "S.S. Bhavikatti", Advance R.C.C. Design, CBS publishers & distributers.
[3] IS:4995(Part1)-1974 (Criteria for design of Reinforced Concrete Bins for storage of Granular and Powdery Materials).
[4] IS:4995(Part2)-1974 (Criteria for design of Reinforced Concrete Bins for storage of Granular and Powdery Materials).
[5] IS:456-2000(Code of Practice for Plain and Reinforced Concrete).
[6] S S Safarian and E C Harris (1985), Design and construction of silo and bunkers, Van Nostrand Reinhold company Inc., USA,p 290.
[7] N.Karthiga Shenbagam, Mahesh Loganayagan, S,N.V.Manjunath, A.S.Rmesh, "Studies on Economical design of bunkers", International Journal of Advance Research in Computer Science and Software Engineering.
[8] Ramakrishna Vemula and Kvenkateswararao, "Design and optimization of silo using FEM", IJESM(International journal of Engineering, Science and Metallurgy).
[9] Adem Dogangun, Zeki Karaca, Ahmet Durmus and Halil Sezen, M. ASCE, "cause of damage and failures in Silo structure", Journal of performance of constructed facilities.
[10] Dharmendra H. Pambhar, Prof. Shraddha R. Vaniya, "Design and analysis of circular silo (r.c.c) for storing bulk matrials", International Journal of Advance Research in Engineering, Science & Technology (IJAREST).

©IJRASET: All Rights are Reserved

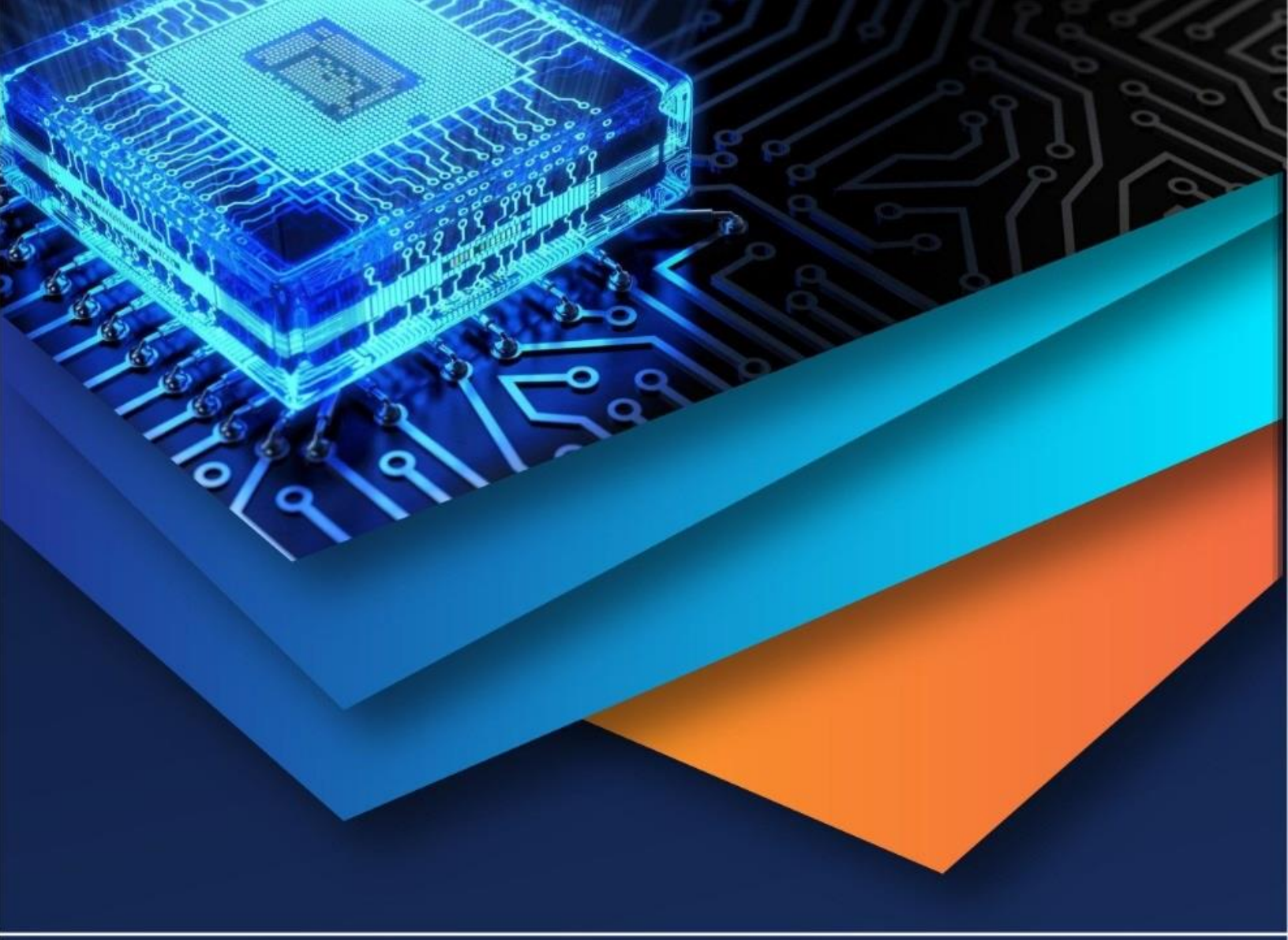

10.22214/IJRASET

45.98

IMPACT FACTOR: 7.129

IMPACT FACTOR: 7.429

INTERNATIONAL JOURNAL FOR RESEARCH

IN APPLIED SCIENCE & ENGINEERING TECHNOLOGY

Call : 08813907089 (24*7 Support on Whatsapp)