iJRASET
International Journal For Research in
Applied Science and Engineering Technology

INTERNATIONAL JOURNAL FOR RESEARCH

IN APPLIED SCIENCE & ENGINEERING TECHNOLOGY

Volume: 2 **Issue:** VI **Month of publication:** June 2014

DOI:

www.ijraset.com

Call: 08813907089 | E-mail ID: ijraset@gmail.com

Vol. 2 Issue VI, June 2014
ISSN: 2321-9653

INTERNATIONAL JOURNAL FOR RESEARCH IN APPLIED SCIENCE AND ENGINEERING TECHNOLOGY (IJRASET)

A Modeling of Wind and Solar Hybrid System Using Multi Rectifier Stage

Anup M. Gakare[1], Subhash Kamdi[2]

P.G. Student, Dept of Electrical Engineering, Rajiv Gandhi College of Engineering, Research & Technology, Chandrapur, Maharashtra, India[1].
Assistant Professor, Dept. of Electrical Engineering Rajiv Gandhi College of Engineering, Research & Technology, Chandrapur, Maharashtra, India[2].

***Abstract:** This paper presents power-control strategies of a grid-connected hybrid generation system with versatile power transfer. The hybrid system allows maximum utilization of freely available renewable sources like wind and photovoltaic energies. This paper presents a new system configuration of the multi input rectifier stage for a hybrid wind and photovoltaic energy system. This configuration allows the two sources to supply the load simultaneously depending on the availability of the energy sources maximum power from the sun when it is available. An adaptive MPPT algorithm with a standard perturbs and observed method will be used for the Photo Voltaic system. The main advantage of the hybrid system is to give continuous power supply to the load. The gating pulses to the inverter switches are implemented with conventional and fuzzy controller. This hybrid wind-photo voltaic system is modeled in MATLAB/ SIMULINK environment. Simulation circuit is analyzed and results are presented for this hybrid wind and solar energy system.*
***Keywords:** Renewable energy, Cuk converter, SEPIC converter, MPPT.*

I.INTRODUCTION

Recent developments and trends in the electric power consumption indicate an increasing use of renewable energy. Virtually all regions of the world have renewable resources of one type or another. By this point of view studies on renewable energies focuses more and more attention. Solar energy and wind energy are the two renewable energy sources most common in sue. Wind energy has become the least expensive renewable energy technology in existence and has peaked the interest of scientists and educators over the world [9]. Photovoltaic cells convert the energy from sunlight into DC electricity. PVs offer added advantages over other renewable energy sources in that they give off no noise and require practically no maintenance [15]. Hybridizing solar and wind power sources provide a realistic form of power generation. Many studies have been carried out on the use of renewable energy sources for power generation and many papers were presented earlier. The wind and solar energy systems are highly unreliable due to their unpredictable nature. In [17], a PV panel was incorporated with a diesel electric power system to analyze the reduction in the fuel consumed. It was seen that the incorporation of an additional renewable source can further reduce the fuel consumption. When a source is unavailable or insufficient in meeting the load demands, the other energy source can compensate for the difference. Several hybrid wind PV power systems with Maximum Power Point Tracking (MPPT) control have been proposed earlier [1]. They used a separate DC/DC buck and buck boost converter connected in fusion in the rectifier stage to perform the MPPT control for each of the renewable energy power sources. These systems have a problem that, due to the environmental factors influencing the wind turbine generator, high frequency current harmonics are injected into it. Buck and buck-boost converters do not have the capability to eliminate these harmonics. So the system requires passive input filters to remove it, making the system more bulky and expensive [1]. In this paper, a new converter topology for hybridizing the wind and solar energy sources has been proposed. In this topology, both wind and solar energy sources are incorporated together using a combination of Cuk and SEPIC converters, so that if one of the

IJRASET: ISSN: 2321-9653

INTERNATIONAL JOURNAL FOR RESEARCH IN APPLIED SCIENCE AND ENGINEERING TECHNOLOGY (IJRASET)

is unavailable, then the other source can compensate for it. The Cuk-SEPIC fused converters have the capability to eliminate the HF current harmonics in the wind generator. This eliminates the need of passive input filters in the system. These converters can support step up and step down operations for each renewable energy sources. They can also support individual and simultaneous operations. Solar energy source is the input to the Cuk converter and wind energy source is the input to the SEPIC converter. The average output voltage produced by the system will be the sum of the inputs of these two systems. All these advantages of the proposed hybrid system make it highly efficient and reliable.

II. PHOTOVOLTAIC (PV) SYSTEM

Photovoltaic (PV) technology involves converting solar energy directly into electrical energy by means of a solar cell. For a PV system, the voltage output is a constant DC whose magnitude depends on the configuration in which the solar cells/ modules are connected. On the other hand, the current output from the PV system primarily depends on the available solar irradiance. The main requirement of power electronic interfaces for the PV systems is to convert the generated DC voltage into a suitable AC for consumer use and utility connection. Generally, the DC voltage magnitude of the PV array is required to be boosted to a higher value by using DC-DC converters before converting them to the utility compatible AC. The DC-AC inverters are then utilized to convert the voltage to 50/60 Hz. AC. The process of controlling the voltage and current output of the array must be optimized based on the weather conditions. Specialized control algorithms have been developed called maximum power point tracking (MPPT) to constantly extract the maximum amount of power from the array under varying conditions. The MPPT control process and the voltage boosting are usually implemented in the DC-DC converter, whereas the DC-AC inverter is used for grid-current control.

1. A Modeling of a Solar Cell

A solar cell is the building block of a solar panel. A photovoltaic module is formed by connecting many solar cells in series and parallel. Considering only a single solar cell; it can be modeled by utilizing a current source, a diode and two resistors. This model is known as a single diode model of solar cell. Two diode models are also available but only single diode model is considered as shown in fig 1.

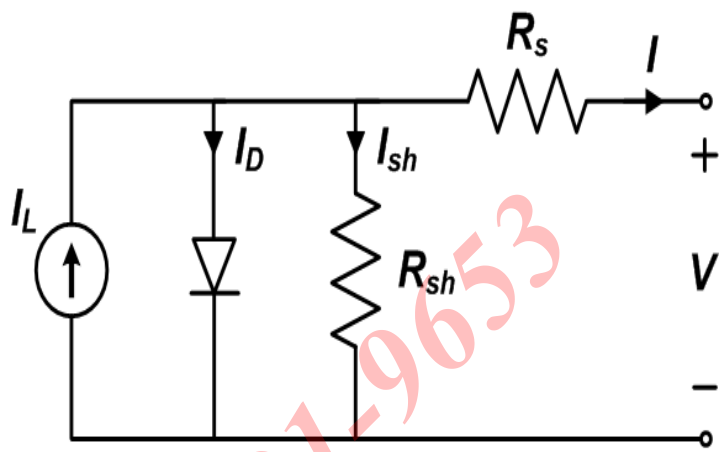

Fig: 1 Single diode model of solar cell

The characteristic equation for a photovoltaic cell is given by:

$I = I_{ph} – I_d – I_{sh}$

$I = I_{ph} – I_0 – [\exp \{q (V+R_sI) / (A K_BT)\} – 1]–(V+R_sI)/R_{sh}$

Where,

I_{ph} = photocurrent,

I_d – diode current,

I_0 = saturation current,

A = ideality factor,

q = electronic charge 1.6 X 10^{-9},

K_B = Boltzmann's gas constant (1.38 x 10^{-23}),

T = cell temperature,

R_s = series resistance,

R_{sh} = shunt resistance,

I = cell current,

V = cell Voltage

The characteristic equation of a solar module is dependent on the number of cells in parallel and number of cells in series. It is observed from experimental results that the current variation is less dependent on the shunt resistance and is more dependent on the series resistance.

$$I = I_{ph} – I_0 – [\exp \{q V /KT\}– 1] \quad (1)$$

The I-V and P-V curves for a solar cell are given in the following figure. It can be seen that the cell operates as a constant current source. at low values of operating voltages and a constant voltage source at low values of operating current.

IJRASET: ISSN: 2321-9653

INTERNATIONAL JOURNAL FOR RESEARCH IN APPLIED SCIENCE AND ENGINEERING TECHNOLOGY (IJRASET)

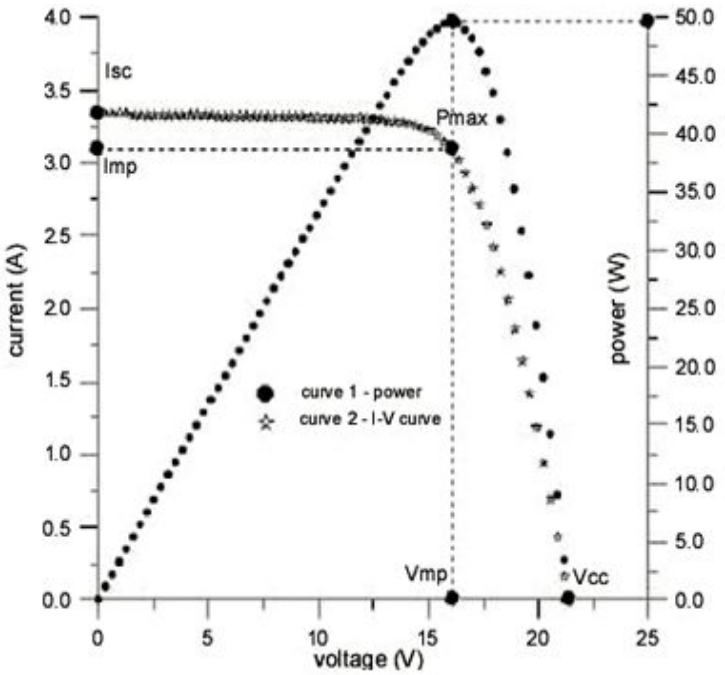

Fig:2 VI and PV characteristics of solar cell

III. WIND ENERGY

Wind turbines convert kinetic energy in the wind into mechanical power that can be converted into electrical energy with a generator. Power is normally generated either with an induction generator or with a synchronous generator. Synchronous generators are typically interconnected to the grid through power electronics converters. Power output is typically between 10KW to 2.5 MW and wind power is captured using a blade that is connected to the rotor of a generator. The power is generated only when the wind blows. Like PV systems, there are no fuel costs, but periodic maintenance of the wind turbines is required the basic equation of rather power of the wind in an area A, perpendicular to the wind blowing direction is given by :

P = (pACpV3) / □ (2)

Where P is the power, p is the air density, V is the wind speed and Cp is the power coefficient, which describes the fraction of the wind captured by a wind turbine. Fig. 3 shows a steady wind speed – power curve, which reflects the regulated power achievable from the wind turbine,. At very low wind speeds the generated power is too low to be utilized.

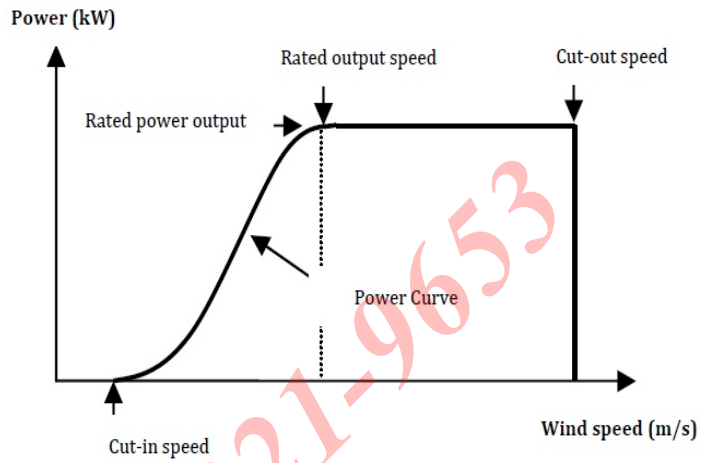

Fig: 3 Power from wind turbine

IV. DC – DC CONVERTERS

DC-DC converters can be used as switching mode regulators to convert an unregulated dc voltage to a regulated dc output voltage. The regulation is normally achieved by PWM at a fixed frequency and the switching device is generally BJT, MOSFET or IGBT.

1. Cuk Converter

The Cuk converter is a type of DC-DC converter that has an output voltage magnitude that is either greater than or less than the input voltage magnitude.

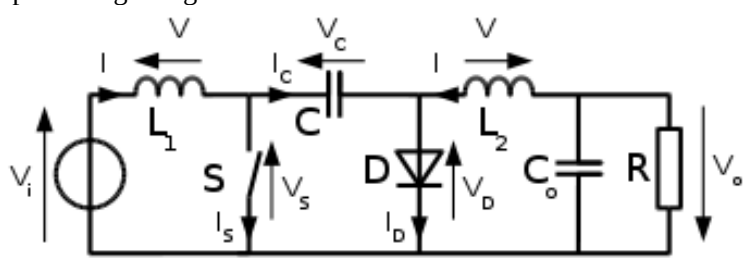

Fig: 4 Cuk Converters

It has the capability for both step up and step down operation. The output polarity of the converter is negative with respect to the common terminal. This converter always works in the continuous conduction mode. The Cuk converter operates via capacitive energy transfer. When M_1 is turned on, the diode D is reverse biased, the current in both L_1 and L_2 increases, and the power is

IJRASET: ISSN: 2321-9653

INTERNATIONAL JOURNAL FOR RESEARCH IN APPLIED SCIENCE AND ENGINEERING TECHNOLOGY (IJRASET)

delivered to the load. When M_1 is turned off, D becomes forward biased and the capacitor C is recharged. The voltage conversion ratio Mcuk of the Cuk converter is given by:

$$V_0 = - V_{in} [D/(I-D)] \quad (3)$$

2. SEPIC Converter

Single-ended primary-inductor converter (SEPIC) is a type of DC-DC converter allowing the voltage at its output to be greater than, less than, or equal to that at its input. It is similar to a buck boost converter. It has the capability for both step up and step down operation. The output polarity of the converter is positive with respect to the common terminal.

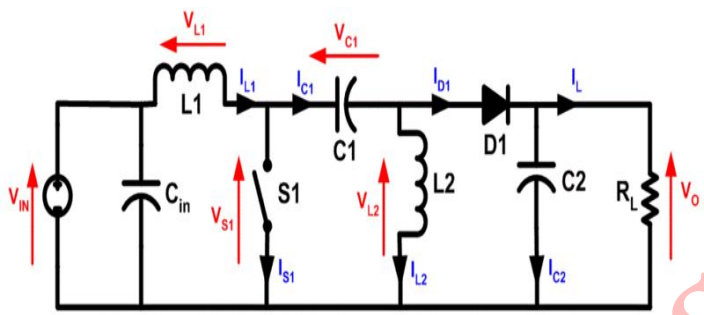

Fig: 5 SEPIC converter

The capacitor C_1 blocks any DC current path between the input and the output. The anode of the diode D_1 is connected to a defined potential. When the switch M_1 is turned on, the input voltage, V_{in} appears across the inductor L_1 and the current I_{LI} increases. Energy is also stored in the inductor L_2 as soon as the voltage across the capacitor C_1 appears across L_2. The diode D_1 is reverse biased during this period. But when M_1 turns off, D_1 conducts. The energy stores in L_1 and L_2 is delivered to the output, and C_1 is recharged by L_1 for the next period. The voltage conversion ratio M_{SEPIC} of the SEPIC converter is given by:

$$V_0 = V_{in} [D/(I-D)] \quad (4)$$

3. Cuk-SEPIC Fused Converter for hybrid energy system

A hybrid wind-solar energy system is shown in Fig. 6 where one of the inputs is connected to the output of the PV array and the other input connected to the output of a wind generator. The fusion of the two converters is achieved by reconfiguring the two existing diode from each converter and the shared utilization of the Cuk output inductor by the SEPIC converter

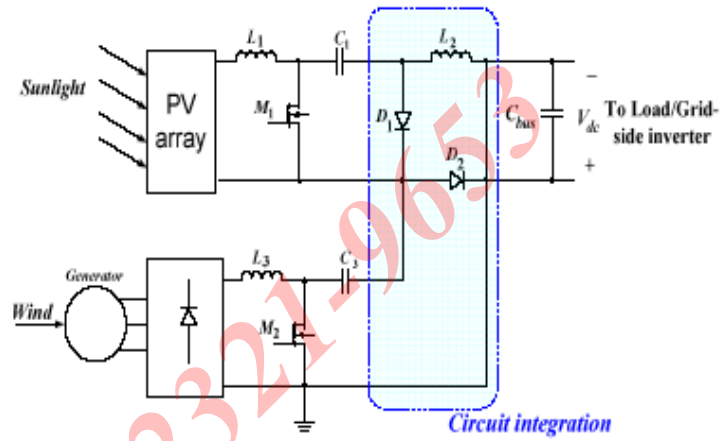

Fig: 6 proposed rectifier stage for hybrid wind/PV system

If the turn on duration of M1 is longer than M2, then the switching states will be state I, II, IV. Similarly, the switching states will be state I, III, IV if the switch conduction periods are vice versa. In the following, $[_{PV}$ is the average input current from the PV source; I_w, is the RMS input current after the rectifier (w3ind case) and I_{dc} is the average system output current.

$$V_{dc} = (d_1 / (1-d_1) V_{pv} + (d_2/ I - d_2) V_w \quad (6)$$

State I (M_1 on, M_2 on):

$$I_{L1} = I_{PV} + V_{PV} / L_1 \; t_o < d_1 T_s \quad (7)$$
$$I_{L2} = I_{dc} + (V_{ct} + V_{c2}) / t_o < t < d_1 T_s \quad (8)$$
$$I_{L3} = I_w + V_w / L_3 \; t_o < t < d_1 T_s \quad (9)$$

State II (M_1 on, M_2 off):

If only the PV source is available, then D1 turns off and D2 will always be on and the circuit becomes a Cuk converter as shown in the input to output voltage relationship is given by equation (3). In both cases, both converters have step-up/down capability.

State III (M_1 off, M_2 on):

This configuration allows each converter to operate normally individually in the event that one source is unavailable the case

IJRASET: ISSN: 2321-9653

INTERNATIONAL JOURNAL FOR RESEARCH IN APPLIED SCIENCE AND ENGINEERING TECHNOLOGY (IJRASET)

when only the wind source is available. In this case, D2 turns off and D1 turns on; the proposed circuit becomes a SEPIC converter and the input to output voltage relationship is given by equation.

$$I_{LI} = I_{PV} + ((V_{PV} - V_{CI})/ L_1)\ t\ d_1\ Ts < t < d_2 Ts \quad (10)$$

$$I_{L2} = I_{dc} + (V_{ct} / L_2)\ t\ d_1\ Ts < t < d_2\ Ts \quad (11)$$

$$I_{L3} = I_w + (V_w / L_3)\ t\ d_1\ Ts < t < d_2\ Ts \quad (12)$$

State IV (M_1 off, M2 off):

The converter configuration in the event when no source is available.

$$I_{LI} = I_{PV} + ((V_{PV} - V_{CI})/ L_1)\ t\ d_2\ Ts < t < Ts \quad (13)$$

$$I_{L2} = I_{dc} + (V_{c2} / L_2)\ t\ d_2\ Ts < t < Ts \quad (14)$$

$$I_{L3} = I_w + (V_w - V_{C2} - V_{dc})/L_3)\ t\ d_2\ Ts < t < Ts \quad (15)$$

V. MAXIMUM POWER POINT TRACKING (MPPT)

The MPPT control process and the voltage boosting are usually implemented in the DC-DC converter. In this paper Perturb and Observe (P&O) method is used for maximum power point tracking. In P & O method, the MPPT algorithm is based on the calculation of the PV output power and the power change by sampling both the PV current and voltage. The tracker operates by periodically incrementing or decrementing the solar array voltage. If a given perturbation leads to an increase (decrease) in the output power of the PV, then the subsequent perturbation is generated in the same (opposite) direction. So the duty cycle of the DC-DC converter is changed and the process is repeated until the maximum power point has been reached.

VI. THREE PHASE INVERTER

The inverter plays an important role in safe and reliable grid connection operation. It is also necessary to generate high power quality to grid with reasonable cost. A standard three-phase self-commutated inverter is shown in Fig. 11 consisting of six controlled switches such as IGBT. Self-commutated inverter can be current source or voltage source type. The inverters can be voltage controlled or current controlled. The inverters are voltage controlled to control grid voltage whereas current controlled inverters reduce the total harmonic distortion (THD) in the current fed to grid and regulate the ac voltage at desired value.

VII. RESULTS AND DISCUSION

The hybrid grid connected system with Cuk-SEPIC fused converter is simulated using MATLAB/SIMULING. The wind-solar hybrid system model using fused Cuk – SEPIC converter is shown in Fig. 12. The results for the three operating modes: both sources acting together (Cuk – SEPIC mode), solar alone (Cuk mode) and wind alone (SEPIC mode) are shown.

Model I – (wind and PV hybrid)

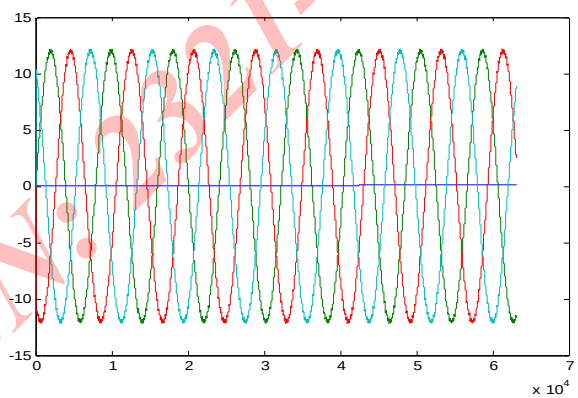

Fig: 7 Injected three phase generator current of wind turbine when simultanious opration with wind and PV source (fusion of Cuk & SEPIC Converter)

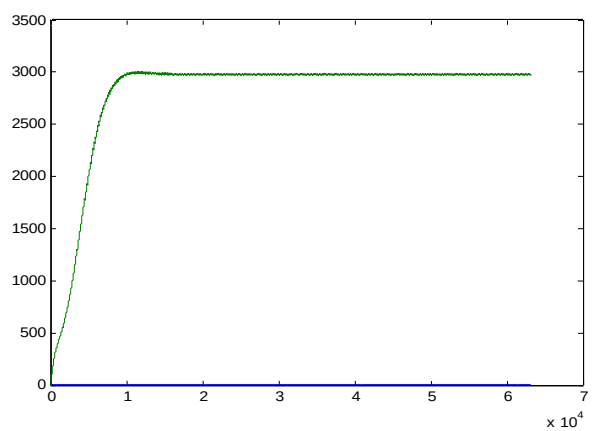

Fig: 8 Output Power of wind and PV source.

IJRASET: ISSN: 2321-9653

INTERNATIONAL JOURNAL FOR RESEARCH IN APPLIED SCIENCE AND ENGINEERING TECHNOLOGY (IJRASET)

Mode II – (Solar alone)

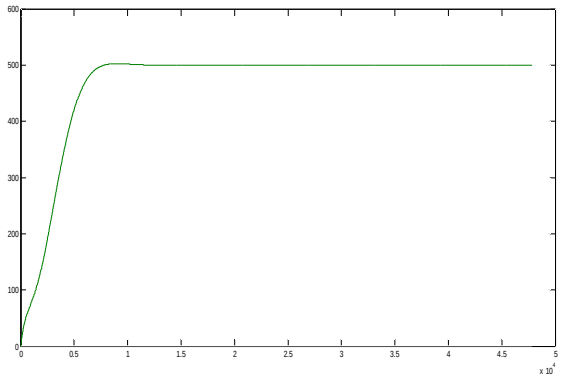

Fig: 9 Output Power of PV source (Cuk converter)

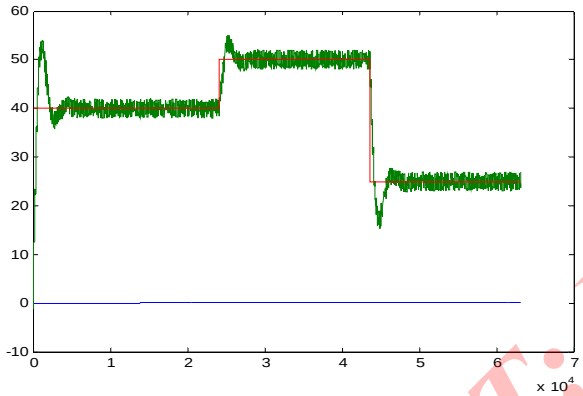

Fig: 10 Solar MPPT (PV output current)

Mode III – (Wind alone)

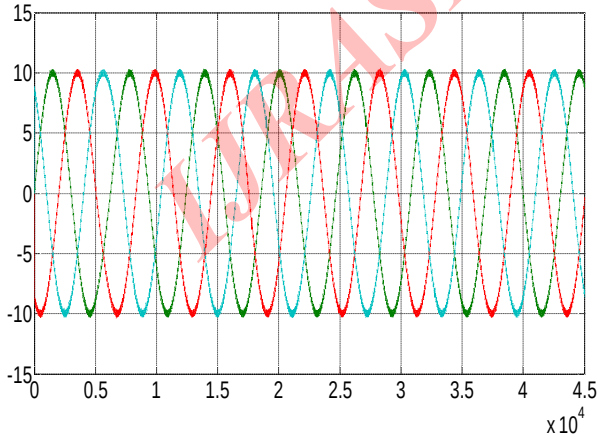

Fig: 11 Injected three phase generator current of wind turbine

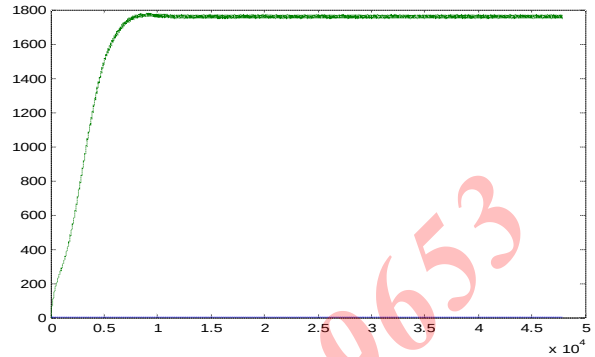

Fig: 12 Output Power of Wind turbine (SEPIC Converter)

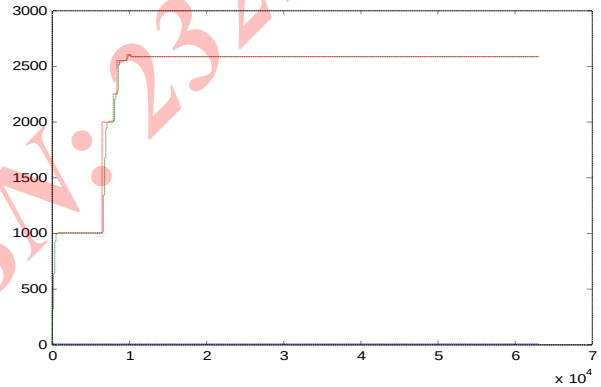

Fig: 13 Wind MPPT (Wind turbine Generator Output current)

VIII. CONCLUSION

A Cuk-SEPIC fused converter for hybrid wind-solar energy system has been used. Simulation results of hybrid system using Cuk-SEPIC fused converter are presented. MPPT has been realized for PV source suing perturbs and observe (P&O) method. The common dc link voltage is inverted to three phase ac for utility connection. The three phase inverter is current controlled to make the inverter suitable for grid connection. The various features of the system have been demonstrated this simulation study. Both renewable sources can be stepped up or down (supports wide ranges of PV and wind input). Individual and simultaneous operations are supported from the simulation results, it is observed that THD of the ac side current is less than 5% (within the IEEE limits) in all the three modes i.e. hybrid or individual (PV/Wind) modes. Also as per IEC distortion limits for distributed generation

IJRASET: ISSN: 2321-9653

INTERNATIONAL JOURNAL FOR RESEARCH IN APPLIED SCIENCE AND ENGINEERING TECHNOLOGY (IJRASET)

systems, the third to ninth harmonic are less than 4% and eleven, thirteenth are less than 2% of the fundamental component of ac side current in all the three modes.

REFERENCES

(1) Chen et al., "Multi-Input Inverter for Grid-Connected Hybrid PV/Wind Power System", IEEE Transactions on Power Electronics, vol. 22, May 2007.
(2) A. Bakhashal et al., "A Hybrid Wind – Solar Energy System. A New Rectifier Stage Topology".
(3) R. Bharanikumar and A. Nirmal Kumar, "Analysis of Wind Turbine Driven PM Generator with Power Converters", International Joural of Computer and Elecrical Engineering. Vol 2 (4), August 2010.
(4) R. Billinaton and R. Karki, "Capacity Expansion of Small Isolated Power Systems Using PV and Wind Energy", IEEE Transactions on Power Systems, vol. 16 (4), November 2001.
(5) D.C. Drago and G. Adrian, "Modeling of renewable hybrid energy sources", Scientific Bulletion of the Petru Major University of Tirgu Mures, Vol. 6, 2009.
(6) J. Hui, "An Adaptive Control Algorithm for Maximum Power Point Tracking for Wind Energy Conversion Systems":, Department of Electrical and Computer Engineering, Queen's University, December 2008.
(7) S. Jain and V. Agarwal, "An Integrated Hybri9d Power Supply for Distributed Generation Applications Fed by Nonconventional Energy Sources", IEEE Transactions of Energy Conversion, vol. 22 (2). June 2008.
(8) Kim et al., "Dynamic Modeling and Control of a Grid-Connected Hybrid Generation System with Versatile Power Transfer", IEEE transactions on industrial electronics, VOL. 55(4), April 2008.
(9) E. Koutroulis and K. Kalaitzakis, "Design of a Maximum Power Tracking System for Wind-Energy-Conversion Applications", IEEE Transactions on Industrial Electronics, vol. 53 (2), April 2006.
(10) V. Lorentz, "Bidirectional DC Voltage Conversion for Low Power Applications", University Friedrich-Alexander of Erlangen – Nuremberg 2009. Electrical and Electronics Engineering An International Journal (EEEU) Vol. 1. No. 2, August 2012.
(11) Mahmoud et al, "A Simple Approach to Modeling and Simulation of Photovoltaic Modules", IEEE Transactions on Sustainable Energy, vol. 3 (1), January 2012.
(12) S. Nath and S. Rana, "The Modeling and Simulation of Wind Energy Based Power System using MATLAB", International Journal of Power System Operation and Energy Management, Vol 1, 2011.
(13) S.K. Pradhan and D. Das, "Modeling And Simulation of PV Array with Boost Converter: An Open Loop Study", National Institute of Technology, Rourkela, 2011.
(14) Z.M. Salameh and F. Giraudand, "Steady – State Performance of a Grid-Connected Rooftop Hybrid Wind-Photovoltaic Power System with Battery Storage", IEEE transactions on energy conversion, vol,. 16(1), March 2001.
(15) Shu-Hung et al, "A Novel Maximum Power Point Tracking Technique for Solar Panels Using a SEPIC or Cuk Converter", IEEE Transactions on Power Electronics, vol. 18 (3), May 2003.
(16) Sridhar et al., "Modeling of PV Array and Performance Enhancement by MPPT Algorithm", International Journal of Computer Applications, Vol. 7(5), September 2010.
(17) Wies et al., "Simulink Model for Economic Analysis and Environmental Impacts of a PV with Diesel- Battery System for Remote Villages", IEEE transactions on Power Systems, vol. 20 (2), May 2005.
(18) F. Valenciaga and P.F. Puleston, "Supervisor Control for a Stand-Alone Hybrid Generation System Using Wind and Photovoltaic Energy", IEEE transactions on energy conversion, VOL 20 [2], JUNE 2005.

IJRASET: ISSN: 2321-9653

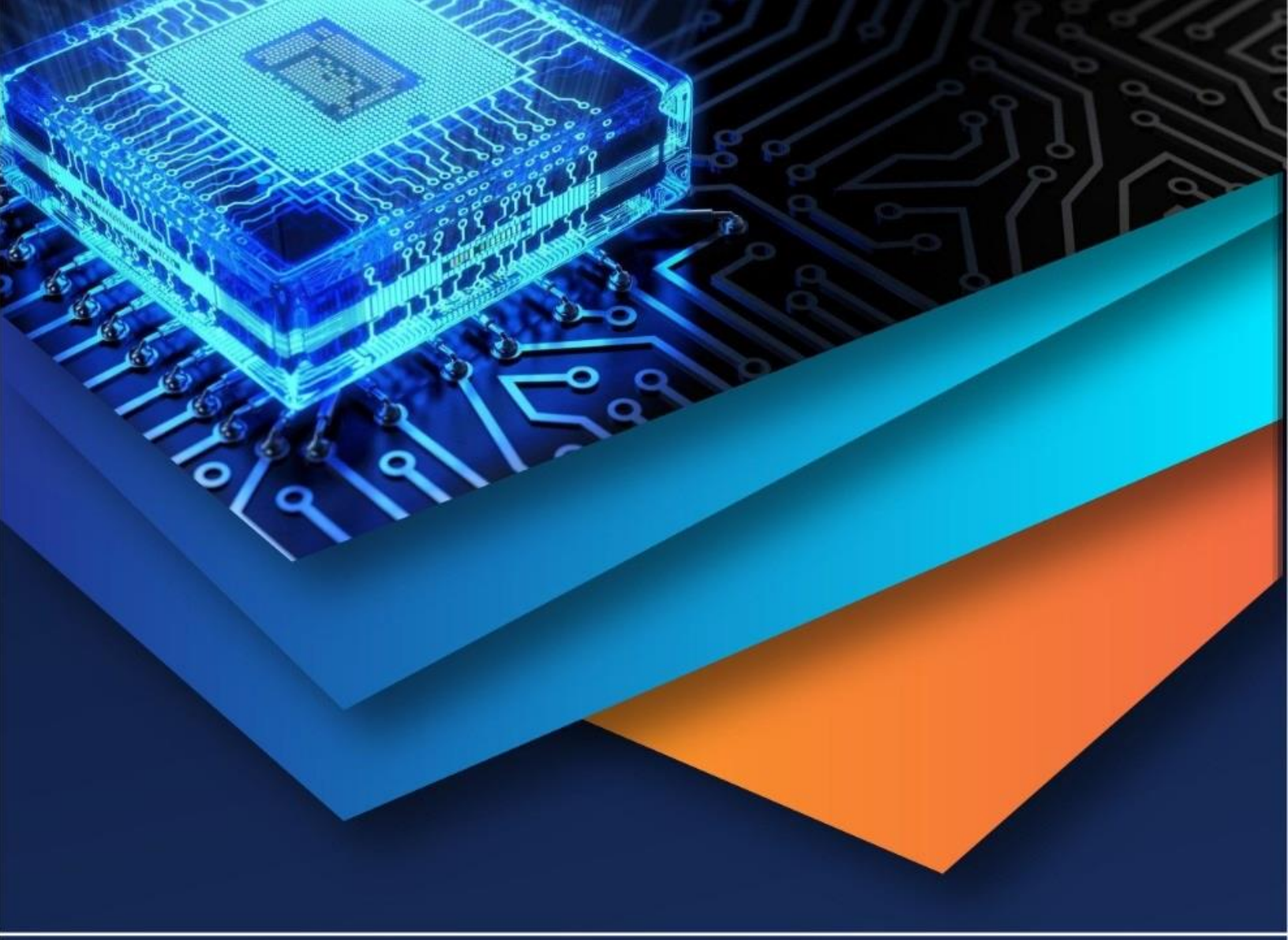

10.22214/IJRASET

45.98

IMPACT FACTOR: 7.129

IMPACT FACTOR: 7.429

INTERNATIONAL JOURNAL FOR RESEARCH

IN APPLIED SCIENCE & ENGINEERING TECHNOLOGY

Call : 08813907089 (24*7 Support on Whatsapp)