iJRASET
International Journal For Research in Applied Science and Engineering Technology

INTERNATIONAL JOURNAL FOR RESEARCH

IN APPLIED SCIENCE & ENGINEERING TECHNOLOGY

Volume: 5 **Issue:** I **Month of publication:** January 2017

DOI:

www.ijraset.com

Call: 08813907089 | E-mail ID: ijraset@gmail.com

Volume 5 Issue I, January 2017
ISSN: 2321-9653
International Journal for Research in Applied Science & Engineering Technology (IJRASET)

Design and Analysis of Aircraft Windshield by Using FSI Technique

G. Mallikarjuna[1], B. Anjaneyulu[2], K. Kiran Kumar Rao[3], Sandya Rani Borukati[4]
Department of Mechanical Engineering, GATES Institute of Technology, Gooty. JNTUA

Abstract: ***The windshield or windscreen of an aircraft, car, bus, motorbike or tram is the front window. Windshield is an important assembly of an aircraft and some master features are depended on its quality. The important quality characteristics of windshield are visibility through the canopy, structure rigidity, impact resistance, reliability of the internal mechanisms, and the lightness of construction.***

The most widely used material for light trainer aircraft windshield is Glass. In the present work, it is proposed to replace the existing glass for a light trainer. In the present work two different materials were considered namely polymethyl-methacrylate and poly vinyl butyl for windshield. Windshield modeling was done in 3D using Pro/Engineer software. Dynamic analysis was carried out by Computational Fluid Dynamics (CFD), Fluid-Solid-Interaction (FSI) approach and ANSYS in order to evaluate fluid pressure, stress distribution and deformation in windshield with different air speeds. The analysis is carried out for all the three different materials at various air speeds of 900,800,600 and 400km/hr.

In this thesis, the FSI analysis to determine the pressure, velocity, stress and deformation at different speeds and materials.

Keywords: Glass, polymethyl-methacrylate and poly vinyl butyl, Windshield modeling was done in 3D using analysis, finite element methods, ANSYS, Pro-Engineering.

I. INTRODUCTION

A. Windshield

The windshield (North America) or windscreen (Commonwealth countries) of an aircraft, car, bus, motorbike or tram is the front window. Modern windshields are generally made of laminated safety glass, a type of treated glass, which consists of two (typically) curved sheets of glass with a plastic layer laminated between them for safety, and are bonded into the window frame. Motorbike windshields are often made of high-impact acrylic plastic.

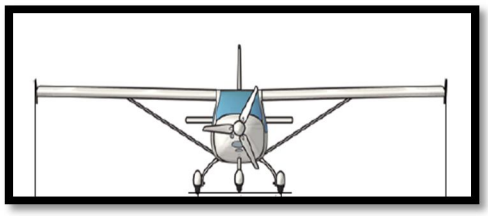

Aircraft

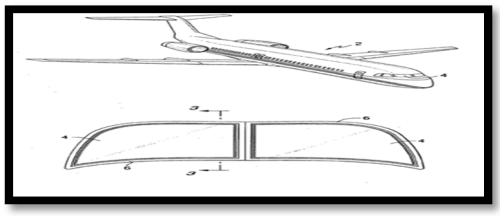

Aircraft windshield

The term windshield is used generally throughout North America. The term windscreen is the usual term in the British Isles and Australasia for all vehicles. In the US windscreen refers to the mesh or foam placed over a microphone to minimize wind noise, while a windshield refers to the front window of a car. In the UK, the terms are reversed, although generally, the foam screen is referred to as a microphone shield, and not a windshield.

Sports or racing cars would sometimes have aero screens, which were small semi-circular or rectangular windshields. These were often mounted in pairs behind a foldable flat windshield. Aero screens are usually less than 20 cm (8 in) in height. They are known as aero screens because they only deflect the wind. The twin aero screen setup (often called Brook lands) was popular among older sports and modern cars in vintage style.

B. Windshield main structure

After basic fuselage structure were designed, it had been clear where exactly windshield structure had to be adapted. It was decided main frame to be consisted of profiles which would be made by technology of sheet metal banding.

Searching for existing windshield frame profiles it was found how it might look. Main windshield structure consists of five small

©IJRASET: All Rights are Reserved

Volume 5 Issue I, January 2017
ISSN: 2321-9653
International Journal for Research in Applied Science & Engineering Technology (IJRASET)

frames and also additional small sheet metal pieces which are all connected with frames by the rivets.
Every small frame is build by two sheet metal profiles which cross section.
Some of these profiles are very big challenge to make in practice because of their curvatures.

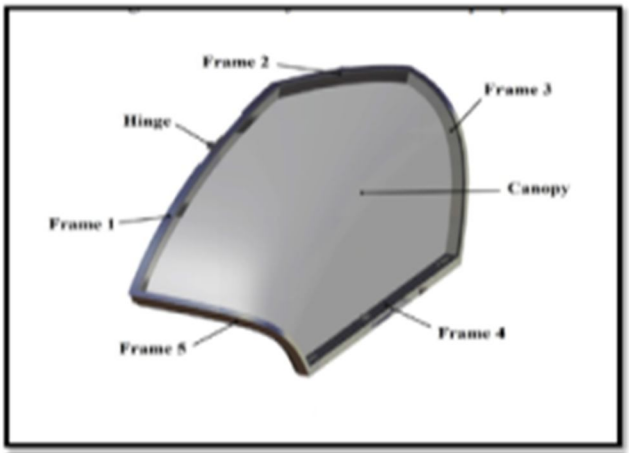

II. INTRODUCTION FLUID-STRUCTURE INTERACTION

Fluid-structure interaction (FSI) is a metaphysics coupling between the laws that describe fluid dynamics and structural mechanics. This phenomenon is characterized by interactions – which can be stable or oscillatory – between a deformable or moving structure and a surrounding or internal fluid flow.When a fluid flow encounters a structure, stresses and strains are exerted on the solid object – forces that can lead to deformations. These deformations can be quite large or very small, depending on the pressure and velocity of the flow and the material properties of the actual structure.
If the deformations of the structure are quite small and the variations in time are also relatively slow, the fluid's behavior will not be greatly affected by the deformation, and we can concern ourselves with only the resultant stresses in the solid parts. However, if the variations in time are fast, greater than a few cycles per second, then even small structural deformations will lead to pressure waves in the fluid. These pressure waves lead to the radiation of sound from vibrating structures. Such problems can be treated as an acoustic, rather than a fluid-structure interaction.Yet, if the deformations of the structure are large, the velocity and pressure fields of the fluid will change as a result, and we need to treat the problem as a bidirectional coupled metaphysics analysis: The fluid flow and pressure fields affect the structural deformations, and the structural deformations affect the flow and pressure.
Solidworks flow simulation uses Computational Fluid Dynamics (CFD) analysis to enable quick, efficient simulation of fluid flow and heat transfer. You can easily calculate fluid forces and understand the impact of a liquid or gas on product performance.
Tightly integrated with SOLIDWORKS CAD, CFD analysis using SOLIDWORKS Simulation takes the complexity out of flow analysis and can be a regular part of your design process, reducing the need for costly prototypes, eliminating rework and delays, and saving time and development costs
Computational fluid dynamics, usually abbreviated as CFD, is a branch of fluid mechanics that uses numerical methods and algorithms to solve and analyze problems that involve fluid flows. Computers are used to perform the calculations required to simulate the interaction of liquids and gases with surfaces defined by boundary conditions. With high-speed supercomputers, better solutions can be achieved. Ongoing research yields software that improves the accuracy and speed of complex simulation scenarios such as transonic or turbulent flows. Initial experimental validation of such software is performed using a wind tunnel with the final validation coming in full-scale testing, e.g. flight tests.

III. INTRODUCTION TO CAD

Computer-aided design (CAD), also known as computer-aided design and drafting (CADD), is the use of computer technology for the process of design and design-documentation. Computer Aided Drafting describes the process of drafting with a computer. CADD software, or environments, provide the user with input-tools for the purpose of streamlining design processes; drafting, documentation, and manufacturing processes. CADD output is often in the form of electronic files for print or machining operations. The development of CADD-based software is in direct correlation with the processes it seeks to economize; industry-based software

©IJRASET: All Rights are Reserved

Volume 5 Issue I, January 2017
ISSN: 2321-9653
International Journal for Research in Applied Science & Engineering Technology (IJRASET)

(construction, manufacturing, etc.) typically uses vector-based (linear) environments whereas graphic-based software utilizes raster-based (pixilated) environments.

CADD environments often involve more than just shapes. As in the manual drafting of technical and engineering drawings, the output of CAD must convey information, such as materials, processes, dimensions, and tolerances, according to application-specific conventions.CAD may be used to design curves and figures in two-dimensional (2D) space; or curves, surfaces, and solids in three-dimensional (3D) objects.

A. Introduction to pro/engineer

Pro/ENGINEER Wildfire is the standard in 3D product design, featuring industry-leading productivity tools that promote best practices in design while ensuring compliance with your industry and company standards. Integrated Pro/ENGINEER CAD/CAM/CAE solutions allow you to design faster than ever, while maximizing innovation and quality to ultimately create exceptional products.

Customer requirements may change and time pressures may continue to mount, but your product design needs remain the same - regardless of your project's scope, you need the powerful, easy-to-use, affordable solution that Pro/ENGINEER provides.

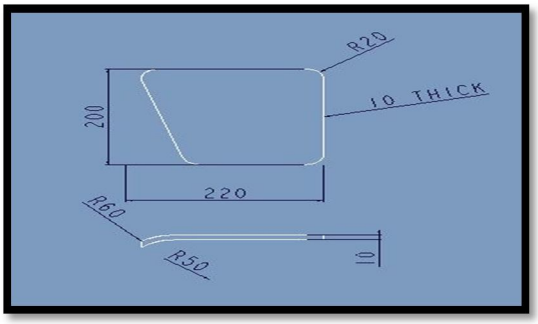

2d drawing

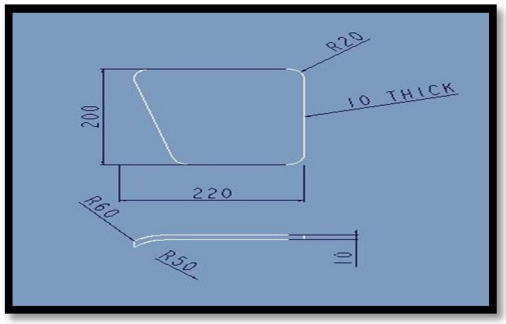

models of windshield using pro-e wildfire

AT SPEED 900 km/hr

ANSYS workbench select analysis system fluid flow fluent → double click

Select geometry →right click → import geometry select browse open part ok

Select mesh on work bench → right click edit select mesh on left side part tree → right click →generate mesh

Finite element analysis or FEA representing a real project as a “mesh” a series of small, regularly shaped tetrahedron connected elements, as shown in the above fig.4.3And then setting up and solving huge arrays of simultaneous equations. The finer the mesh, the more accurate the results but more computing power is required.

In CFD, the input parameters cannot be applied directly.

Hence one has to create boundary conditions for air inlet and air outlet.

Select faces right click create named section enter name air inlet Select faces right clickcreate named section enter name a.

Update project>setup>edit>model>select>energy equation (on)>ok

Materials> Materials > new >create or edit >specify fluid material or specify properties > ok

Select fluid

Boundary conditions>inlet>enter required inlet values

Inlet air Velocity

Speed (km/hr)	Velocity (m/s)
900	250
800	222.22
600	166.66
400	111.11

Speed Vs velocity

Pressure=101325Pa Temperature=313K

Solution > Solution Initialization > Hybrid Initialization >done

©IJRASET: All Rights are Reserved

Run calculations > no of iterations = 100> calculate > calculation complete>ok
Results>edit>select contours>ok>select location (inlet, outlet, wall.etc)>select pressure>apply

B. Pressure contour

According to the above contour plot, the maximum static pressure at corner portions of the boundary of inlet and minimum static pressure at the boundary of outlet.
According to the above contour plot, the maximum pressure is 7.51e+02Pa and minimum static pressure is 3.75e+01Pa.

C. Velocity magnitude

According to the above contour plot, the maximum velocity magnitude of the wind shield at inside of the boundary and minimum velocity magnitude at outside of the boundary. According to the above contour plot, the maximum velocity is 2.51e+02m/s and minimum velocity is 1.28e+01m/s.

D. Deformation

we get to know this technique gives the deformation of the wind shield due to action of opposed air forces developed which is imporant for accurate performance of the wind shield operation under severe conditions.
It is observed that there is substantial amount of deformation of the wind shield. When the loads applied i.e. velocity and pressure are imported and applied on wind shield, the maximum deformation value is 2.5173e-5.

E. Stress

When the loads i.e. pressure and velocity applied on wind shield, the maximum stress value is 0.0082824MPa at one side of the edge of the wind shield and minimum stress is 0.00012595MPa

F. Strain

When the loads i.e. pressure and velocity applied on wind shield, the maximum strain value is 1.2947e-7 at one side of the edge of the wind shield and minimum strain is 2.7565e-9.

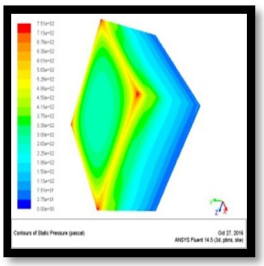
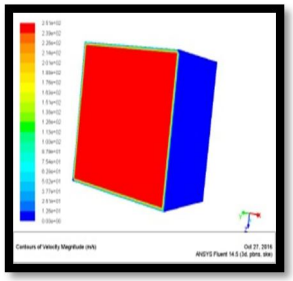
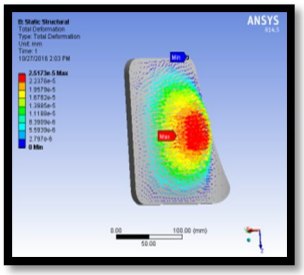

Pressure contours velocity contours Deformation Contours for glass

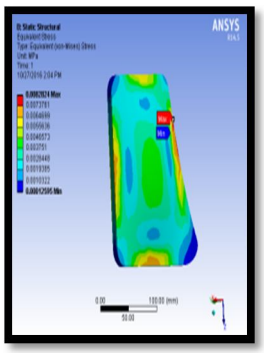

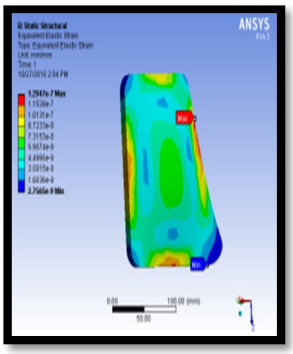

Stress contours for glass Strain contours for glas

In the same procedure for the analysis of polymethyl-methacrylate and poly vinyl butyl materials.

©IJRASET: All Rights are Reserved

Volume 5 Issue I, January 2017
ISSN: 2321-9653
International Journal for Research in Applied Science & Engineering Technology (IJRASET)

IV. CFD RESULT TABLE

STATIC ANALYSIS RESULT

Speed km/hr	materials	Deformation(mm)	Stress(MPa)	Strain
900	Glass	2.5173e-5	0.0082824	1.2947e-7
	polymethyl methacrylate	3.7746e-6	0.0082039	2.2197e-8
	Poly vinyl butyl	0.000533	0.0082324	3.1699e-6
800 800	Glass	2.0156e-5	0.0066598	1.041e-7
	polymethyl methacrylate	3.0223e-6	0.0066007	1.7859e-8
	Poly vinyl butyl	0.00042677	0.0066238	2.5505e-6
600	Glass	1.1825e-5	0.0039146	6.1193e-8
	polymethyl methacrylate	1.7731e-6	0.0038801	1.0498e-8
	Poly vinyl butyl	0.00025038	0.0038937	1.4993e-6
400	Glass	5.6415e-6	0.0018608	2.9088e-8
	polymethyl methacrylate	8.4594e-7	0.0018433	4.9874e-9
	Poly vinyl butyl	0.00011945	0.0018498	7.1224e-7

Speed km/hr	Pressure(Pa)	Velocity(m/s)
900	7.51e+02	2.51e+02
800	6.07e+02	2.23e+02
600	3.54e+02	1.67e+02
400	1.66e+02	1.12e+02

Deformation, stress and strain with respect to speed for different material

Pressure Plot

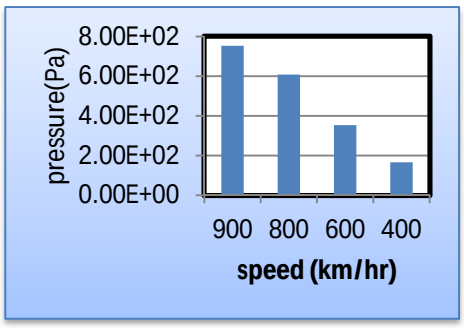

A plot between maximum pressure and speeds by FSI approach is shown in above fig. From the plot the variation of maximum

©IJRASET: All Rights are Reserved

Volume 5 Issue I, January 2017
ISSN: 2321-9653
International Journal for Research in Applied Science & Engineering Technology (IJRASET)

static pressure is observed. Maximum static pressure increases by increasing speeds

Velocity plot

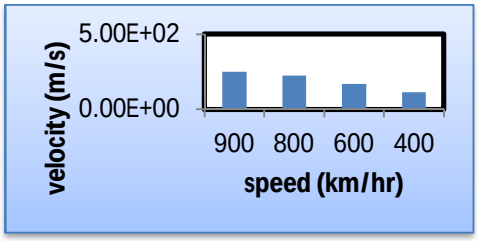

A plot between maximum velocity and speeds by FSI approach is shown in above fig. From the plot the variation of maximum velocity is observed. Maximum velocity increases by increasing in speeds.

DEFORMATION PLOT

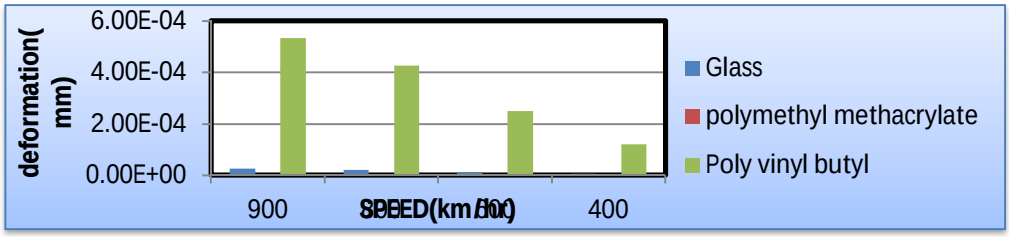

Speed Vs Deformation

STRESS PLOT

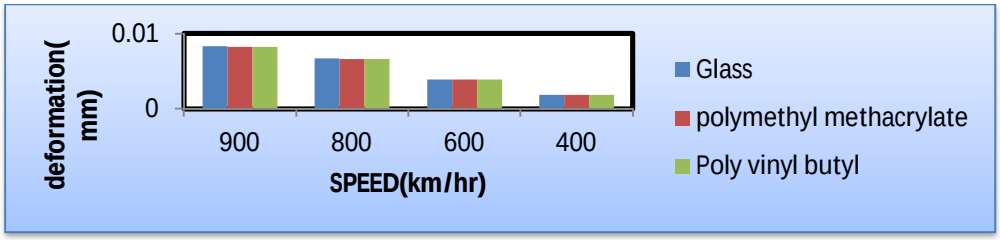

peed vs deformation with respect to different materials

V. CONCLUSIONS

In this report, a windshield for a light trainer aircraft is analyzed by using computational fluid dynamics (CFD) and fluid-solid-interaction (FSI) approach with different air speeds using ANSYS in order to evaluate fluid pressure, stress distribution and deformation. Windshield is modeled in 3D by using software Pro-E Wildfire 5.0. Three different materials like glass, polymethyl methacrylate and poly vinyl butyl were considered to analyze the deformation and stress at various speeds of 900, 800, 600 and 400 km/hr. By observing the CFD analysis results, the pressure and velocity are increasing by increasing air speed. By observing the CFD analysis the pressure drop and velocity increases by increasing the speed km/hr.By observing the static analysis, the stress values are decreases by decreasing the speeds, the taken different pressure values are from CFD analysis. The stress value is less for polymethyl methacrylate material than glass and poly vinyl butyl

So we can conclude that the polymethyl methacrylate material is better for wind shield.

A. Scope for future work:

The same analysis can be done for the other thermoplastic materials which are less in weight like Polyurethane, polyester, polypropylene.

The same analysis can be done at other speeds of the aircraft.

REFERENCES

[1] Ahmed mukhtar.,bojan,šekutkovski, sonjapetrović, aleksandarbojanić “windshield design for the light trainer aircraft”, accepted and published in International

©IJRASET: All Rights are Reserved

Journal of Recent Trends in Mechanical Engineering (IJRTME),Vol.3(2011) No 1, ISSN 1821-1259 ,pp. 61-64 , 28.03.2011

[2] Uzair Ahmed Dar, Weihong Zhang, YingjieXu "fe analysis of dynamic response of aircraft windshield against bird impact" accepted and published in International Journal of Aerospace Engineering (IJAE),Volume 2013 (2013), Article ID 171768, 12 pages

[3] Wang Xinjun, FengZhenzhou, Wang Fusheng, YueZhufeng "Dynamic response analysis of bird strike on aircraft windshield based on damage-modified nonlinear visco elastic constitutive relation" accepted and published in ChineseJournal of Aeronautics (CJA),Volume 1 ,Issue 1 31 July 200

[4] Reza Hedayati, Saeed Ziaei-Rad, Arameh Eyvazian, Abdel Magid Hamouda, "bird strike analysis on a typical helicopter windshield

[5] with different lay-ups" accepted and published in Journal of Mechanical Science and Technology (JMST),April 2014, Volume 28, Issue 4, pp 1381–1392

[6] Koji Nakamura, Yasuhiro Takakik., "proceedings of the 11th world congress on intelligent transportation systems", accepted and published in International journal of civil and transportation (IJCT),vol. 85 (2004), pp. 3058–3065

[7] N. Aoki, "Intelligent Transportation Systems, Achievement of certain aesthetic objectives in roadside development is handicapped by severe limitations in our understanding of motorists' desires and responses", accepted and published in International journal of Aeronautical and civil engineering (IJACE),11 August-2014

[8] Bucklay,Stindt, "The annual symposium on vehicle displays". accepted and published in international journal Defense Academy of science (IJDAS) , pp.131–135,sep-2016

[9] Prof. D.V.Mahindru, MsPriyankaMahendru , "environmental control system for military & civil aircraft", accepted and published in Global Journal Of Researches In Aerospace Engineering(GJRAE), Volume 11 ,Issue 5 ,Version 1.0, August 2011

[10] Lynn Lunsford "crew saw ice on windshield, wings before crash dangerous accumulation on plane",accepted and published in International Journal In Mechanical Engineering of Science (IJMES), Feb 12,2009

[11] Nitin S.Gokhale –practical Eliment Analysis.

[12] R.S.Kurmi, J.K. Gupta. A text book of machine Design,2007

[13] Autar K.Kaw. Mechanics of composite materials.2e,talor and Fancis Group,LLC,2006.

[14] R.K.Rajput. A Text book of strength of materials,2008

©IJRASET: All Rights are Reserved

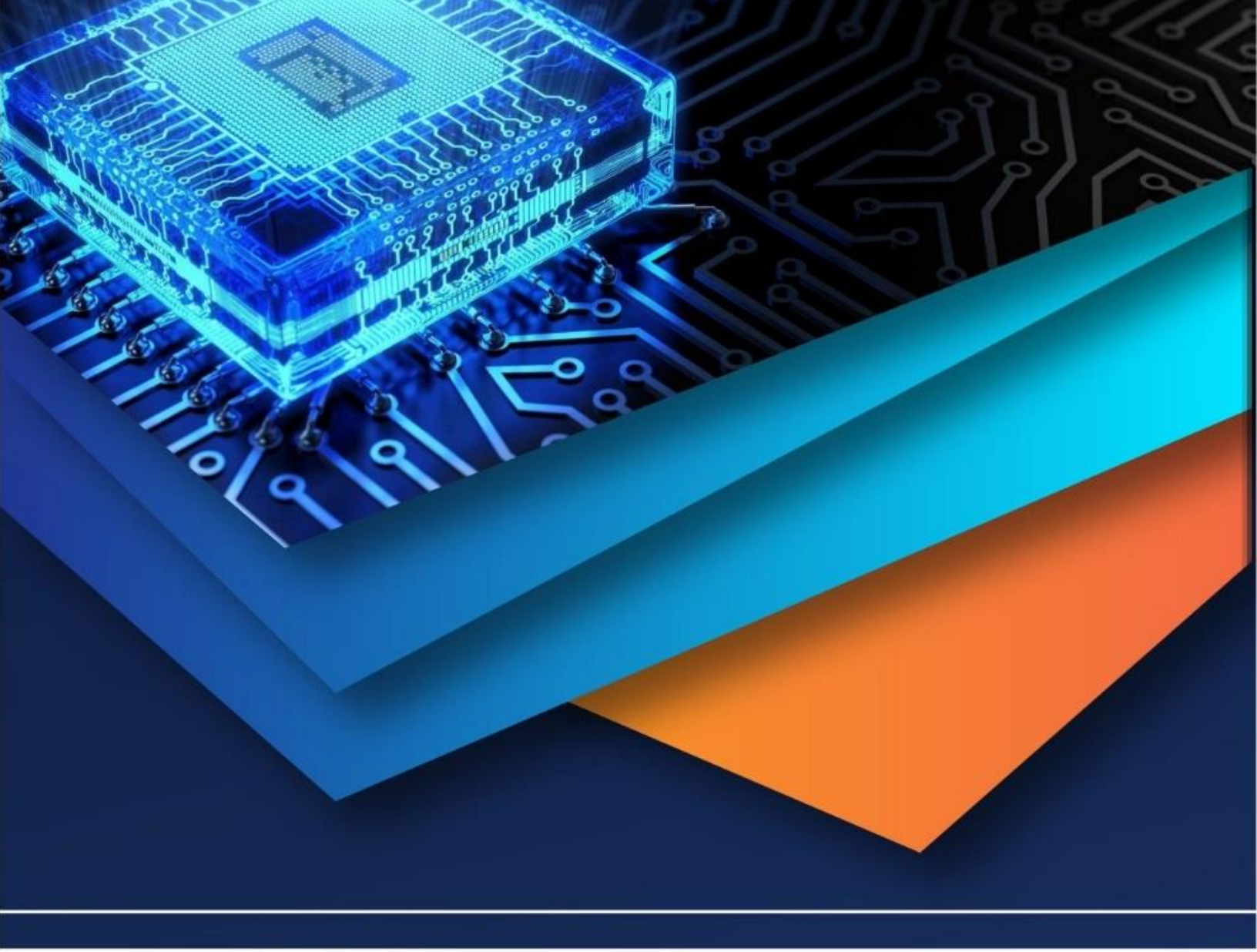

10.22214/IJRASET

45.98

IMPACT FACTOR: 7.129

IMPACT FACTOR: 7.429

INTERNATIONAL JOURNAL FOR RESEARCH

IN APPLIED SCIENCE & ENGINEERING TECHNOLOGY

Call : 08813907089 (24*7 Support on Whatsapp)