iJRASET
International Journal For Research in Applied Science and Engineering Technology



INTERNATIONAL JOURNAL FOR RESEARCH

IN APPLIED SCIENCE & ENGINEERING TECHNOLOGY

Volume: 5 **Issue:** VI **Month of publication:** June 2017

DOI:

www.ijraset.com

Call: 08813907089 | E-mail ID: ijraset@gmail.com

International Journal for Research in Applied Science & Engineering Technology (IJRASET)

Text and Sound Data Transfer Through Laser Using Arduino

Fakeeha Tabassum[1], Dr. Baswaraj Gadgay[2], Veeresh Pujari[3]
[1]*PG Student Dept. Of VLSI Design & Embedded Systems VTU PG Centre Kalaburagi*
[2]*Reasearch Guide & Professor VTU PG Centre Kalaburagi, Karnataka, India*
[3]*Assistant Professor VTU PG Centre Kalaburagi, Karnataka, India*

Abstract: ***In today's technology various methods are used for the communication. This paper mainly deals with transmitting serial information and sound file from one place to another via a laser beam. The prototype consist of Arduino uno, laser transmitter, keypad, SD card module, laser detector, earphone and lcd display. Arduino uno is a open source hardware. Text and sound data is transferred via a laser beam over a long distance without any loss of information. Laser communication provides a secure way to transmit the data. This prototype requires less cost and hence it is affordable. Communication through laser provides an effective means to transfer the data.***
Keywords— Arduino microcontrollers, laser transmitter, SD card module, laser detector, LCD display

I. INTRODUCTION

The other scientific discovery of the 20th century has not been demonstrated with so multiple applications as laser acronym for (Light Amplification by Stimulated Emission of Radiation)[1].Laser based communications provides many advantages such as it can be used in spacecraft .For high frequency of laser light optics required for communication will be small. Laser communication is not regulated like radio bands. Third, highly efficient and small technology is readily available for use by micro launcher developers at very low prices [2]. Laser Communication System works on the principle of "Amplitude Modulation" process .In this the abundancy of the bearer is fluctuated by the quick adequacy of the modulating signal (Input Signal).This basic Laser Communication System comprises of two areas Transmitter and Receiver. At the Transmitter any sound gadget can be coupled to the laser light by utilizing a transistor working in like manner authority mode. Because of this power of the laser bar changes corresponding to sound flag strength. At the beneficiary this fluctuating force can be detected by any optical sensors like Light Dependent Resistor (LDR) or photograph transistor or Solar cell. The photograph transistor is one-sided and associated with the contribution of sound enhancer (LM386) which drives the noisy speaker [3].Advances in framework engineering, information arranging and segment innovation in the course of recent decades have made laser correspondences in space feasible as well as an appealing methodology into inter satellite link applications .Most critical in space laser interchanges has been the improvement of a dependable, high power, single mode laser diode as a straightforwardly modulable laser source. This innovation propel offers the space laser correspondence framework planner the adaptability to outline extremely lightweight, high data transmission, ease correspondence payloads for satellites whose dispatch costs are an exceptionally solid capacity of dispatch weigh[4].It is not generally achievable to lay fiber lines when you require them with respect to amazingly long separations, for example, amongst satellites and earth thus laser correspondence has been to a great degree utilized for large distance[5]. The proposed system involves a very simple and cost-effective physical setup consisting of an Arduino uno, laser transmitter, keypad, SD card module, laser receiver, LCD display and earphone. To transfer message keypad is used to type the data and is transferred via a laser beam and to transfer sound flag, sound signal is stored in SD card module in wav format. Laser communication provides a secure way to communicate between transmitter and receiver.

II. RELATED WORK

Morio Toyoshima et aI., [6], The National Institute of Information and Communications Technology (NICT) has successfully conducted several laser communication experiments between geostationary earth orbit (GEO) and low earth orbit (LEO) satellites and optical ground stations. To date other organizations have also conducted many space laser communication demonstrations worldwide and the time has come when space laser communications can be used as operational systems. The NICT has recently carried out the first-ever successful data transmission from a 50-kg class micro-satellite via laser communication links. This paper presents recent activities on space laser communications in the NICT including the organization's future plans for next generation

©IJRASET: All Rights are Reserved

Volume 5 Issue VI, June 2017
ISSN: 2321-9653
International Journal for Research in Applied Science & Engineering Technology (IJRASET)

space laser communication research aiming to achieve 10 Gbps-class and 40 Gpbs-class laser communications at GEO and LEO distances.

Simon Bambey[7] , This paper proposes a basic and low cost microcontroller-based laser communication transceiver. It is capable of exchanging rates of approximately 0.7 kB/s. The hardware utilized for the transceiver comprises of Commercial Off-The-Shelf (COTS) lasers, photodiodes, and the Arduino Mega 2560. A Graphical User-Interface (GUI) using the Meteor framework is developed to encourage the communication between the user and transceiver. This transceiver transmits and receive the data without any loss of information .A secure communication is established between the transmitter and receiver side.This paper demonstrates that the laser communication provides an effective means of exchanging information.

III. PROPOSED METHOD

A simple laser communication (LC) system transmits serial data and audio signal through air from a transmitter to a receiver via a laser beam. The serial data or the sound signal is given to a transmitter via a keyboard or sd card module respectively. The UART of the arduino is responsible for sending and receiving data. On the transmit side, a UART must create the data packet appending sync and parity bits and send that packet out the Tx line with precise timing via a laser beam. On the receiver side, the laser detector will be high if signal is received otherwise will be low and that value is given to the UART of the Arduino, it has to sample the Rx line at rates according to the expected baud rate, pick out the sync bit and spit out the data. For the sound signal, the hex format value is send through the UART of the arduino, at the receiver side these hex values is converted into the sound wave through PWM. Hence a communication is been established via a laser beam. The output data can be seen on LCD display and sound can be heard through headphone. The block diagram for laser communication is as shown below

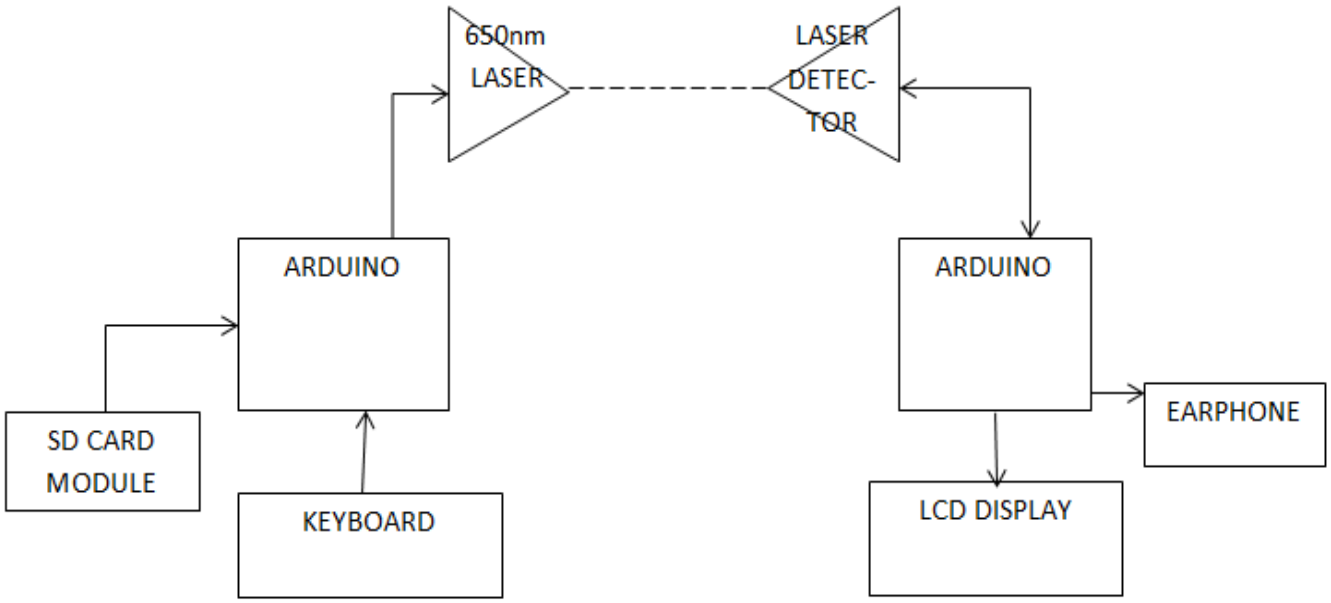

Fig. 1: Block diagram for laser communication

A. Arduino Uno

Act as a microcontroller, the central controller for the whole unit of smart cart. Arduino Uno based on the ATmega328. It has 14 digital input/output pins, 6 analog inputs, a 16 MHz quartz crystal, a USB connection, a power jack, and a reset button. The board can be programmed with Arduino Software (IDE). The board can operate on an external supply from 6 to 20 volts. If using more than 12V, the voltage regulator may overheat and damage the board. The recommended range is 7 to 12 volts. The ATmega328 has 32 KB flash memory. It also has 2 KB of SRAM and 1 KB of EEPROM.

©IJRASET: All Rights are Reserved

B. Laser Transmitter Module

The laser module used is KY-008 .It can be directly powered from an Arduino output pin as it only draws 30 mA from the processor that has outputs rated for 40 mA. The KY-008 Laser transmitter module consists of a 650nm red laser diode head and a resistor.The Operating voltage of laser module is 5V and the Wavelength is 650nm.

C. SD Card module

The Secure Digital Memory Card (SDC) is the de facto standard memory card for mobile devices. The SDC was developed as upper-compatible to Multi Media Card (MMC). SDC compliant equipment can also use MMCs in most cases. These cards have basically a flash memory array and a (micro)controller inside. The flash memory controls (erasing, reading, writing and error controls) are completed inside the memory card. The data is transferred between the memory card and the host controller as data blocks in units of 512 bytes; therefore, these cards can be seen as generic hard disk drives from the view point of upper level layers. Communication with an SD card can be done in one of two modes: the SD mode or the SPI mode. By default, the SD card operates in the SD mode. However, we'll work with the SPI mode and communicate with it using the SPI protocol. The high capacity SD Memory Card (SDHC) is More than 2GB and up to and including 32GB and the high voltage SD Memory Card Operating voltage ranges from 2.7-3.6 V.

D. Keyboard

Keyboard used in this project is 3×4 grid. Punch in your secret key into this numeric matrix keypad. This keypad has 12 buttons, arranged in a telephone-line 3x4 grid. It's made of a thin, flexible membrane material with an adhesive backing (just remove the paper) so it can attach it to nearly anything. The keys are connected into a matrix. It has 7 microcontroller pins(3 columns and 4 rows) to scan trough the pad. Its weight is 7.5 grams, keypad dimensions is 70mm ×77mm ×1mm(2.75" ×3" × 0.035") and Length of cable with connector is 85mm.

E. Laser Detector

A photodiode is a semiconductor device that converts light into current. The current is generated when photons are absorbed in the photodiode. A small amount of current is also produced when no light is present. Photodiodes may contain optical fibres, built-in lenses, and may have large or small surface areas. Photodiodes usually have a slower response time as their surface area increases. The sensor used is a non modulated laser receiver. The operating voltage is 5V.Output will be high when receiving laser signal and output will be low when receiving no signal.

F. LCD

A liquid-crystal display (LCD) is optical device that uses the light-modulating properties of liquid crystals. Liquid crystals do not emit light directly, instead using a backlight or reflector to produce images in color or monochrome. LCDs are used in a wide range of applications including computer monitors, televisions, instrument panels, aircraft cockpit displays, and indoor and outdoor signage. Small LCD screens are common in portable consumer devices such as digital cameras, watches, calculators, and mobile telephones, including smartphones. LCD screens are also used on consumer electronics products such as DVD players, video game devices and clocks. Results are displayed on LCD.

G. Earphone

Earphone is used to listen the sound track. It is connected to 3.5mm jack. The Arduino loads the .wav files from the micro-SD card. It then generates a signal and outputs it through the laser beam. Then the laser detector detects it and the sound is produced at the output jack. The .wav files used in this circuit have a slight limitation in playing audio. Since a transistor is used as an amplifier, it cannot read complex .wav files. The .wav files should have the 1600Hz samples per second, it should be mono type and should have 8 bits per sample.

IV. RESULTS

The data is transferred and is displayed on the LCD. The sound signal can be heard through the earphone. The transmitter and receiver side of the laser communication is shown in fig 2 and fig 3 respectively.

©IJRASET: All Rights are Reserved

Volume 5 Issue VI, June 2017
ISSN: 2321-9653
International Journal for Research in Applied Science & Engineering Technology (IJRASET)

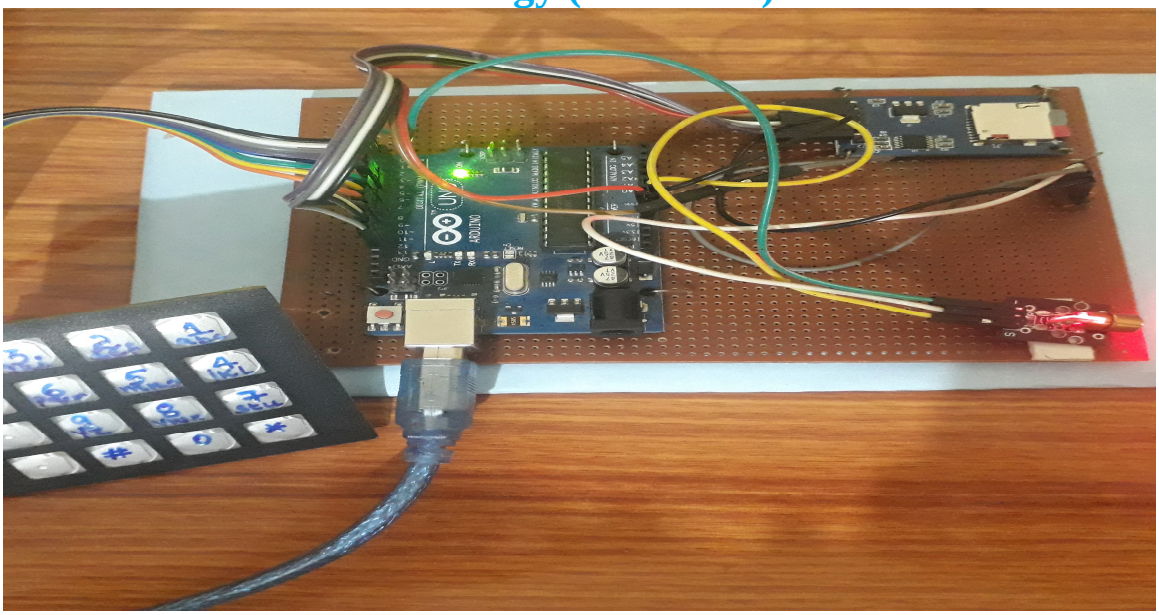

Fig 2. Transmitter side

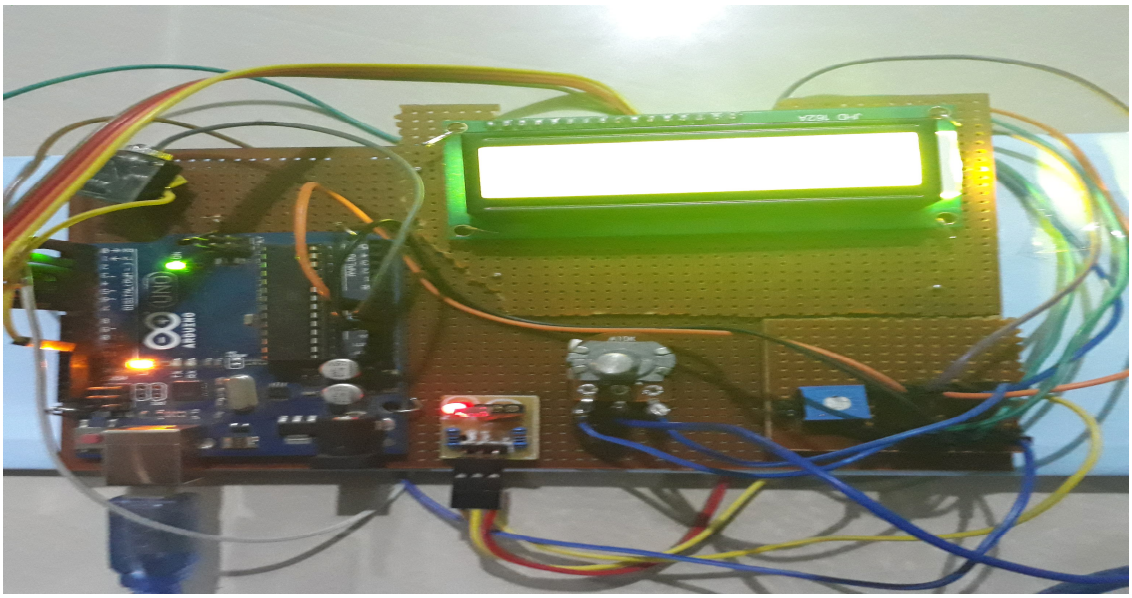

Fig 3. Receiver side

V. CONCLUSION

In this paper, the data is being sent from transmitter end to receiver end via a laser beam. By using keypad, the text is sent to the receiver side which is displayed on the LCD. By using SD card module the sound is sent via a laser beam to the receiver side which can be listened by using a headphone through a jack which is connected to arduino

REFERENCES

[1] "LASER AND ITS APPLICATIONS "Popular Science & Technology Series at https://www.drdo.gov.in/drdo/data/Laser%20and%20its%20Applications.pdf
[2] Ed LeBouthillier & Charles Pooley "LASER COMMUNICATIONS" copyright 2014 MICROLAUNCHERS at https://documents.mx/technology/laser-communications.htm
[3] http://electrofriends.com/projects/basic-electronics/laser-communication-system/
[4] http://www.seminarsonly.com/electronics/Laser%20Communication%20Systems.php

©IJRASET: All Rights are Reserved

Volume 5 Issue VI, June 2017
ISSN: 2321-9653

[5] Md.Samhan Seattle Pacific University EE 3550 Dr. Kevin Bolding November 2010 at http://lasercommunications.weebly.com
[6] M. Toyoshima, T. Fuse, D. R. Kolev, H. Takenaka, Y. Munemasa, N. Iwakiri, K. Suzuki, Y. Koyama, T. Kubooka, M. Akioka, and H. Kunimori, "Current status of research and development on space laser communications technologies and future plans in NICT," in Proc. IEEE Int. Conf. on Space Optical Systems and Applicat. (ICSOS), New Orleans, LA, 2015.
[7] Simon Bambey, Edward Lim, Kai Corley-Jory, and Pooya Taheri, "A Cost-Efficient Transceiver Prototype for Arduino-Based Laser Communication "Department of Computing Science & Information Systems Langara College Vancouver, BC, Canada 978-1-5090-0996-1/16/$31.00 ©2016 IEEE
[8] http://www.uchobby.com/index.php/2007/11/11/arduino-sound-part-1/
[9] http://www.atmel.com/dyn/resources/prod_documents/doc2542.pdf
[10] http://www.evilmadscientist.com/article.php/avrdac
[11] I. Harris, The Arduino platform and C programming. [Online]. Available: http://www.coursera.org/learn/arduino-platfom, [Accessed: 01-Jun-2016].

©IJRASET: All Rights are Reserved

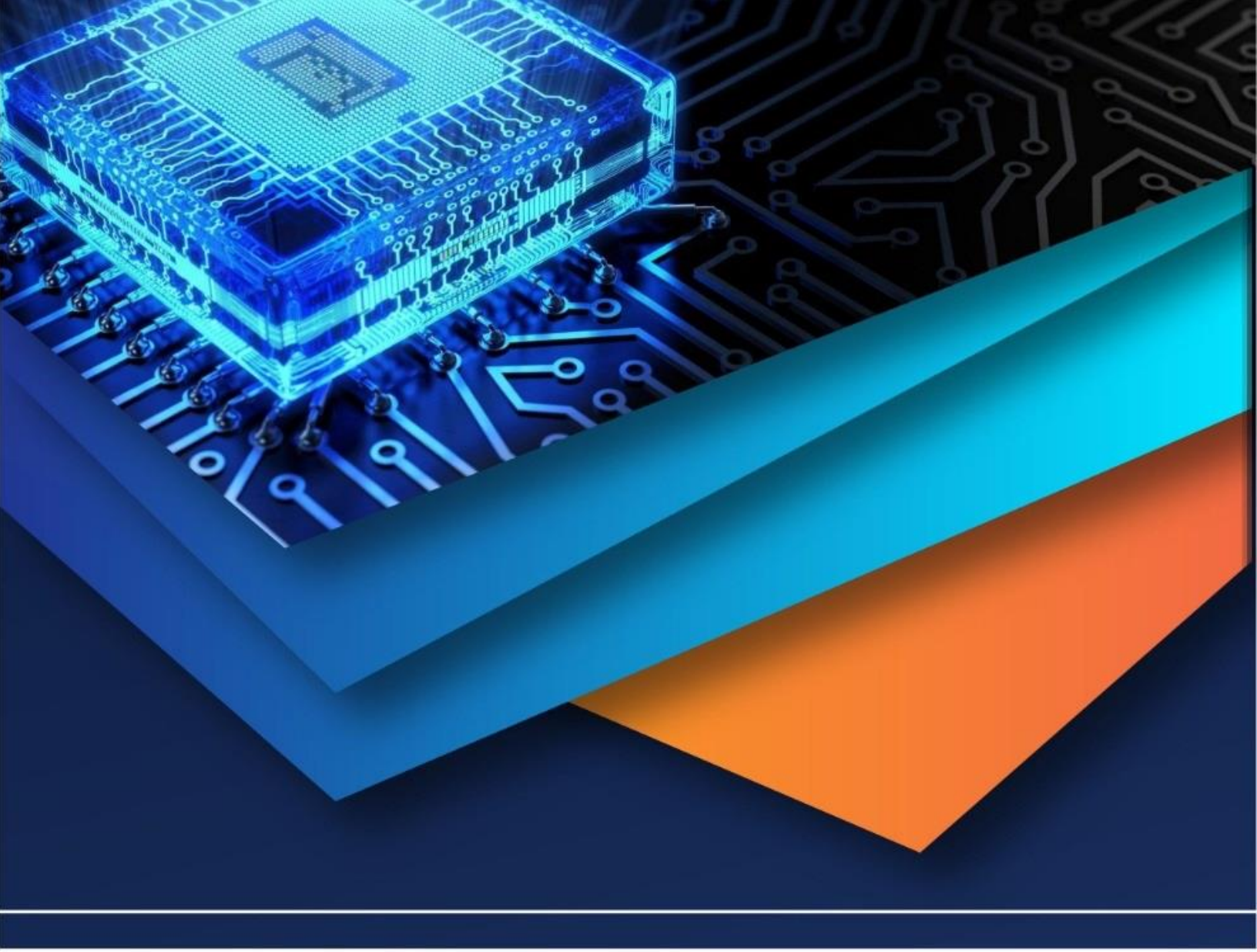

10.22214/IJRASET

45.98

IMPACT FACTOR: 7.129

IMPACT FACTOR: 7.429

INTERNATIONAL JOURNAL FOR RESEARCH

IN APPLIED SCIENCE & ENGINEERING TECHNOLOGY

Call : 08813907089 (24*7 Support on Whatsapp)