iJRASET
International Journal For Research in
Applied Science and Engineering Technology

INTERNATIONAL JOURNAL FOR RESEARCH

IN APPLIED SCIENCE & ENGINEERING TECHNOLOGY

Volume: 5 **Issue:** VI **Month of publication:** June 2017

DOI:

www.ijraset.com

Call: 08813907089 | E-mail ID: ijraset@gmail.com

Volume 5 Issue VI, June 2017
ISSN: 2321-9653
International Journal for Research in Applied Science & Engineering Technology (IJRASET)

Design and Analysis of Gas Turbine Blade

Sindhu N L[1], Dr. N Chikkanna[2]
[1]M. Tech Student, Dept. of Aerospace Propulsion Technology VTU, CPGS, Bengaluru Region VIAT, Muddenahalli, Chikkaballapur, India
[2]Professor and Chairman Dept. of Aerospace propulsion Technology VTU, CPGS, Bengaluru Region VIAT, Muddenahalli, Chikkaballapur, India

Abstract: In the present work the first stage rotor blade of a two stage gas turbine has been analysed for static structural, steady state thermal, modal and high cycle fatigue using ANSYS 17. An attempt has been made to investigate the effect of temperature and induced stresses on the turbine blade. A structural analysis has been carried out to investigate the stresses and displacements of the turbine blade which is been develop due to the coupling effect of thermal and centrifugal loads. A steady state thermal analysis has been carried out to investigate the direction of the temperature flow which is been develops due to the thermal loading. An attempt is also made to suggest the best material for a turbine blade by comparing the results obtained for three different materials such as Titanium Ti 6Al 4V, INCONEL 625 and N-155 that has been considered for the analysis. The turbine blade along with the fir tree joint is considered for the static structural, fatigue, thermal and modal analysis. The blade is modelled with CATIA V5. The geometric model of the blade profile is generated with splines and extruded to get a solid model.
Key words: Static structural, Steady state thermal, High cycle fatigue, Gas turbine blade.

I. INTRODUCTION

A Gas turbine is used as a prime mover for power generation in various fields of mechanical and aeronautical engineering. In gas turbine engine fuel is constantly burnt with compressed air to harvest a jet of hot, fast moving gas. These hot gases impinge on the turbine blade which will rotate the gas turbine. The gas turbine is spooled or coupled with compressor. The turbine uses the power generated to rotate compressor. The turbine extracts power by using the energy of combusted gases and air which is at high temperature and high
pressure by expanding through several stages of stator vanes and rotor blades. After compression, the air will be expanded in the turbine, then supposing that there were no losses in both the components, the power extracted by the turbine can be augmented by augmenting the volume of hot gases at continual pressure or alternatively increasing the pressure at continual volume. To get an elevated temperature of the working fluid, a combustion chamber is required where burning of air and fuel takes place giving temperature intensification to the working fluid. A gas turbine blade is the main part which makes the turbine division of a gas turbine. The blades are the main component accountable for extracting energy from high pressure, high temperature gas produced by the burner. Due to the huge amount of stresses produced on the turbine blade from the effect of centrifugal force (due to the rotation of turbine disc at high RPM) and the forces exerted by the hot gases on the turbine blade can cause yielding, fracture or creep failures. In addition to the forces exerted on the turbine blade, the first stage turbine of advanced engines will face temperatures of around 820 ^{o}C to 1,370 ^{o}C.

One of the most important and critical component of the gas turbine engine is turbine blade. The complete performance of the engine depends on the ability of turbine blade to extract energy from the hot gases. The major cause of failure in gas turbine engine is the breakdown of rotor blade. The failure of the rotor blade may lead to catastrophic consequences both physically and economically. Due to this a proper design must be done for gas turbine blade, which plays an important role in gas turbine engine.

II. LITERATURE SURVEY

L.Umamaheswararao et al. have investigated the stress distribution and temperature distribution on gas turbine blade and have stated in paper titled “Design and analysis of a gas turbine blade by using FEM”. In this paper the first stage rotor blade of a gas turbine has been analysed for structural, thermal analysis using ANSYS (Finite Element Analysis Software). The material used for the blade was specified as INCONEL 718. The thermal boundary conditions applied on the rotor blade are taken from the reference. The temperature distribution across the blade is obtained. The maximum stress up to which the blade can withstand is known and the stress distributions across the blade are obtained accordingly. The obtained results are compared with N-155, Mild Steel and the most suitable material is discussed. In final the actual fir tree model blade root compared with I-section model blade root,

©IJRASET: All Rights are Reserved

results are tabulated and it is observed that stress distribution less in fir tree model that the I-section model.

P.V.Krishnakanth et al. have summarized the design and analysis of Gas turbine blade in paper titled "Structural & Thermal Analysis of Gas Turbine Blade by Using F.E.M" in which CATIA V5 is used for design of solid model of the turbine blade with the help of the spline and extrudes options, ANSYS 11.0 software is used analysis of F.E. model generated by meshing of the blade using the solid brick element present in the ANSYS software itself and thereby applying the boundary condition. This project specifies how the program makes effective use of the ANSYS pre-processor to analyse the complex turbine blade geometries and apply boundary conditions to examine steady state thermal & structural performance of the blade for N 155, Haste alloy x & Inconel 625 materials. Finally stating the best suited material among three from the report generated after analysis. From this the results are stated and reported.

Barhm Abdullah Mohamad et al. have worked on paper with title "Failure analysis of gas turbine blade using finite element analysis" related to failure analysis of the turbine blade of a gas turbine engine 9E GE type, installed in a certain type of simple systems consisting of the gas turbine driving an electrical power generator. A non-linear finite element method was utilized to determine the stress state of the blade segment under operating conditions. High stress zones were found at the region of the lower fir-tree slot, where the failure occurred. A computation was also performed with excessive rotational speed. Attention of this study is devoted to the mechanisms of damage of the turbine blade and also the critical high stress areas.

Murali. K et al. have worked on the first stage rotor blade of the gas turbine in the paper titled with "Design and Fatigue Analysis of Turbine Rotor Blade by Using F.E.M". The first stage rotor blade of the gas turbine is analysed for the static and thermal stresses resulting from the tangential, axial and centrifugal forces. The gas forces namely tangential, axial were determined by constructing velocity triangles at inlet and exist of rotor blades. The rotor blade was then analysed for the temperature distribution. For obtaining temperature distribution, the convective heat transfer coefficients on the blade surface exposed to the gas have to feed to the software. After containing the temperature distribution, the rotor blade was then analysed for the combined mechanical and thermal stresses and also the fatigue life. Gas turbine is an important functional part of many applications. Reducing the stresses and increasing the fatigue life is the major concern since they are in high temperature environment. Various techniques have been proposed for the increase of fatigue life and one such technique is to have axial holes along the blade span. Finite element analysis is used to analyse thermal and structural performance due to the loading condition, with material properties of N155, NIMONIC 80A & INCONEL 600 We are analysed to find out the optimum number of holes for good performance. Counter plots for stresses for design 7 holes and for fatigue sensitivity it is found that when the number of holes of the blades is increased, the stresses are reduced and no. of Cycles are increased. Thus, the blade configuration with 7 holes of 2mm size is found to be optimum solution. This project specifies how the program makes effective use of the ANSYS workbench pre-processor to analysis the complex turbine blade geometries.

III. PROBLEM STATEMENT

Due to high centrifugal forces and high temperature working conditions the gas turbine blades are experiencing high stresses. Due to the high stresses in turbine blade there may be chance of failure or change in the shape of turbine blade. To prevent the failure or change in the shape of the turbine blade we should know the amount of stresses and deformation acting on the blade. The main intention of this work is to know the amount of stresses acting on the first stage gas turbine blade and to come up with an idea to minimize the stresses and increase the life of gas turbine blade. In the present work gas turbine blade has been analysed for static structural, fatigue, steady state thermal and modal analysis.

IV. PROJECT OBJECTIVE AND METHODOLOGY

A. Objective

1) To understand the loads acting on the turbine blade and to obtain the geometric details from the literature survey.
2) To model the geometry of gas turbine blade using the data obtained from literature review in CATIA V5.
3) To mesh the geometry of gas turbine blade and carryout modal, structural, thermal and fatigue analysis by applying boundary conditions obtained from literature review and validating the results with literature review results.
4) To optimise the design of gas turbine blade to reduce the stresses and analysing it for INCONEL 625, N-155 and Titanium alloy (Ti 6Al 4V).
5) Suggesting the better material for the gas turbine blade with respect to above three materials for optimised design of turbine blade.

©IJRASET: All Rights are Reserved

Volume 5 Issue VI, June 2017
ISSN: 2321-9653

B. Methodology

1) The geometry was created using commercially available CAD software CATIA V5.
2) The geometry was imported to Design modeller of Ansys Workbench V17.
3) The geometry was meshed using Mechanical of Ansys Workbench V17.
4) The boundary conditions were applied to the turbine blade which was obtained from literature review.
5) The results obtained were validated with literature review results.
6) Design of the turbine blade was optimised and analysed for three different materials with same boundary conditions.
7) The blade is analysed for Modal, Structural, Thermal and fatigue.
8) The best material is suggested for turbine blade in INCONEL 625, N-155 and Titanium alloy (Ti 6Al 4V).

V. GEOMETRY DETAILS

The gas turbine blade is modelled in CATIA V5. The model of gas turbine blade with firtree joint is considered for the analysis. The complete gas turbine blade geometry details are discussed below.

The gas turbine blade is modelled using X, Y and Z coordinate points. The file consisting of X, Y and Z coordinate points in .dxf file format is imported into CATIA. The X, Y and Z coordinates are shown in table I.

Key Point Number(Z=0)	Coordinate X	Coordinate Y
1	2.6	17.3
2	5.85	21
3	10	25
4	14.8	26.6
5	22.9	25.3
6	28	22.2
7	33.4	18.5
8	38	14.4
9	42	10.9
10	45.5	5.7
11	6.18	12.4
12	11.2	14.4
13	16.18	15.5
14	21.1	14.9
15	26	13.6

Table 1: Blade coordinates points

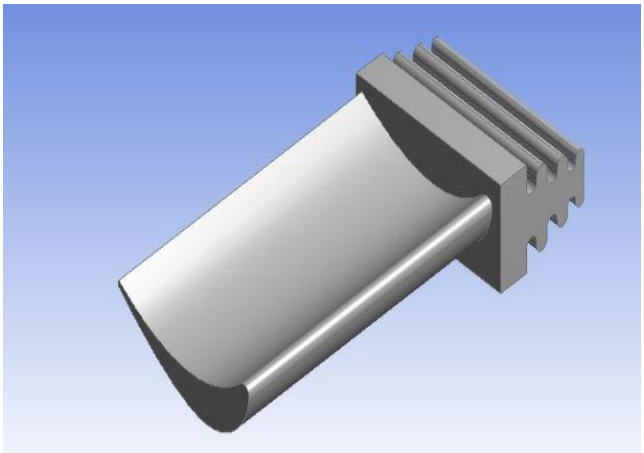

Figure 1: Optimised gas turbine blade with fir tree joint

©IJRASET: All Rights Reserved

Volume 5 Issue VI, June 2017
ISSN: 2321-9653

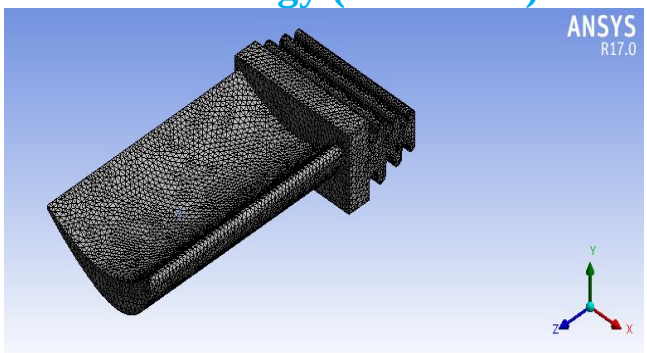

Figure 2: Meshed view of gas turbine blade

Statistics	
Nodes	112029
Elements	67728

Table 2: Meshing details of gas turbine blade

Material Property	Units	Ti 6Al 4V	Inconel 625	N 155
Density (ρ)	Kg/m^3	4620	8400	8249
Young's Modulus(E)	MPa	117.385E06	150E06	143E06
Poisson's Ratio(μ)	-	0.33	0.35	0.344
Tensile Yield Strength	MPa	880	1030	550
Thermal Conductivity(k)	ω/m-K	7.3	10	14.6

Table 3: Materials properties

VI. BOUNDARY CONDITIONS

To simulate the real time working conditions such as temperature, RPM and forces acting on the gas turbine blade, boundary conditions are given. The boundary conditions can be the magnitudes of force, RPM and temperature which are obtained by experiment or it can be the values obtained by theoretical calculations.

Axial force (F_a) = Mass flow rate of gas × (Vw1+Vw2)

Axial force (F_a) = 257.53 N

Tangential force (F_t) = Mass flow rate of gas × (Vf1-Vf2)

Tangential force (F_t) = 38.13 N

The centrifugal force (F_c) produced due the rotation of the gas turbine blade is taken as 9690 N (Ti 6Al 4V), 11562 N (Inconel 625) and 11025 N (N 155).

VII. RESULTS AND DISCUSSIONS

This Section of the work deals with the results of static structural, steady state thermal, modal and high cycle fatigue analysis done on optimised gas turbine blade. The objective of this project is to understand the behaviour of the gas turbine blade under the effect of temperature, RPM and forces for three different materials such as Titanium Ti 6Al 4V alloy, INCONEL 625 and N 155.

©IJRASET: All Rights Reserved

Volume 5 Issue VI, June 2017
ISSN: 2321-9653

A. Structural and Thermal Analysis

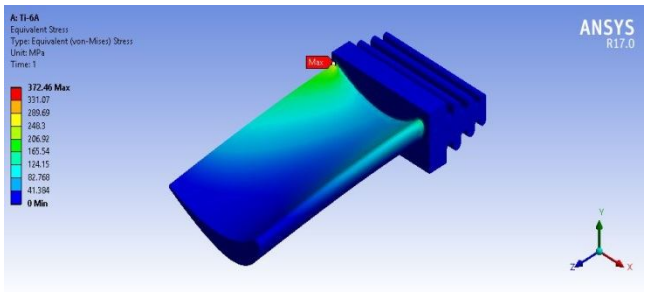

Figure 3: Von Mises stress of Titanium Ti 6Al 4V alloy

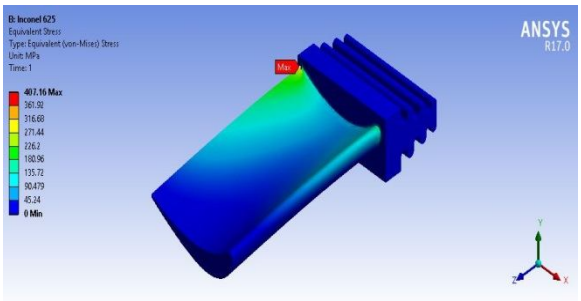

Figure 4: Von Mises stress of INCONEL 625

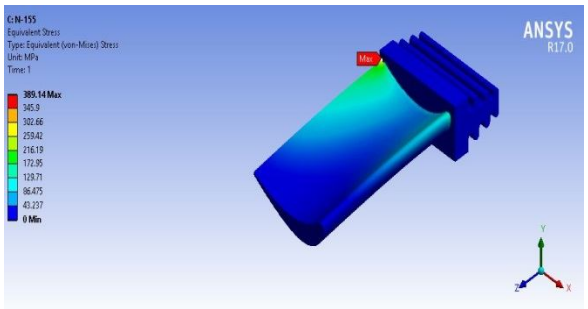

Figure 5: Von Mises stress of N 155

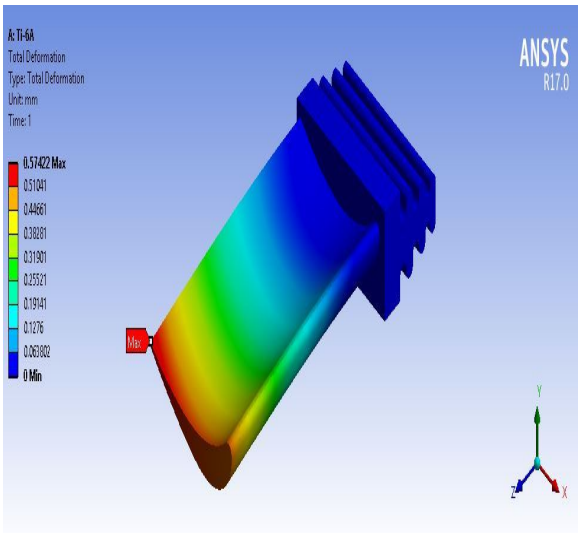

Figure 6: Total Deformation of Titanium Ti 6Al 4V alloy

©IJRASET: All Rights are Reserved

Volume 5 Issue VI, June 2017
ISSN: 2321-9653
International Journal for Research in Applied Science & Engineering Technology (IJRASET)

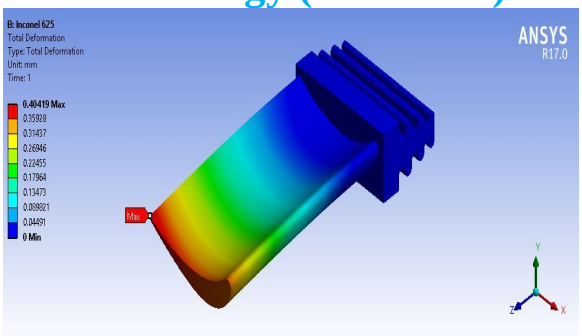

Figure 7: Total Deformation of INCONEL 625

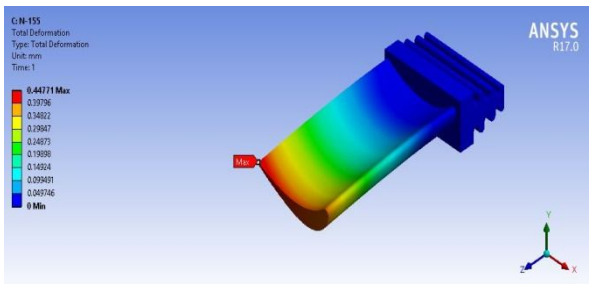

Figure 8: Total Deformation of N 155\

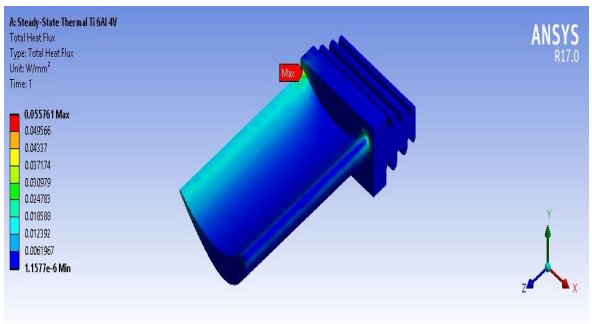

Figure 9: Total heat flux of Titanium Ti 6Al 4V alloy

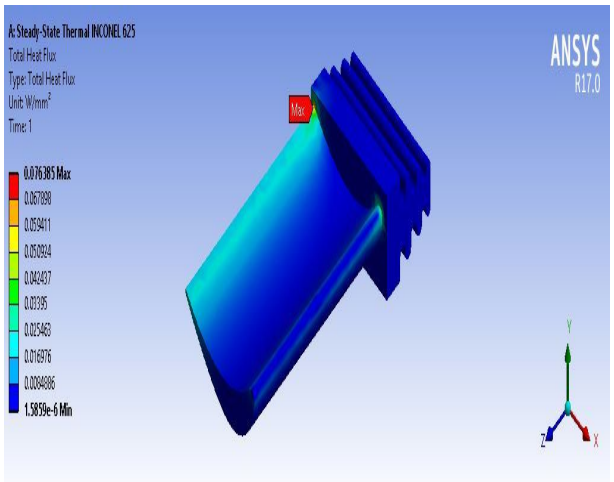

Figure 10: Total heat flux of INCONEL 625

©IJRASET: All Rights are Reserved

Volume 5 Issue VI, June 2017
ISSN: 2321-9653

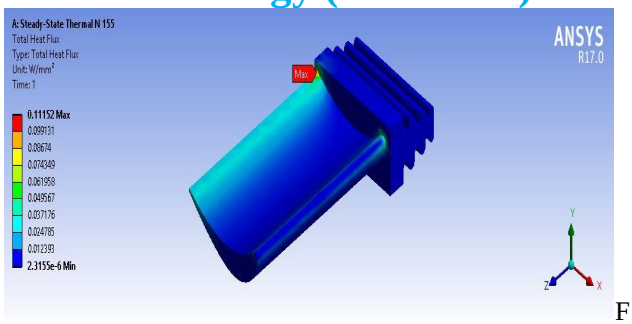

F

Figure 11: Total heat flux of N 155

Property	Ti 6Al 4V	INCONEL 625	N 155
Total Heat Flux (W/mm^2)	0.055761	0.076385	0.11152
Von Mises stress (MPa)	372.46	407.16	389.14
Total Deformation (mm)	0.574	0.404	0.447

Table 4: Comparison of steady state thermal analysis results

B. Fatigue Analysis

Material	Factor of safety
Ti 6Al 4V	1.5155
INCONEL 625	1.6065
N 155	1.4307

Table 5: Comparison of fatigue results

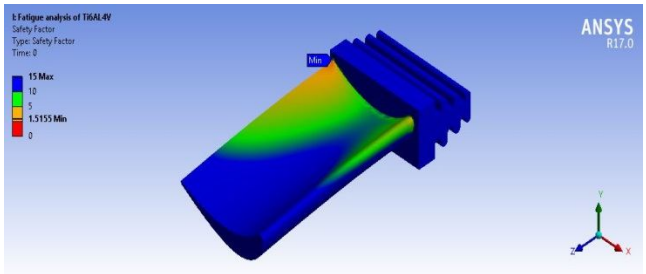

Figure 12: Factor of safety for Ti 6Al 4V

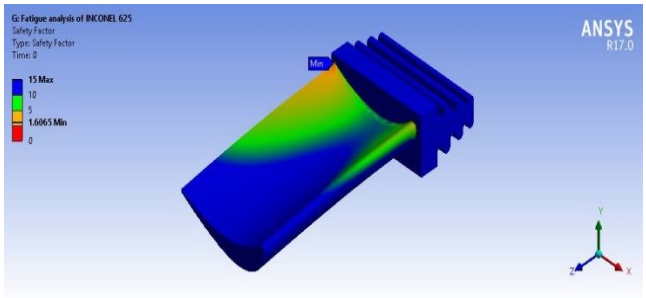

Figure 13: Factor of safety for INCONEL 625

©IJRASET: All Rights are Reserved

Volume 5 Issue VI, June 2017
ISSN: 2321-9653
International Journal for Research in Applied Science & Engineering Technology (IJRASET)

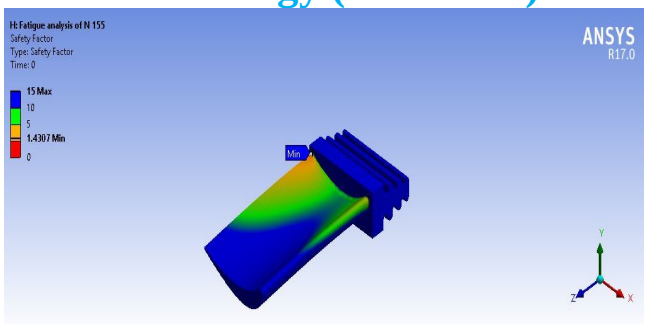

Figure 14: Factor of safety for N 155

VIII. CONCLUSION AND FUTURE SCOPE

A. *Conclusion*

In the current work three materials i.e Titanium T6-4Al-4V alloy, Inconel 625 and N 155 have been taken for the analysis. The various conclusions derived from the work are as follows:

1) The Von Mises stress of Inconel 625 is 407.16 MPa which way less than the tensile yield strength.
2) Deformation of Inconel 625 under loads is 0.404 mm which is less when compared to whole blade geometry.
3) The factor of safety of Inconel 625 is 1.6065 which greater than other two materials.
4) By observing all the results of Inconel 625, it is concluded that it is the best material for gas turbine blade when compared to other two materials.
5) When weight of the material is the primary issue then Ti 6Al 4V alloy is preferred due to its low density when compared to Inconel 625.
6) When cost is the primary issue then Inconel 625 is preferred.

B. *Future Scope*

1) Detailed study of different materials and alloys that can be used in gas turbine blade should be done.
2) Optimisation of gas turbine blade to increase the efficiency can be attempted.
3) Other type of blade cooling techniques can be investigated to obtain maximum efficiency.
4) Ceramics can be used to increase the turbine inlet temperature for high efficiency.

REFERENCES

[1] L.Umamaheswararao, Dr. K. Mallikarjunarao. “Design and analysis of a gas turbine blade by using FEM”, ISSN: 2278-621X, Vol. 4 Issue 4 November 2014 published by International Journal of Latest Trends in Engineering and Technology (IJLTET).
[2] P.V.Krishnakanth, G.Narasa Raju, R D V. Prasad, R. Saisrinu. “Structural & Thermal Analysis of Gas Turbine Blade by Using F.E.M”, ISSN 2278 – 0882, Volume 2 Issue2 pp 060-065 May 2013 published by International Journal of Scientific Research Engineering & Technology (IJSRET).
[3] Ahmed Abdulhussein Jabbar, A. K. Rai, P. Ravinder Reedy & Mahmood Hasan Dakhil. “Design and analysis of gas turbine rotor blade using finite element method”, ISSN(P): 2249-6890; ISSN(E): 2249-8001, Vol. 4, Issue 1, Feb 2014, 73-94, International Journal of Mechanical and Production Engineering Research and Development (IJMPERD).
[4] Barhm Abdullah Mohamad and Abdelsalam Abdelhussien. “Failure analysis of gas turbine Blade using finite element Analysis”, Article ID: IJMET_07_03_027, Volume 7, Issue 3, May–June 2016, pp.299–305. International Journal of Mechanical Engineering and Technology (IJMET).
[5] Nithin Kumar K C, Tushar Tandon, Praveen Silori and Amir Shaikh. “Structural Design and Analysis of Gas Turbine Blade using CAE tools”, ISSN: 2278-0181, Vol. 3 Issue 10, October- 2014, International Journal of Engineering Research & Technology (IJERT).
[6] S. Alka, Gunji Suresh and Simhachalam Naidu. “Modeling and Analysis on Gas Turbine Rotar Blade”, ISSN: 2277-3754, Volume 4, Issue 12, June 2015, International Journal of Engineering and Innovative Technology (IJEIT).
[7] Murali K and B Rambabu. “Design and Fatigue Analysis of Turbine Rotor Blade by Using F.E.M”, ISSN No: 2348-4845, Volume No: 2 (2015), Issue No: 4 (April), International Journal & Magazine of Engineering, Technology, Management and Research.
[8] K.Nehru and Dr.R. Asokan. “Low Cycle Fatigue Analysis Of Gas Turbine Blade”, Vol.6, No.1, National Journal on Advances in Building Sciences and Mechanics.
[9] www.asm.atweb.com
[10] www.azom.com
[11] www.efatigue.com
[12] M. Janecek, F Novy, P Harcuba, J Starasky, L Trsko, M Mhaede and L Wagner. “The Very hhigh Cycle Fatigue Behaviour of Ti 6Al 4V Alloy”, Vol 128 (2015), No 4, Proceedings of the iInternational Symposium on Physics of Materials (ISPMA13).

©IJRASET: All Rights are Reserved

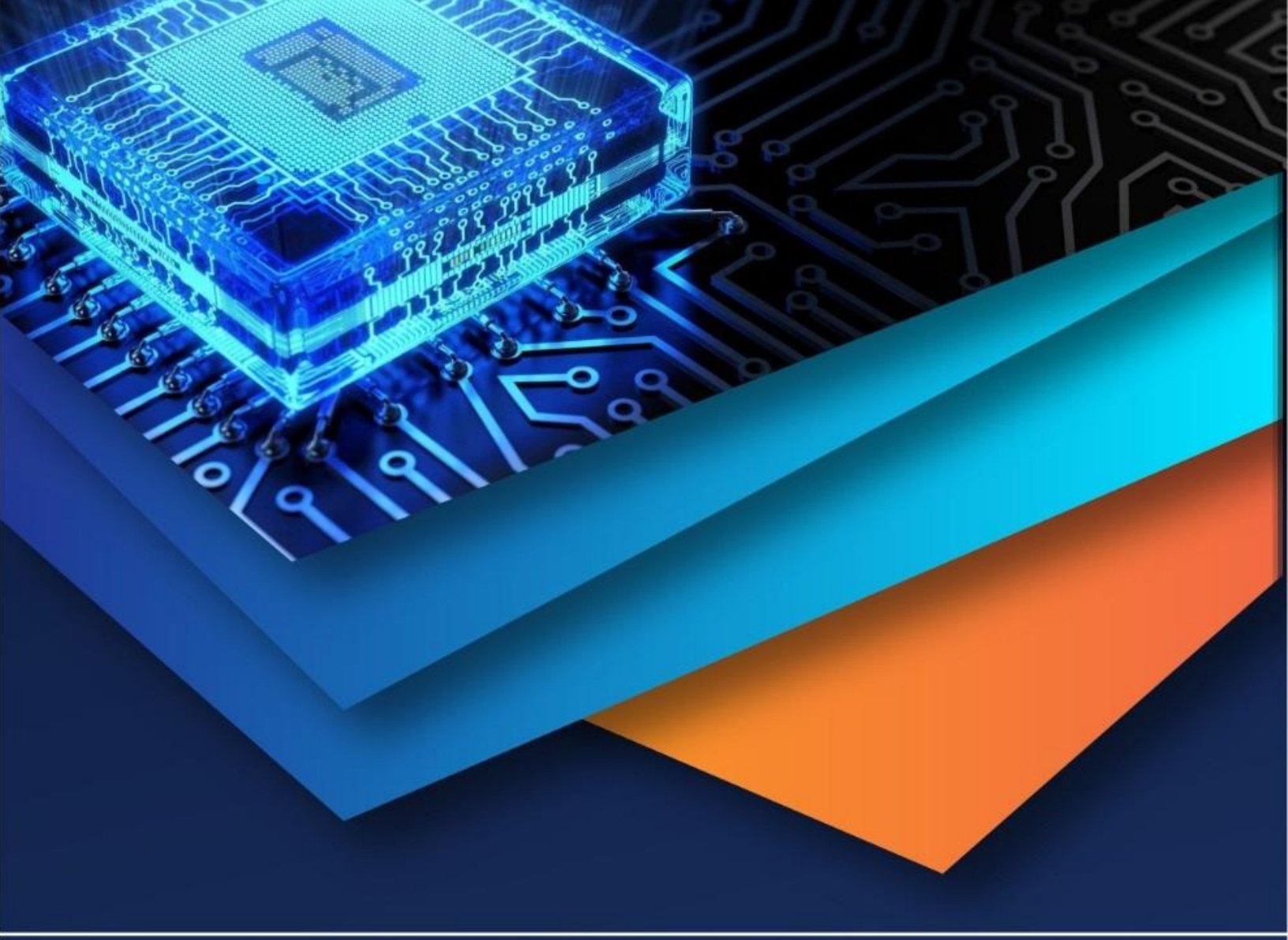

10.22214/IJRASET

45.98

IMPACT FACTOR: 7.129

IMPACT FACTOR: 7.429

INTERNATIONAL JOURNAL FOR RESEARCH

IN APPLIED SCIENCE & ENGINEERING TECHNOLOGY

Call : 08813907089 (24*7 Support on Whatsapp)