iJRASET
International Journal For Research in Applied Science and Engineering Technology

INTERNATIONAL JOURNAL FOR RESEARCH

IN APPLIED SCIENCE & ENGINEERING TECHNOLOGY

Volume: 5 **Issue:** IX **Month of publication:** September 2017

DOI: http://doi.org/10.22214/ijraset.2017.9024

www.ijraset.com

Call: 08813907089 | E-mail ID: ijraset@gmail.com

International Journal for Research in Applied Science & Engineering Technology (IJRASET)
ISSN: 2321-9653; IC Value: 45.98; SJ Impact Factor:6.887
Volume 5 Issue IX, September 2017- Available at www.ijraset.com

Quasi Impedance Source Inverter Based Active Filter for Flexible Grid Connection

Madasamy P [1], Ramadas K [2]
[1, 2]Assistant Professor, Department of Electrical and Electronics Engineering, Alagappa Chettiar College of Engineering and Technology , Karaikudi

Abstract: The main objective of this paper is to suppress harmonic and unbalanced reactive power to ensure the reliable operation of grid at the same time of grid-connection. Active filter (AF) has become the conventional technique of harmonic suppression, and the control method applied in the photovoltaic grid-connected system. The paper proposes an active filter integrated quasi Z source inverter applied in photovoltaic systems better, a flexible grid connection method based on direct power control. The main function of the proposed grid-connected photovoltaic generation system is supplying active power to grid, while that of AF device is harmonic suppression and reactive power compensation. The proposed method adopted grid power to control active filter directly, thus the detection of harmonics and reactive current of loads is omitted. The effectiveness of the proposed method proved through .simulation with MATLAB.
Keywords: Active filter, Flexible grid-connection, quasi Z source inverter, second order pulsating harmonics

I. INTRODUCTION

Renewable resources are the alternative resources for conventional energy resources and are in great demand nowadays. The traditional resources are reducing across the world rapidly. Solar photo voltaic generating electrical power from the alternative resources. Many research efforts are made to extract maximum power out of the Photo voltaic panel by using different power converters as most of the power generated by the renewable sources are varying. There are different traditional power circuit topological which has many disadvantages. The conventional Voltage Source Inverters and DC/DC converters have certain disadvantages such as double stage conversion, maximum output voltage obtained is less than the dc voltage, complexity in the controller circuits and the inverter components should be over sized to match with the continuous variation of Photo voltaic voltages which can be overcome by the proposed control topology of quasi impedance source inverter. The pv system is connected by implementation of the quasi impedance source inverter in which the output voltage can be controlled by both modulation index and the boost factor independently based on the open loop and closed loop simulation. This advantage makes Photo voltaic generation more efficient. Since the quasi impedance source inverter has the advantage of having no dead time.

To operate in one of the mode named shoot through mode either the same leg switches(upper leg and lower leg) are short switches ON so that short circuit occurs whereas in order to avoid the short circuit of the same leg as designed in the form of traditional VSI methods we are forced to make the dead time . The comparative analysis between impedance source and the quasi impedance source inverter were done to find out the best topology for the Photo Voltaic system. A traditional energy storage system usually requires an extra bidirectional dc–dc converter , which increases the system cost, volume, and control complication. Hence, an energy storage battery paralleled to the capacitor of quasi-Z-source network is presented, where the battery is directly connected to the quasi-Z-source capacitor, without any additional circuit, greatly simplifying the entire system..

II. REVIEW OF THE RELATED WORK

The world demand for clean, economical, and renewable energy has increased consistently. Among a variety of renewable energy sources, Photovoltaic (PV) power generation is one of the significant players in the world's energy collection and will become the biggest contributions to the electricity generation it is truly a clean, emission-free renewable electrical generation technology with high reliability was described by [1]. Grid interconnection of Photo Voltaic power generation system has the advantage of more effective utilization of generated power. The technical requirements from both the utility power system grid side and the Photo Voltaic system side need to be satisfied to ensure the safety of the Photo Voltaic installer and the reliability of the utility grid. Power converter topological employed in the photovoltaic (PV) power generation systems are mainly characterized by two-stage or single-stage inverters focused by[2] . The three-stage inverter is an attractive solution due to its compactness, low cost, and reliability. To overcome the abovementioned drawbacks, a Z-source inverter (ZSI) presents a new three-stage structure to achieve the voltage boost/buck character in a single power conversion stage, which has been reported in applications to PV systems .This type of converter can handle the PV dc voltage variations over a wide range without overrating the inverter.

©IJRASET (UGC Approved Journal): All Rights are Reserved

As a result the component count and system cost are reduced, with improved reliability due to the allowed shoot-through state. Recently proposed quasi impedance source inverters (QZSIs) have some new attractive advantages more suitable for application in PV systems described by[3]. Recently the quasi-Z source cascade multilevel inverter (QZS-CMI) and the energy stored three-phase QZS inverter (QZSI) are widely studied for photovoltaic (PV) power systems to handle wide variation of PV voltage described by[4]. The former consists of three-phase QZS H-bridge inverter module focused by[5], the latter integrates battery into QZS network to store abundant Photo Voltaic power and smooth its fluctuation in three-phase system described by[6].

When the battery-integrated QZS network is applied to three-phase QZSI module, the energy stored QZS-CMI has advantages of both QZS-CMI and energy stored system described by[7], also the energy stored single-phase QZSI possesses promising application in PV power systems. However, similar to traditional single-phase inverter, the second harmonic (2ω) pulsating power flows through the dc side of three-phase QZSI module, the QZS capacitors and inductors, which causes 2ω voltage ripple of dc-link of capacitors, and 2ω current ripple of inductors described by[8]. These 2ω ripples have to be minimized or at least restricted to an engineering tolerant range. Especially, for the energy stored single-phase QZSI , there will be rich 2ω ripple component introduced into battery current in spite that the 2ω ripple of QZS capacitor voltage is within the engineering tolerant range, because battery has very small internal resistance and a tiny second harmonic ripple voltage across it will cause a high 2ω ripple current flowing back and forth, which will considerably shorten the battery lifetime. There were several literature's working on 2ω ripple model and QZS network design for the three-phase QZSI, but the resultant capacitance and inductance were quite large described by[9] . A hybrid modulation controlled QZSI considerably reduced QZS impedance by utilizing 2ω ripple of dc-link voltage focused by [10] , whereas, the 2ω power still passes through the dc side of QZSI. A large dc capacitance is inventible at the dc input source to filter 2ω power and ensure the constant current of dc source; furthermore, the hybrid modulation method is not suitable for the energy stored single-phase QZSI due to the allowed low-frequency voltage ripple of QZS capacitors.

In the conventional three-phase inverter without any extra circuits, there will be no way to reduce its dc-link capacitance as small as one three-phase system, that is, to eliminate the 2ω ripple power described by[11]. Active ripple decoupling techniques, called active filter in this paper, have been explored to deal with the 2ω power in the traditional three-phase converters, by paralleling additional active energy storage devices to the dc link described by[12].

In similar way, the active filter method can help the three-phase QZSI to minimize the QZS capacitance and inductance with small ac capacitor storing 2ω power. The more importance is that, in theory, with this active filter, the 2ω components of dc side can be entirely eliminated, which is highly desirable for the energy stored three-phase QZSI. An active filter integrated three-phase QZSI topology to eliminate 2ω power ripple from dc side is proposed in[13].

The project proposes to make an active filter integrated quasi Z source inverter applied in photovoltaic systems better, a flexible grid connection method based on direct power control by [14]. The main function of the proposed photovoltaic grid-connection generation system is supplying active power to grid, while that of AF device is harmonic suppression and reactive power compensation. The proposed method adopted grid power to control active power filter directly, thus the detection of harmonics and reactive current of loads is omitted. The simulation and results is to be validated the effectiveness of the proposed.

III. DESCRIPTION OF PV SYSTEM

Photovoltaic (PV) cells, take advantage of the photoelectric effect to produce electricity. Each individual PV cell produces only 1-2 watts. To increase power output, cells are combined in a weather-tight package called a solar module. These modules (from one to several thousand) are then wired up in serial and/or parallel with one another, into what's called a solar array, to create the desired voltage and amperage output required by the given project. The silicon solar cell gives output voltage of around 0.7 V under open circuit condition. To get a higher output voltage many such cells are connected in series. The typical characteristic curve of a PV solar cell. The characteristics vary with solar insolation and temperature. The output power is directly proportional to the irradiance. As such, a smaller irradiance will result in reduced power output from the solar panel. However it is also observed that only the output current is affected by the irradiance. When the irradiance or light intensity is low, the flux of photon is less than when the sun is bright and the light intensity is high, thus more current is generated as the light intensity increases. The change in voltage is minimal with varying irradiance. Irradiance mainly affects the output current and the temperature mainly affects the terminal voltage.

IV. QUASI IMPEDANCE SOURCE INVERTER

To overcome the CSI and VSI disadvantages a new concept was developed by Dr. F.Z.Peng. Z-source inverter is a two-port network comprises of a split-inductor L1 and L2 and capacitors C1and C2 connected in X shape is employed to provide an impedance source

©IJRASET (UGC Approved Journal): All Rights are Reserved

(Z-source) coupling the converter (or inverter) to the dc source, load, or another converter. This new concept involves the combination of VSI and CSI to form an Impedance Network. The unique impedance network (or circuit) is used to couple the converter main circuit to the power source, load, or another converter. The theoretical barriers and limitations of the traditional V-source and I-source converter are overcome by the Z-source converter and it furnishes a novel power conversion. The Z-source concept is applied to all power conversion needed in fuel cell application. The figure shows the circuit diagram of Quasi Z source Inverter.

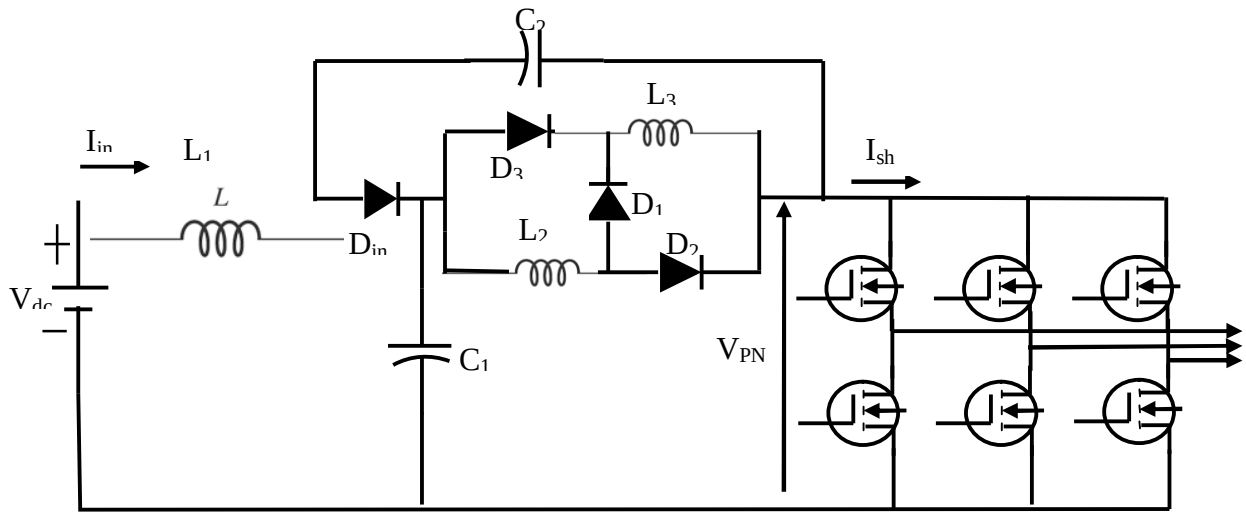

Fig.1. Circuit diagram of quasi z source inverter

The quasi z-source inverter (QZSI) is derived from the Z-source inverter topology, employing a unique impedance network. The conventional VSI and CSI triggers two switches in the same leg or phase leads to short a source, the maximum obtainable output voltage cannot exceed the dc input. These drawbacks are overcome by Z-source inverters and quasi-Z-source inverters by using several shoot-through zero states. To maintain the six permissible active switching states of a VSI, the shoot through states replaces the zero states depending upon the voltage boost requirement. The impedance network matches the source and the inverter to boost up the voltage and to obtain inversion in a single stage. By using this new topology, the inverter draws a constant current from the PV array ; it is capable of handling a wide input voltage range; it requires less rating of component, PV panel switching ripples ,EMI problems and source stress are reduced compared to the traditional ZSI.

V. ACTIVE FILTER

The series-shunt active filter is a combination of the series active filter and the shunt active filter. The shunt active filter is located at the load side and can be used to compensate for the load harmonics. On the other hand, the series portion is at the source side and can act as a harmonic blocking filter. Multilevel inverters are being investigated and recently used for active filter topologies Three-level inverters are becoming very popular today for most inverter applications, such as machine drives and power factor compensators. The advantage of multilevel converters is that they can reduce the harmonic content generated by the active filter because they can produce more levels of voltage than conventional converters (more than two levels). This feature helps to reduce the harmonics generated by the filter itself. Shunt Active Power Filters (Shunt APFs) represent the most important and most widely used filters in industrial purposes, this is due not only to the fact that they eliminate the Harmonic current with a neglected amount of active fundamental current supplied to compensate system losses, but also they are suitable for a wide range of power ratings. Modern power electronic devices such as IGBTs allowed to configure non harmonic generating shunt APFs. Shunt active power filters (APF) are commonly used for the reduction of current harmonics and improvement of the power factor in power systems with nonlinear loads, such as diode rectifiers. A pulse width modulation (PWM) power converter constitutes the main component of the APF. The low-order harmonics of the line current are attenuated, but the switch-mode operation of the converter results in electromagnetic interference (EMI) spreading to the grid. Specifically, clusters of harmonics appear in the frequency spectra of voltages and currents of the converter at multiples of the switching frequency.

VI. PROPOSED CONTROL STRATEGY

©IJRASET (UGC Approved Journal): All Rights are Reserved

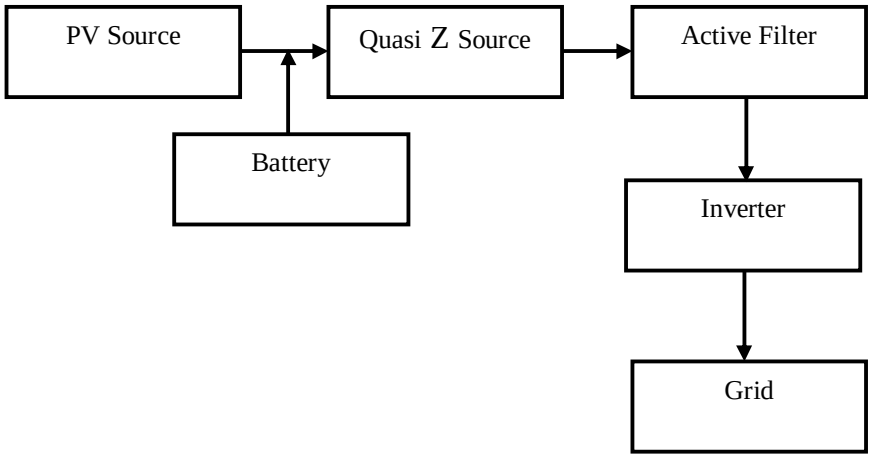

Fig. 2. Proposed System

The PV array is connected to quasi z-source network. The DC voltage is generated from the PV Array and it is fed to quasi-Z Source network. Quasi-Z-Source network is derived from the traditional Z-Source network and it contains special arrangement of inductor and capacitor components. The quasi z-source network is boost or bucks the PV output voltage depending on micro grid voltage. Voltage Source Inverter is one in which the DC source has negligible impedance and it has a large capacitor to make the input DC voltage constant. It incorporates LC circuit to mitigate the ripple components and capacitor to suppress the harmonics. The pulse generator generates the trigger pulse; MOSFET requires gate pulses to trigger on. Battery is connected to capacitor, draws a constant dc current and voltage. This type of converter can handle the PV dc voltage variations over a wide range without overrating the inverter. The less component are used so the system cost is reduced, with improved reliability due to the allowed shoot-through state. The q-ZSI draws a constant current from the PV panel, and does not require extra filtering capacitors. The energy-stored q-ZSI topology where the battery is connected in parallel with the capacitor. Whereas in the proposed system the battery is connected as shown in Figure.1.The proposed model is optimized for direct load applications, it primarily focuses on the uninterrupted power supply to the connected load. It has three different cases in doing so, they are: the power is generated by the PV panel is used to support the load and to charge the battery. The battery supports the load if PV panel power becomes insufficient. The load is supplied with the AC mains if both PV panel power and battery power become insufficient. With the proposed single-phase qZSI topology, the 2ω pulsating power of single-phase ac load is directly transferred to the ac capacitor, through the inductor and the phase legs 3 and 2. Thus, the2ω power will never flow through dc side of single-phase qZSI. As a result, the capacitor voltage and the inductor current in dc side will no longer have 2ω ripple. For the constant qZS capacitor voltages and constant inductor average currents, we no longer need large impedance, because small qZS capacitance and inductance are enough to take care of high-frequency ripple, so as to small volume and weight of passive components. Also, the constant capacitor voltage will make sure the constant battery current when the battery is connected in parallel to the qZS capacitor $C1$ or $C2$ in the energy stored qZSI system, which will benefit the battery with long life time.

VII.RESULTS AND DISSCUSSION

In this mode, the load demand must be furnished by both the PV and the battery. The load power variations make the battery power vary accordingly to supply the load power demand, while the PV power is constant. The quasi z-source inverter in output voltage shown in figure.4.The PV voltage is increased or decreased by using quasi z- source inverter. The quasi z-source inverter output voltages depend upon micro grid voltage .The Variation of the battery current and output voltage in grid-connected mode shown in figure.6. In the grid-connected mode of micro grid operation, the battery charging current reference is initially set to 30 A, while at t = 0.1 s, the battery current reference is changed to discharging current of 5 A. At t = 0.2 s, the battery current reference is again changed to the charging current of 30 A. Moreover, the PV voltage is set to 200 V generating 5 kW power. The Micro grid voltage experiences a smooth transition when the operation mode is change. The sinusoidal voltage of the micro grid the effectiveness of the proposed control system when the PV system is disconnected from the HPCS. To compare the active filter's ability to absorb 2ω power, firstly we disable the active filter The active filter to absorb 2ω the power ripple. Simple boost control modulates the qZSI, and the open loop control performs constant voltage output to *RL* load through H-bridge inverter, as shown in Fig.8. It can be seen that the 2ω power ripple causes high 2ω ripple of both capacitor and dc link voltages, which result

©IJRASET (UGC Approved Journal): All Rights are Reserved

in the distorted inverter output current; also there is high 2w ripple of inductor current, which even causes the qZSI into discontinuity at reaching zero current. From Figs.3-7, it can be seen that the proposed inverter removes 2ω power from dc side through using active filter with switching the third phase leg, and the qZS inductor current, qZS capacitor voltages, and dc-link peak voltage are constant no matter what level of load. Therefore, the qZS inductance and capacitance have significant reduction when compared to the existing topology due to just limiting high-frequency ripple. Moreover, the active filter capacitor supports high fluctuated ac voltage and small capacitance is enough to store the 2ω power.

In this mode, the load demand must be supplied by both the PV and the battery. As can be Seen in this figure 3. The load power variations make the battery power vary accordingly to supply the load power demand, while the PV power is constant.

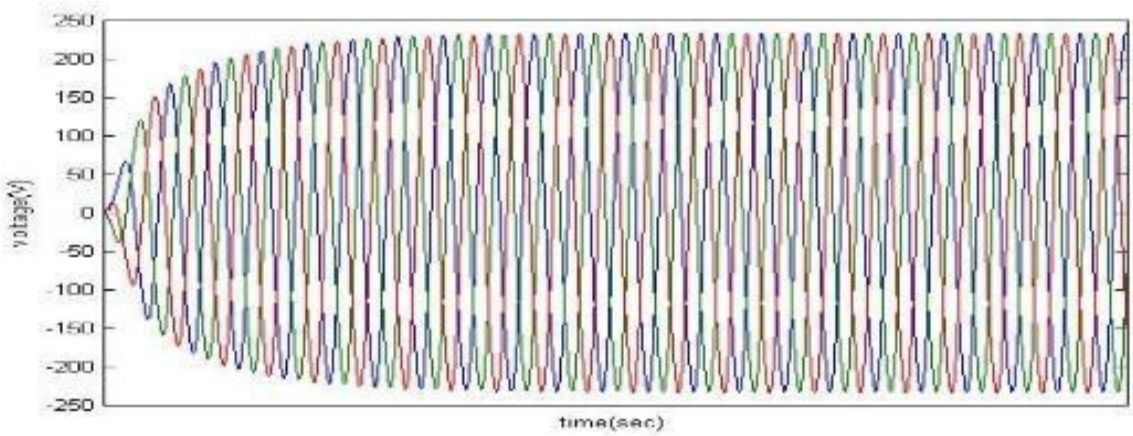

Fig.3. QZSI Voltage Curve

The PV voltage is increased or decreased by using quasi z- source inverter. The quasi z-source inverter output voltage depends upon grid voltage in figure 3.

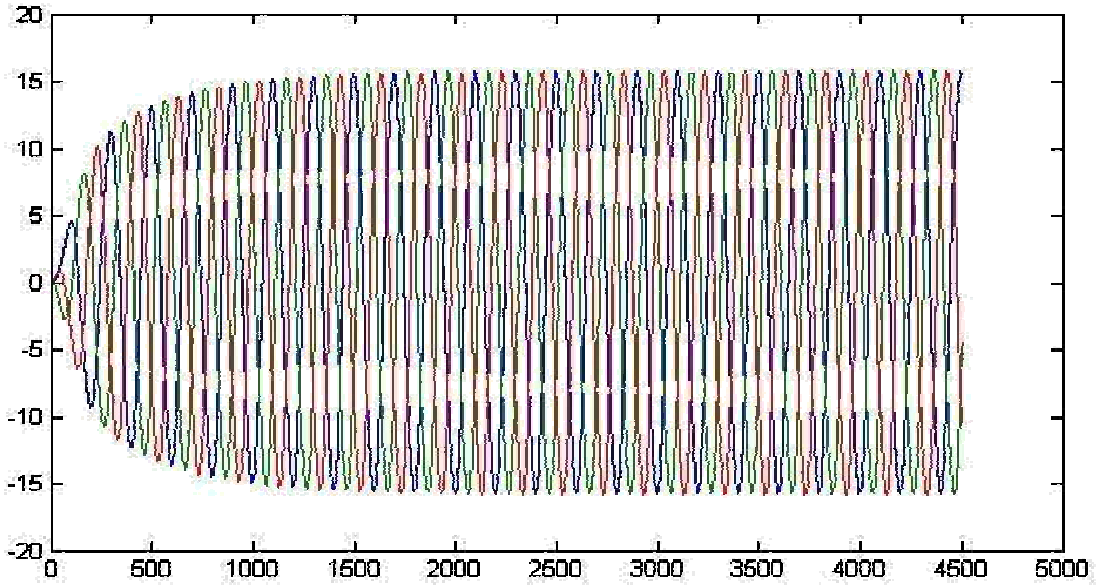

Fig.4

.QZSI Current Curve

The battery supplies the load demand. The increase in load demand leads to appropriate increase in the battery current in figure 4 Grid voltage experiences a smooth transition when the operation mode is change. The sinusoidal voltage of the micro grid he effectiveness of the proposed in figure 5.

©IJRASET (UGC Approved Journal): All Rights are Reserved

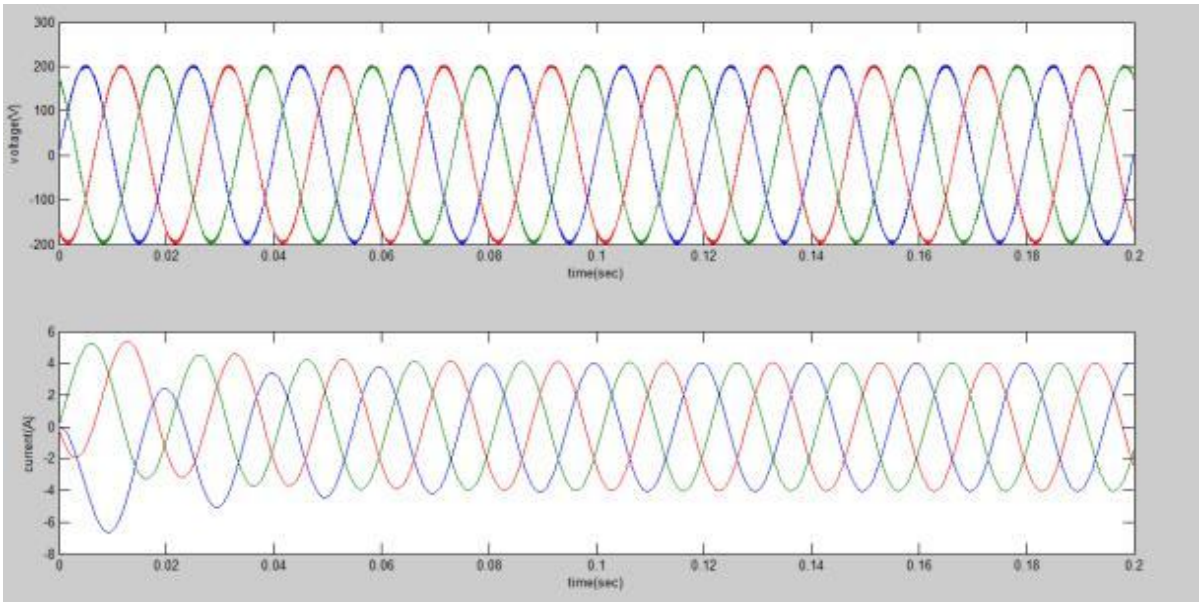

Fig.5.Varaiation Battery Current in Grid Connected Mode

When the PV is connected to the three phase QZSI without the filter, then the FFT analysis of the system in figure 6

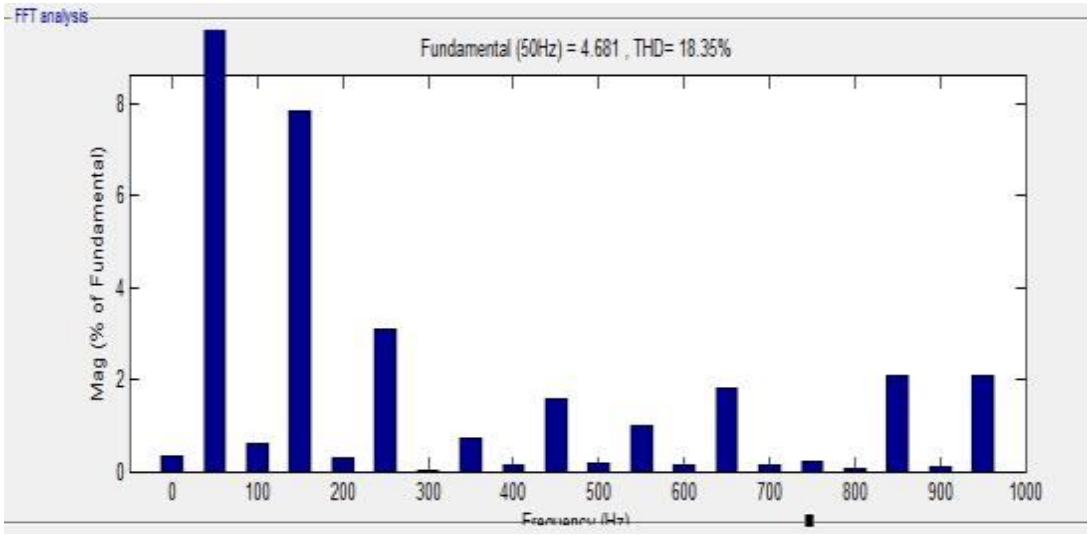

Fig.6.FFT analysis without filter

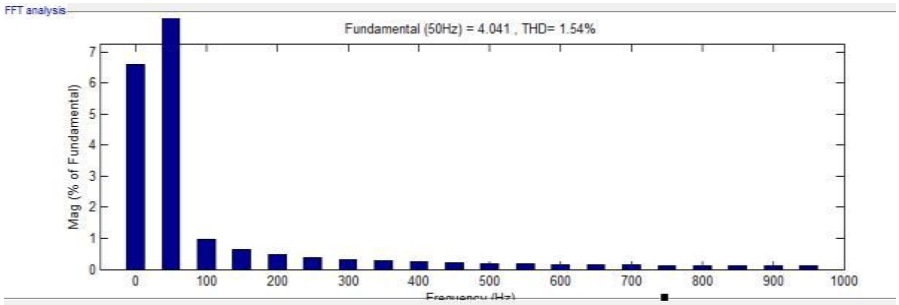

Fig7.FFT analysis with filter

When the PV is connected to the three phase QZSI with the filter ,then the FFT analysis of the system in figure 7

©IJRASET (UGC Approved Journal): All Rights are Reserved

VIII. CONCLUSION

An active filter integrated three-phase qZSI was proposed to eliminate the 2ω power ripple of dc side and significantly reduce the qZS inductance and capacitance. The control method was proposed on the basis of circuit modeling to ensure the active filter absorbing entire 2ω power from the load side. Constant dc-link peak voltage, constant capacitor voltage, and constant qZS inductor average current were achieved in spite of much small qZS capacitance and inductance, which were only used to limit high frequency voltage and current ripple, respectively. Comparative evaluation, simulation, and experimental results demonstrated the validity of the proposed active filter integrated single-phase qZSI system. Without the complex detection and calculation of harmonic current and compensation current, the Quasi-Z source photovoltaic power generation system controls the power of grid directly. Combining the voltage-stabilizing control loop of DC bus with the constant switching frequency power loop, harmonics can be suppressed at the same time of grid-connection. and X. He, (2011), "Review of nonisolated high-step-up

REFERENCES

[1] W.Li and X.He.(2011), "Review of nonisolated high-step-up DC/DC Converteer in photovoltaic grid-connecteed applications, IEEE Trans. Ind. Eletronics, Vol58, No.4,pp

[2] Mohamed A. Eltawil and Zhengming Zhao, (2010), "A review of Grid-connected photovoltaic power systems: Technical and potential Problems", IEEE Trans. Ind. Electron., vol. 58, no. 4, pp. 112–129

[3] F. Z. Peng, (2003), "Z source Inverter", IEEE Transactions on Industry Applications, Vol.39, No.2, pp.504-510.4

[4] B. Ge, H. Abu-Rub, F. Z. Peng, Q. Lei, de Almeida A., Ferreira F., D. Sun, Y. Liu, (2013), "An energy stored quasi-Z-source inverter for application to photovoltaic power system", IEEE Trans. Ind. Electron., vol.60, no.10, pp.4468-4481.

[5] D. Sun, B. Ge, F. Z. Peng, H. Abu-Rub, D. Bi, Y. Liu, (2012), "A new grid-connected PV system based on cascaded H-bridge quasi-Z source inverter", 2012 IEEE International Symposium on Industrial Electronics (ISIE), pp.951-956, 28-31.

[6] B. Ge, F. Z. Peng, H. Abu-Rub, F.J.T.E. Ferreira, A.T. de Almeida,(2014), "Novel energy stored single-stage photovoltaic power system with constant DC-link peak voltage", IEEE Trans. Sustain. Energy, vol.5, no.1, pp.28-36.

[7] D. Sun, B. Ge, W. Liang, H. Abu-Rub, F. Z. Peng,(2015), "An energy stored quasi-Z-source cascade multilevel inverter-based photovoltaic power generation system," IEEE Trans. Ind. Electron., vol.62, no.9, pp.5458-5467.

[8] Y. Yu, Q. Zhang, B. Liang, and S. Cui, (2011), "Single-phase Z-source inverter: analysis and low-frequency harmonics elimination pulse width modulation," in Proceeding of Energy Conversion Congress and Exposition, Phoenix, USA, pp. 2260-2267.

[9] Y. Liu, B. Ge, H. Abu-Rub, D. Sun, (2015), "Comprehensive modeling of single-phase quasi-Z-source photovoltaic inverter to investigate low-frequency voltage and current ripple," IEEE Trans. Ind Electron, vol.62, no.7, pp.4194-4202..

[10] Y. Liu, B. Ge, H. Abu-Rub, H. Sun,(2013) "Hybrid pulsewidth modulated single-phase quasi-Z-source grid-tie photovoltaic power system," IEEE Trans. Ind. Informat., vol.12,pp.621-632.

[11] G. Zhu, H. Wang, B. Liang, S.-C. Tan, J. Jiang, (2016), "Enhanced single-phase full-bridge inverter with minimal low-frequency current ripple," IEEE Trans. Ind. Electron., vol.63, no.2, pp.937-943.

[12] Y. Sun,Y. Liu, M. Su, W. Xiong, J. Yang, (2016), "Review of active power decoupling topologies in single-phase systems," IEEE Trans. Power Electron., vol.31, no.7, pp.4778-4794.

[13] B. Ge, Y.Liu, H.Abu-Rub,Robert S.Balog, F. Z.Peng, Hexu Sun X.Li, (2015), "An Active Filter Method to Eliminate DC-Side Low-Frequency Power for Single-Phase Quasi-Z Source Inverter," IEEE Trans. Ind. Electron., vol.63,pp.4838-4848.

[14] Yuxun Luo,Zhiyong Li, Xingyao He and Xuexiu Zeng,(2014) 'Flexible Grid--Connected technique of quasi z source photovoltaic power Generation system based on direct power control," School of Information Science and Engineering, Central South University, Changsha, Hunan,vol.63, pp,4971-4978.

©IJRASET (UGC Approved Journal): All Rights are Reserved

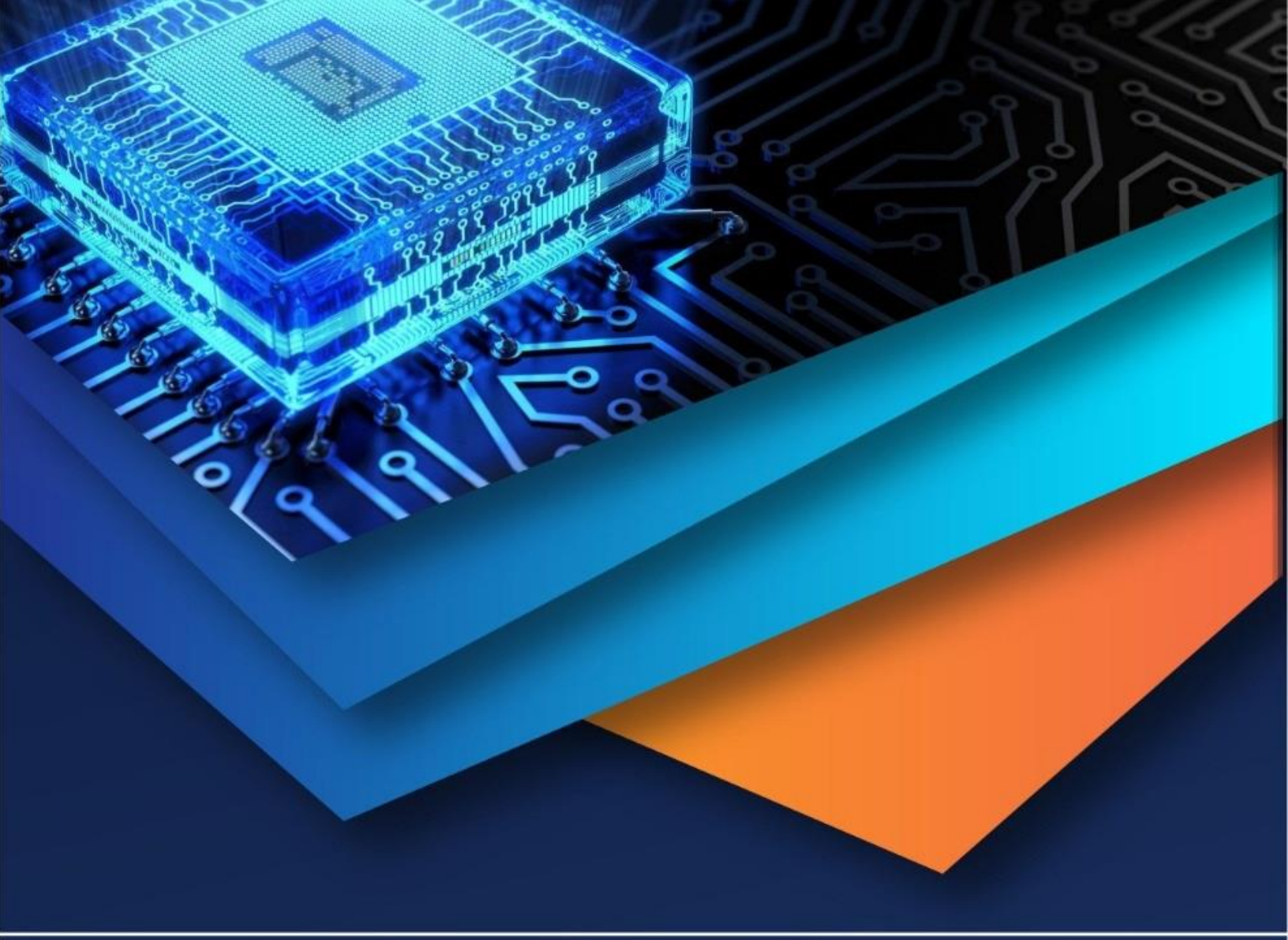

10.22214/IJRASET

45.98

IMPACT FACTOR: 7.129

IMPACT FACTOR: 7.429

INTERNATIONAL JOURNAL FOR RESEARCH

IN APPLIED SCIENCE & ENGINEERING TECHNOLOGY

Call : 08813907089 (24*7 Support on Whatsapp)